DOE/EA-1798

TECHNICAL APPENDICES

FINAL ENVIRONMENTAL ASSESSMENT

FOR

DEPARTMENT OF ENERGY LOAN GUARANTEE TO MOJAVE SOLAR, LLC FOR THE ABENGOA MOJAVE SOLAR PROJECT NEAR BARSTOW, CALIFORNIA

U.S. Department of Energy
Loan Guarantee Program Office
Washington, DC 20585

July 2011

APPENDICES

Appendix		Pages
A	Record of Public Contact	A-1 – A-30
B	Interconnection System Impact Study	B-1 – B-62
C	Southwest Gas Corporation Correspondence	C-1 – C-4
D	Solar Plant Details	D-1 – D-36
E	Water Regulations, Hydrology Report, DESCP, and SWPPP	E-1 – E-26
F	Southern California Edison Lockhart Substation Project Description for Abengoa Solar, Inc.	F-1 – F-72
G	Land Use	G-1 – G-6
H	Visual	H-1 – H-16
I	Air Quality	I-1 – I-272
J	Noise	J-1 – J-6
K	Geology and Soils	K-1 – K-2
L	Paleontology Study	L-1 – L-28
M	Biological Resources	M-1 – M-146
	M-1 Desert Tortoise Clearance and Relocation/Translocation Plan	M-13 – M-58
	M-2 Common Raven Monitoring, Management, and Control Plan	M-59 – M-90
	M-3 Burrowing Owl Monitoring and Mitigation Plan	M-91 – M-146
N	Cultural Resources Study (Confidential)	N-1 – N-2
O	Socioeconomics	O-1 – O-4
P	Public Health and Safety	P-1 – P-50
Q	Traffic	Q-1 – Q-4
R	Correspondence	R-1 – R-46
S	Environmental Protection Measures, Design Measures, BMPs, and Conditions of Certification from CEC License Decision	S-1 – S-120
T	Public Agency Comments on the Draft EA and Responses to Comments	T-1 – T-20

APPENDIX A

RECORD OF PUBLIC CONTACT

STATE OF CALIFORNIA – THE NATURAL RESOURCES AGENCY Arnold Schwarzenegger, *Governor*

California Energy Commission
1516 Ninth Street
Sacramento, CA 95814
Website: www.energy.ca.gov
Consumer Website: www.ConsumerEnergyCenter.org
Children's Website: www.energyquest.ca.gov

APPLICATION FOR CERTIFICATION FOR THE ABENGOA MOJAVE SOLAR PROJECT

Docket No. 09-09-AFC-5

NOTICE OF INFORMATIONAL HEARING ENVIRONMENTAL SCOPING MEETING AND PUBLIC SITE VISIT

On August 10, 2009, Mojave Solar LLC, filed an Application for Certification (AFC) to construct and operate the Abengoa Mojave Solar (AMS) project, a 250 megawatt (MW) solar electric generating facility on approximately 1,765 acres located approximately nine miles northwest of the town of Hinkley in unincorporated San Bernardino County. The Energy Commission has exclusive jurisdiction to license this project and is considering the proposal under a twelve-month review process established by Public Resources Code, section 25540.6.

PLEASE TAKE NOTICE that the Energy Commission has designated a Committee of two commissioners to conduct proceedings on the AFC. The Committee has scheduled a Public Site Visit, Informational Hearing, and Environmental Scoping Meeting to discuss the proposed project as described below:

WEDNESDAY, December 9, 2009
Site Visit begins (bus leaves) at 1:00 p.m.
Public Informational Hearing & Environmental Scoping Meeting begins at 3:00 p.m.

Barstow City Hall
220 E. Mountain View Street
Barstow, California 92311
(**Map**)

Members of the public are invited to join the Committee on a tour of the proposed site. The Applicant will provide transportation to and from the site. For reservations, contact the Energy Commission Public Adviser's Office at (916) 654-4489, 800-822-6228, or e-mail: [publicadviser@energy.state.ca.us]. Please make your reservation on or before 12:00 noon, Monday, December 7, 2009, so we can assure you a space.

Background

The power plant licensing process, which incorporates requirements equivalent to the California Environmental Quality Act (CEQA), considers all relevant engineering and environmental aspects of the proposed project. It provides a public forum allowing the Applicant, Commission staff, governmental agencies, adjacent landowners, and members of the public to consider the advantages and disadvantages of the project, and to propose changes, mitigation measures, and alternatives as necessary.

On October 21, 2009, the Energy Commission began its review of the project. During the review period, it will determine whether the proposed project complies with applicable laws related to public health and safety, environmental impacts, and engineering requirements. During the preparation of its analysis, Commission staff may hold one or more public workshops. After Staff's analysis is completed, the Committee will hold evidentiary hearing(s) and prepare a Presiding Member's Proposed Decision (PMPD), based solely on the evidence presented during the hearing (s), recommending whether or not to approve the proposed project. The PMPD will then be considered by the full Energy Commission.

Project Description

The AMS facility is proposed for a 1,765 acre site approximately nine miles northwest of the site in the town of Hinkley, San Bernardino County, and six miles north of the intersection of Harper Lake Road and State Highway 58. The existing Solar Electric Generating Stations (SEGS) VIII and IX facilities, owned by NextEra™ Energy Resources, are located immediately northwest of the project site.

The project site is comprised of private property that was known as the Lockhart Ranch complex and used for agricultural and cattle production for over sixty years. The property is designated and also zoned Rural Living (RL) by the San Bernardino County General Plan.

The proposed project is a solar electric generating facility using solar parabolic trough technology to activate a heat transfer fluid. That fluid is then used to generate steam to drive steam turbine generators, generating electrical power. The project would have a combined nominal electrical output of 250-MW from twin, independently-operable solar fields, each feeding a 125-MW power island. The twin solar fields would be 884 acres and 800 acres, respectively, and joined at a transmission line interconnection substation, located on-site. An additional 81 acres, shared between the solar sites, would be utilized for drainage facilities for receiving and discharging of on-site and off-site drainage.

Natural gas for ancillary project purposes, such as auxiliary boilers, space heating, and similar uses, would be supplied by an existing natural gas pipeline that runs to the project boundary. Each power island would also have a diesel engine-driven firewater pump for fire protection and a diesel engine-driven backup generator for power plant essentials. The AMS project would connect to Southern California Edison Company's Kramer-Cool Water 230-kV transmission line, which is located adjacent to the southern border of the project site.

The project proposes to use wet cooling towers for power plant cooling and owns adjudicated water rights to the Harper Valley Groundwater Basin for this purpose. The groundwater supply is expected to be brackish and not suitable for municipal supply or other potable uses without treatment. The project proposes to use 2,163 acre-feet of water per year.

The project will include four 5-acre lined evaporation ponds for industrial wastewater. A sanitary septic system and on-site leach field will be used to dispose of sanitary wastewater.

If approved, construction of the generating facility, from site preparation and grading to commercial operation, is expected to take place from the fourth quarter of 2010 to the fourth quarter of 2012 (24 months total).

The engineering and environmental details of the proposed project are contained in the AFC. The AFC is available on the Energy Commission Web Page for this project, libraries in Eureka, San Francisco, Fresno, Los Angeles, San Diego, the Energy Commission's Library, California State Library, and at the following local area libraries: Adelanto Library; Apple Valley Library; Barstow Library; and Mojave Library.

Purpose of the Scoping Meeting and Informational Hearing

This Scoping Meeting and Informational Hearing provides an opportunity for members of the community in the project vicinity to obtain information and offer comments and concerns about the proposed project as well as identify potential environmental impacts for consideration during the Energy Commission's review of the proposal. The Applicant will explain plans for developing the project and the related facilities and Energy Commission staff will explain the administrative licensing process and Staff's role in reviewing the AFC.

Proposed Schedule and Issue Identification Report

To assist the parties and public in understanding the process, Staff shall file a proposed schedule for project review. Staff shall also file an Issue Identification Report (IIR) summarizing the major environmental and other issues it has identified regarding the project and what additional information is necessary to resolve issues of concern. The proposed schedule and Staff's report shall be filed no later than **noon on December 2, 2009**. The Applicant shall file its response, if any, no later than **noon on December 7, 2009**.

Public Adviser and Public Participation

The Energy Commission's Public Adviser's Office is available to assist the public in participating in the AFC review process. For information on how to participate, please contact the Public Adviser's Office at (916) 654-4489 or, 800-822-6228 or e-mail: [publicadviser@energy.state.ca.us].

If you have a disability and need assistance to participate in this event, contact Lourdes Quiroz at 916-654-5146 or e-mail: [lquiroz@energy.state.ca.us].

Contact Information

Questions of a legal or procedural nature should be directed to Paul Kramer, the Hearing Officer, at (916) 654-5103 or e-mail: [pkramer@energy.state.ca.us].

Technical questions concerning the Project should be addressed to Craig Hoffman, the Staff Project Manager, at (916) 654-4781, or by e-mail: [choffman@energy.state.ca.us].

Media inquiries should be directed to the Energy Commission's Office of Media and Communications at (916) 654-4989 or e-mail: [mediaoffice@energy.state.ca.us].

Information concerning the status of the project, as well as notices and other relevant documents, including the AFC, may be viewed on the Energy Commission's Internet web page at: www.energy.ca.gov/sitingcases/abengoa/. You may also subscribe to receive e-mail notification of all notices at www.energy.ca.gov/listservers.

Dated November 12, 2009, at Sacramento, California.

JULIA LEVIN
Commissioner and Presiding Member
Abengoa Mojave AFC Committee

JAMES D. BOYD
Vice Chair and Associate Member
Abengoa Mojave AFC Committee

Mailed to lists: POS, 7361, 7362, 7363, 7364

Accessibility

Copyright © 1994-2008 California Energy Commission, All Rights Reserved
State of California, Arnold Schwarzenegger, Governor

Last Modified: 11/17/09

CALIFORNIA ENERGY COMMISSION
1516 NINTH STREET
SACRAMENTO, CA 95814-5512
www.energy.ca.gov

March 16, 2010

DOCKET
09-AFC-5
DATE MAR 16 2010
REC'D MAR 17 2010

NOTICE OF AVAILABILITY
STAFF ASSESSMENT FOR THE PROPOSED
ABENGOA MOJAVE SOLAR PROJECT
(09-AFC-5)

NOTICE OF PUBLIC WORKSHOPS

Tuesday, April 6, 2010
Starting at 10:15 am

California Energy Commission
Fourth Floor North Conference Room A
1516 9th Street
Sacramento, CA 95814-5512
(Wheelchair Accessible)
(Map Attached)

To participate in the meeting by telephone,
please call: 800-369-2193 (toll-free in the U.S. and Canada)
Enter passcode: 54011

Wednesday, April 7, 2010
Starting at 1:00 pm

Barstow City Hall
220 E. Mountain View Street
Barstow, California 92311

(Wheelchair Accessible)
(Map Attached)

To participate in the meeting by telephone,
please call: 800-369-2193 (toll-free in the U.S. and Canada)
Enter passcode: 54011

TO: MEMBERS OF THE PUBLIC

This notice is to inform you of the availability of the Staff Assessment (SA) for the Abengoa Mojave Solar project Application for Certification (09-AFC-5). The SA was published on **March**

PROOF OF SERVICE (REVISED 03/04/10) FILED WITH
COPIES MAILED FROM SACRAMENTO ON 03/17/10
AA

16, 2010. The SA contains the California Energy Commission staff's engineering and environmental evaluation of the proposed Abengoa Mojave Solar project.

This notice is also to inform you that the Energy Commission staff will hold a workshop to discuss the SA and to further encourage public participation, regarding the proposed Abengoa Mojave Solar project and the Energy Commission's permitting process. The workshop will provide an opportunity for agencies, the public and other interested parties to present questions and comments on the SA. All interested agencies and members of the public are invited to participate. **The workshops will be held on Tuesday, April 6, 2010 starting at 10:15 am in Sacramento at the California Energy Commission's Fourth Floor North Conference Room A, 1516 9th Street and Wednesday, April 7, 2010 at 1:00 pm in Barstow at the Barstow City Hall, 220 E. Mountain View Street.**

Based on the workshop dialogue, written comments received regarding the SA, and additional information that will be gathered, the Energy Commission staff will revise the SA where appropriate and issue a Supplemental Staff Assessment (SSA).

The California Energy Commission encourages public participation in the review of the Abengoa Mojave Solar Application for Certification (09-AFC-5). **The public comment period for this SA is from Tuesday March 16, 2010 to Thursday, April 15, 2010**. Written comments on the SA should be provided to Craig Hoffman, Siting Project Manager, no later than 5:00 p.m., Thursday, April 15, 2010 at the address on this letterhead or by email to choffman@energy.state.ca.us. Technical or project schedule questions should be directed to Craig Hoffman at (916) 654-4781 or by email.

Following a 30-day public comment period on the Staff Assessment, a Supplemental Staff Assessment will be prepared and published based on Staff Assessment workshops and written comments, staff may refine its analysis, correct errors, and finalize conditions of certification to reflect areas where agreements have been reached with the parties and will then publish a Supplemental Staff Assessment (SSA). The SSA will be a limited document representing revisions and additions rather than a document including each technical section.

The Staff Assessment and Supplemental Staff Assessment will serve as staff's formal written testimony in evidentiary hearings to be held by the Energy Commission Committee assigned to hear this case. The Committee will hold evidentiary hearings and will consider the testimonies presented by staff, applicant, interveners, government agencies, and the public prior to preparing the Presiding Member's Proposed Decision. In the last step, the full Energy Commission will issue the final decision.

Summary of the Proposed Abengoa Mojave Solar

The proposed AMS project is a solar electric generating facility to be located on approximately 1,765 acres. The proposed project site is located approximately nine miles northwest of the Town of Hinkley in unincorporated San Bernardino County, approximately halfway between the City of Barstow and Kramer Junction (Highway 395 / Highway 58 junction). Project access is provided by Harper Lake Road, which is located approximately

twenty miles west of Barstow along the Highway 58 corridor. The project site is approximately six miles north of where Harper Lake Road intersects with Highway 58. The existing Solar Electric Generating Stations VIII and IX facilities, owned by NextEra™ Energy Resources, are located immediately northwest of the project site.

The project site is comprised of private property that was historically used as the Lockhart Ranch complex. The property has served as an agricultural and cattle center for over sixty years and, in that capacity, has utilized water from ground wells; farming activities have included flood irrigation and ultimately the pivot system of irrigation of quarter section areas. Currently there are no ranching or residential activities on the property, and there is only one active pivot irrigation field in production on the site.

The project would utilize solar parabolic trough technology to activate a heat transfer fluid. The proposed collector fields of parabolic trough solar collectors are modular in nature and comprise many parallel rows of solar collectors, aligned on a north-south axis. Each solar collector has a linear, parabolic-shaped reflector that focuses the sun's radiation on a linear receiver known as a heat collection element located at the focus of the parabola.

As heat transfer fluid is circulated through the solar field, light from the sun reflects off the solar collector's parabolic troughs and is concentrated on the heat collection elements located at the focal point of the parabola. This heat transfer fluid provides a high-temperature energy source which is used to generate steam in solar steam generators. As this steam expands through the steam turbine generators, electrical power is generated.

The project will have a combined nominal electrical output of 250 megawatts (MW) from twin, independently-operable solar fields, each feeding a 125-MW power island. The plant sites, identified as Alpha (the northwest portion of the Project area) and Beta (the southeast portion of the project area), will be 884 acres and 800 acres respectively and joined at an on-site transmission line interconnection substation to form one full-output transmission interconnection. This proposed substation, located at the southwest corner of the Beta solar field, is referred to as the "Hinkley" substation. An additional 81 acres shared between the plant sites will be utilized for receiving and discharging offsite stormwater drainage.

The applicant has a power purchase agreement with Pacific Gas and Electric.

Energy Commission Licensing Authority

The Energy Commission is responsible for reviewing and ultimately approving or denying all applications for construction and operation of thermal electric power plants, 50 MW and greater, proposed for construction in California. The Energy Commission's facility certification process carefully examines public health and safety, environmental impacts and engineering aspects of proposed power plants, and all related facilities such as electric transmission lines and natural gas and water pipelines. The Energy Commission is the lead agency under the California Environmental Quality Act (CEQA), and produces several environmental and decision documents rather than an Environmental Impact Report.

Summary of the California Energy Commission Staff's Conclusions

Based upon the information provided to date and the analysis completed to date for each technical section, staff has concluded that with implementation of staff's recommended mitigation measures described in the conditions of certification, all potential environmental impacts will be mitigated to a less than significant level. The project analysis complies with the requirements of the California Environmental Quality Act (CEQA). For a detailed review of potentially significant impacts and the related mitigation measures, please refer to each chapter of the SA.

Within the technical areas of **Air Quality, Biological Resources, Soil and Water Resources, Transmission System Engineering** and **Waste Management** additional analysis will be needed in regard to specific issues that are described in each section's summary of conclusions.

Staff also concludes that with implementation of staff's recommended mitigation measures described in the conditions of certification, the project would comply with all applicable laws, ordinances, regulations, and standards (LORS), with the exception of the **Soil and Water Resources** section.

The state has expressed a strong interest in developing its solar energy resources. However, the construction and operation of solar energy facilities requires the use of water, which state policy also protects. The Energy Commission must balance the state's interest in promoting solar energy development with its interest in conserving and protecting the state's water resources. Several projects currently proposed in the Mojave and Colorado deserts would use water for power plant cooling, which staff believes is contrary to the state's long term interest in maximizing solar power generation and minimizing adverse environmental impacts. This will be an especially critical issue in the renewable development areas that will be identified in the joint state/federal Renewable Energy Action Team's Desert Renewable Energy Conservation Plan (DRECP). Later this year, staff plans to file a request for an Energy Commission Order Instituting an Informational Proceeding to address the overall issue of water use by power plants. For a more detailed discussion of water policy and related LORS, see staff's technical analyses in the **Soil and Water Resources** section of the SA.

Public Resources, Contact Information and Additional Sources for Information

If you desire information on how to participate in the Energy Commission's review of the proposed project, please contact Jennifer Jennings, the Energy Commission's Public Adviser, at (916) 654-4489 or toll free in California at (800) 822-6228, or by email at: publicadviser@energy.state.ca.us.

To request special accommodations for those persons with disabilities, please contact Lourdes Quiroz, the Energy Commission's Equal Employment Opportunity Officer at lquiroz@energy.state.ca.us or by telephone (916) 654-5146. For those persons with limited English knowledge, request interpreter services by contacting the Project Manager, Craig Hoffman, at (916) 654-4781.

The status of the project, an electronic copy of the SA, copies of notices, and other relevant documents are also available on the Energy Commission's web site at: http://www.energy.ca.gov/sitingcases/abengoa.

News media inquiries should be directed to Assistant Director, Susanne Garfield, at (916) 654-4989, or by email at: mediaoffice@energy.state.ca.us.

The SA will be available for review at the following San Bernardino County local libraries:

Barstow Branch Library
304 E. Buena Vista St.
Barstow, CA 92311

Victorville City Library
15011 Circle Dr.
Victorville, CA 92395

Apple Valley Newton T. Bass
Branch Library
14901 Dale Evans Parkway
Apple Valley, CA 92307

Victor Valley College
18422 Bear Valley
Victorville CA 92392-5849

Adelanto Branch Library
11497 Bartlett Ave.
Adelanto, CA 92301

Kern County Library
Mojave Branch
16916 ½ Highway 14, Space D2
Mojave, CA 93501

Barstow Community College Library
2700 Barstow Road
Barstow, California 92311

Copies are also available at the Energy Commission's Library in Sacramento, the California State Library in Sacramento, and at public libraries in Eureka, San Francisco, Los Angeles, Fresno, and San Diego. In addition, this information has been shared with those public agencies that would normally have jurisdiction but for the Energy Commission's exclusive authority to certify sites and related facilities.

If you would like a paper copy or CD of the SA, please fill out the enclosed form and return it to California Energy Commission, Attention: April Albright, Siting Project Assistant, at (916) 653-1640, or by e-mail at aalbright@energy.state.ca.us.

Sincerely,

Date: 3/16/10

Original signed by E. Allen for:
TERRENCE O'BRIEN, Deputy Director
Siting, Transmission and Environmental
Protection Division

Enclosure
Mailed to lists:
7285 - General
7286 - Property Owners

Please send me a paper copy / CD (circle one) of the California Energy Commission staff's Staff Assessment for the Abengoa Mojave Solar Application for Certification (*09*-AFC-*5*).

Name:

Address:

City/State/Zip:

FOLD HERE

California Energy Commission
Attention: April Albright
1516 Ninth Street, MS-15
Sacramento, CA 95814-5512

A-13

FOLD HERE

Staple or Tape closed.

SA WORKSHOP FOR ABENGOA MOJAVE SOLAR (*09*-AFC-*5*)

NOTICE OF PUBLIC WORKSHOP
Tuesday, April 6, 2010
Starting at 10:15 am

California Energy Commission
Fourth Floor North Conference Room A
1516 9th Street
Sacramento, CA 95814-5512

(Wheelchair Accessible)

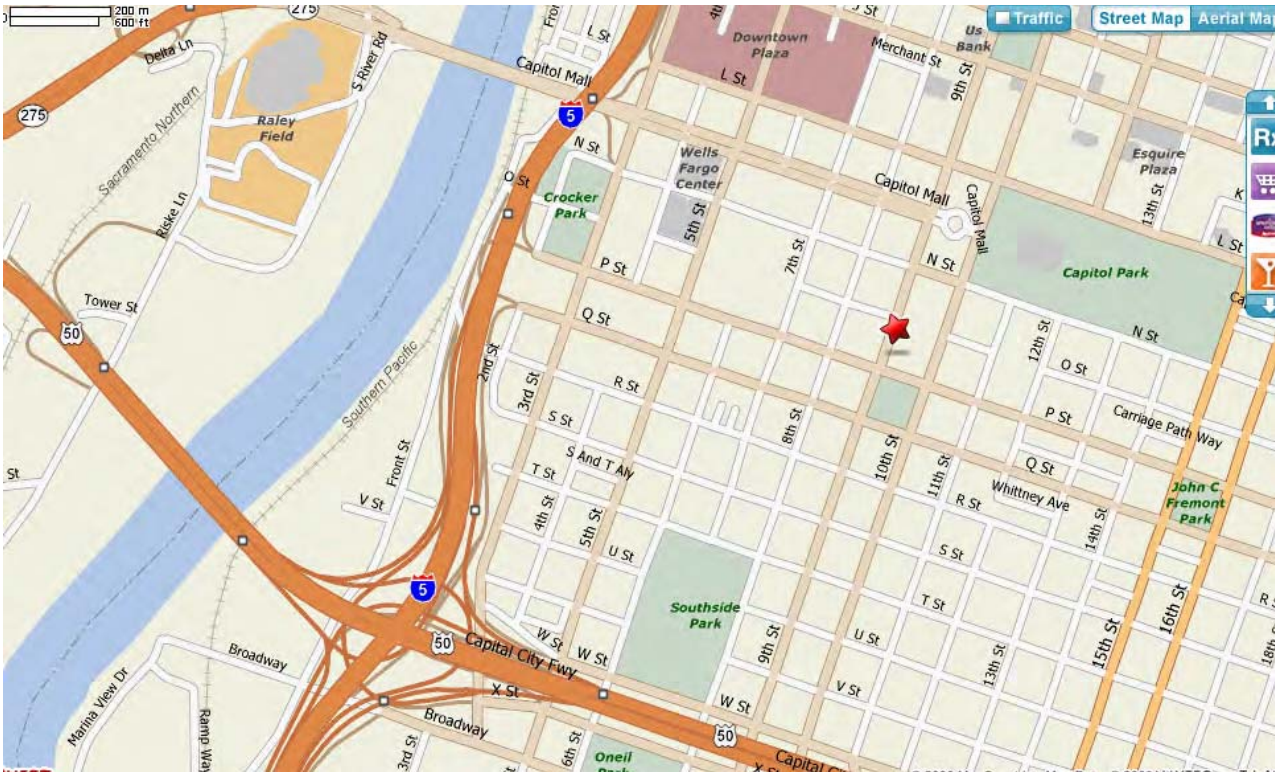

SA WORKSHOP FOR ABENGOA MOJAVE SOLAR (*09*-AFC-*5*)

NOTICE OF PUBLIC WORKSHOP
Wednesday, April 7, 2010
Starting at 1:00 pm

Barstow City Hall
220 E. Mountain View Street
Barstow, California 92311

(Wheelchair Accessible)

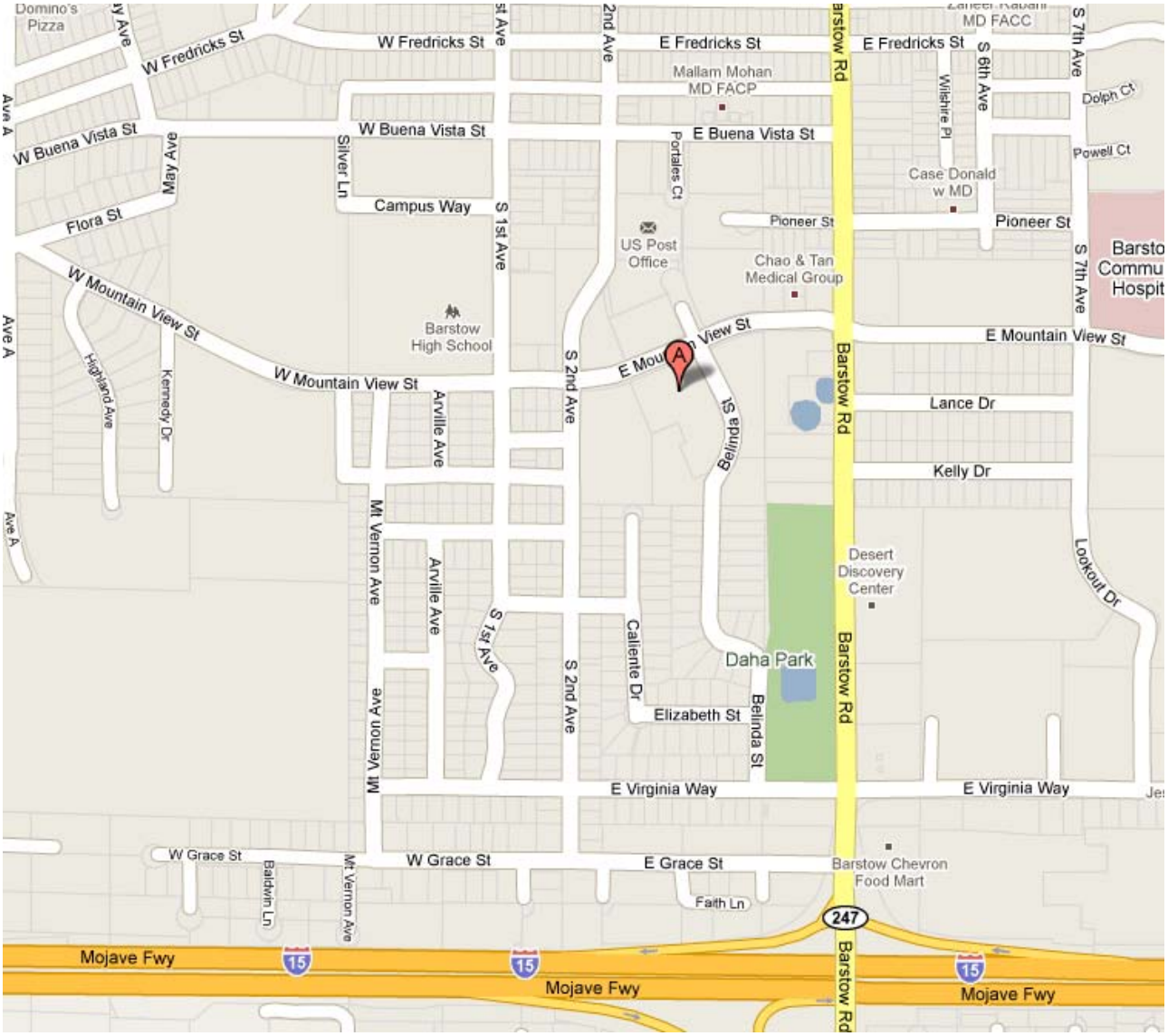

BEFORE THE ENERGY RESOURCES CONSERVATION AND DEVELOPMENT COMMISSION OF THE STATE OF CALIFORNIA
1516 NINTH STREET, SACRAMENTO, CA 95814
1-800-822-6228 – WWW.ENERGY.CA.GOV

APPLICATION FOR CERTIFICATION
FOR THE *ABENGOA MOJAVE SOLAR POWER PLANT*

Docket No. 09-AFC-5
PROOF OF SERVICE
(Revised 3/4/2010)

APPLICANT
Emiliano Garcia Sanz
General Manager
Abengoa Solar Inc.
11500 West 13th Avenue
Lakewood, CO 80215
emiliano.garcia@solar.abengoa.com

Scott D. Frier
Chief Operating Officer
Abengoa Solar Inc.
13911 Park Ave., Ste. 206
Victorville, CA 92392
scott.Frier@solar.abengoa.com

Tandy McMannes
2030 Addison Street, Suite 420
Berkeley, CA 94704
tandy.mcmannes@solar.abengoa.com

APPLICANT'S CONSULTANTS
Frederick H. Redell, PE
Engineering Manager
Abengoa Solar, Inc.
11500 West 13th Avenue
Lakewood, CO 80215
frederick.redell@solar.abengoa.com

COUNSEL FOR APPLICANT
Christopher T. Ellison
Ellison, Schneider & Harris
2600 Capitol Ave.
Sacramento, CA 95816
cte@eslawfirm.com

INTERESTED AGENCIES
California ISO
E-mail Preferred
e-recipient@caiso.com

INTERVENORS
California Unions for Reliable Energy ("CURE")
Tanya A. Gulesserian
Marc D. Joseph
Elizabeth Klebaner
Adams Broadwell Joseph & Cardozo
601 Gateway Boulevard, Suite 1000
South San Francisco, CA 94080
E-mail Preferred
tgulesserian@adamsbroadwell.com
eklebaner@adamsbroadwell.com

Luz Solar Partners Ltd., VIII
Luz Solar Partners Ltd., IX
Jennifer Schwartz
700 Universe Blvd
Juno Beach, FL 33408
jennifer.schwartz@nexteraenergy.com

ENERGY COMMISSION
*ANTHONY EGGERT
Commissioner and Presiding Member
aeggert@energy.state.ca.us

JAMES D.BOYD
Vice Chairman and Associate Member
jboyd@energy.state.ca.us

Paul Kramer
Hearing Officer
pkramer@energy.state.ca.us

Craig Hoffman
Project Manager
choffman@energy.state.ca.us

Christine Hammond
Staff Counsel
chammond@energy.state.ca.us

Jennifer Jennings
Public Adviser's Office
publicadviser@energy.state.ca.us

DECLARATION OF SERVICE

I, April Albright, declare that on March 17, 2010, I served and filed copies of the attached Library Letter for; Request for Agency Comments on; and Notice of Availability of the Staff Assessment. The original document, filed with the Docket Unit, is accompanied by a copy of the most recent Proof of Service list, located on the web page for this project at: **[http://www.energy.ca.gov/sitingcases/abengoa/index.html].**

The document has been sent to both the other parties in this proceeding (as shown on the Proof of Service list) and to the Commission's Docket Unit, in the following manner:

(C*heck all that Apply*)

For service to all other parties:

__✓__ sent electronically to all email addresses on the Proof of Service list;

__✓__ by personally delivery;

__✓__ by delivery on this date, for mailing with the United States Postal Service with first-class postage thereon fully prepaid, to the name and address of the person served, for mailing that same day in the ordinary course of business; that the envelope was sealed and placed for collection and mailing on that date to those addresses **NOT** marked "email preferred."

AND

For filing with the Energy Commission:

__✓__ **sending an original paper copy and one electronic copy, mailed and emailed respectively, to the address below (preferred method);**

OR

_____ depositing in the mail an original and 12 paper copies, as follows:

CALIFORNIA ENERGY COMMISSION
Attn: Docket No. 09-AFC-5
1516 Ninth Street, MS-4
Sacramento, CA 95814-5512
docket@energy.state.ca.us

I declare under penalty of perjury that the foregoing is true and correct, that I am employed in the county where this mailing occurred, and that I am over the age of 18 years and not a party to the proceeding.

Original signed by: _____
April Albright

BEFORE THE ENERGY RESOURCES CONSERVATION AND DEVELOPMENT
COMMISSION OF THE STATE OF CALIFORNIA
1516 NINTH STREET, SACRAMENTO, CA 95814
1-800-822-6228 – WWW.ENERGY.CA.GOV

APPLICATION FOR CERTIFICATION FOR THE
ABENGOA MOJAVE SOLAR PROJECT

DOCKET NO. 09-AFC-5

NOTICE OF AVAILABILITY OF THE PRESIDING MEMBER'S PROPOSED DECISION
AND
NOTICE OF COMMITTEE CONFERENCE
AND
NOTICE OF FULL COMMISSION HEARING

I. NOTICE OF AVAILABILITY

On August 6, 2010, the Committee issued the Presiding Member's Proposed Decision (PMPD) for the ***ABENGOA MOJAVE SOLAR PROJECT***. The 30-day public comment period on the PMPD ends on September 6, 2010. Copies of the PMPD have been sent to the Proof of Service list. The PMPD may also be viewed on the Commission's internet website at: **[www.energy.ca.gov/sitingcases/abengoa].**

For a printed copy, call the Energy Commission's Publications Unit at 916-654-5200, and ask for Publication No. **CEC 800-2010-008-PMPD**.

The parties in the case shall file and serve their written comments on the PMPD to the Proof of Service list and via e-mail **no later than 3 p.m. on September 6, 2010**.

II. NOTICE OF COMMITTEE CONFERENCE

PLEASE TAKE NOTICE that the Committee will hold a Committee Conference on the PMPD as follows:

MONDAY, AUGUST 23, 2010
Beginning at 1:00 p.m.

California Energy Commission
Hearing Room B
1516 Ninth Street
Sacramento, CA 95814

TELECONFERENCE OPTION: *You may participate in the Committee Conference by telephone and/or by computer via our* ***"WebEx"*** *web conferencing system. For details on how to participate, please see the "Participation through WebEx" directions attached to this Notice.*

Comments on the PMPD

The purpose of the Committee Conference is to consider oral and written comments on the PMPD from the parties, governmental agencies, and members of the public. The parties in the case shall file and serve their written comments on the PMPD to the Proof of Service list and via e-mail **no later than 3 p.m. on September 6, 2010**.

Members of the public and governmental agency representatives are encouraged to submit their written comments by the close of the 30-day review period. The Energy Commission encourages comments by e-mail. Please include your name or organization's name in the name of the file. Those submitting attached comments by electronic mail should provide them in either Microsoft Word format or as a Portable Document (.pdf) to [**docket@energy.state.ca.us**]. **One paper copy** must also be sent to the Energy Commission's Docket Unit, 1516 Ninth Street, MS-4, Sacramento, CA 95814. Identify all comments with "**Docket No. 09-AFC-5."**

III. NOTICE OF COMMISSION HEARING

PLEASE TAKE NOTICE the full Commission will consider the PMPD, released on August 6, 2010, and the Errata, if applicable, for possible adoption as follows:

***WEDNESDAY, September 8*, 2010**
Beginning at 10 a.m.

California Energy Commission
Hearing Room A
1516 Ninth Street
Sacramento, California 95814

The purpose of this hearing is to consider whether the Energy Commission should adopt, modify, or reject the PMPD. Parties and members of the public may participate and offer oral and written comments on the PMPD. Identify all comments with "**Docket No. 09-AFC-5**."

Participating by Telephone at a Business Meeting

If you want to participate by telephone, call toll free 1-888-823-5065 on Business Meeting days after 10:01 a.m. (PDT). When asked, please answer "Business Meeting and Mr. Jerome Lee" and the operator will connect you into the meeting. Should you want to speak on a specific item, please inform the operator and provide the item number. The Business Meeting is also broadcast via **WebEx**, the Energy Commission's on-line meeting service. To listen to the meeting and view any presentations, please click the following link or paste it into your browser:

https://energy.webex.com/energy/onstage/g.php?t=a&d=928463379

You may also go to https://energy.webex.com/ec and enter Meeting Number **928 463 379**. The meeting password is “mtg@10am.”

Public Participation

The Energy Commission’s Public Adviser’s Office is available to assist the public in participating in the application review process. For information on how to participate, please contact the Public Adviser’s Office at (916) 654-4489 or (800) 822-6228 or by e-mail: **[publicadviser@energy.state.ca.us]**.

If you have a disability and need assistance to participate in this event, contact Lourdes Quiroz at (916) 654-5146 or e-mail: [**lquiroz@energy.state.ca.us**]. Media inquiries should be directed to the Office of Media and Public Communications at (916) 654-4989 or e-mail: [**mediaoffice@energy.state.ca.us**].

Questions of a legal or procedural nature should be directed to Kourtney Vaccaro, the Hearing Officer, at (916) 654-4328 or e-mail: **[kvaccaro@energy.state.ca.us]**.

Technical questions concerning the Project should be addressed to Craig Hoffman, the Staff Project Manager, at (916) 654-4781, or by e-mail: **[choffman@energy.state.ca.us]**.

Media inquiries should be directed to the Energy Commission’s Office of Media and Communications at (916) 654-4989 or e-mail: **[mediaoffice@energy.state.ca.us]**.

Information concerning the status of the project, as well as notices and other relevant documents, including the AFC, may be viewed on the Energy Commission's Internet web page at: **[www.energy.ca.gov/sitingcases/abengoa]**.

Dated: August 6, 2010, at Sacramento, California.

ANTHONY EGGERT
Commissioner and Presiding Member
Abengoa Mojave AFC Committee

JAMES D. BOYD
Vice Chair and Associate Member
Abengoa Mojave AFC Committee

PARTICIPATION IN THE COMMITTEE CONFERENCE THROUGH WEBEX
THE ENERGY COMMISSION'S ON-LINE MEETING SERVICE

1. COMPUTER LOG-ON WITH A DIRECT PHONE NUMBER:

- Please go to https://energy.webex.com and enter the ***meeting number*** *unique* to the specific hearing date:

- 8/23/10 meeting number**:** **925 188 458**
  - When prompted, enter your information and the ***meeting password***: **abengoa#2**

After you login, a prompt will appear on-screen for you to provide **your** phone number. In the **Number box**, type your area code and phone number and click OK. **You will receive a call back on your phone for the audio of the meeting**. International callers can use the "Country/Region" button to help make their connection.

2. COMPUTER LOG-ON FOR CALLERS WITH AN EXTENSION PHONE NUMBER, ETC:

- Please go to https://energy.webex.com and enter the ***unique meeting number***:
- 8/23/10 - meeting number: 925 188 458
- When prompted, enter your information and the ***meeting password***: **abengoa#2**
- *After you login, a prompt will ask for your phone number. Click "**CANCEL**."*
- ***Instead*** *call 1-866-469-3239 (toll-free in the U.S. and Canada). When prompted, enter the meeting number above and your unique Attendee ID number which is listed in the top left area of your screen after you login.*

****

3. TELEPHONE ONLY (NO COMPUTER ACCESS):

- *Call **1-866-469-3239** (toll-free in the U.S. and Canada) and when prompted enter the* **meeting number***:*
- 8/23/10 - meeting number: **925 188 458**

If you have difficulty joining the meeting, please call the WebEx Technical Support number at 1-866-229-3239. To see if your computer is compatible, visit [http://support.webex.com/support/system-requirements.html].

Please be aware that the meeting's WebEx audio and on-screen activity may be recorded.

Mailed to lists: POS, 7361, 7362, 7363, 7364

Meeting Transcripts

Full transcripts can be found at:

http://www.energy.ca.gov/sitingcases/abengoa/documents/

INFORMATIONAL HEARING, SITE VISIT and
ENVIRONMENTAL SCOPING MEETING

BEFORE THE

CALIFORNIA ENERGY RESOURCES CONSERVATION

AND DEVELOPMENT COMMISSION

In the Matter of:	)	
	)	
Application for Certification for	)	Docket No.
the Abengoa Mojave Solar Project	)	09-AFC-5
	)	
_____	)	

BARSTOW CITY HALL

220 E. MOUNTAIN VIEW STREET

BARSTOW, CALIFORNIA 92311

WEDNESDAY, DECEMBER 9, 2009

3:26 p.m.

Reported: Martha Nelson
Transcribed: Margo D. Hewitt, CET**00480
Contract No. 170-08-001

COMMITTEE MEMBERS PRESENT

Julia Levin, Presiding Member

James Boyd, Associate Member

HEARING OFFICER AND ADVISORS

Paul Kramer, Hearing Officer

Sarah Michael, Advisor

Susannah Churchill, Advisor

STAFF AND CONSULTANTS PRESENT

Christine Hammond, Staff Attorney

Craig Hoffman, Project Manager

PUBLIC ADVISER

Loreen McMahon

James Davis

APPLICANT

Christopher T. Ellison, Attorney
Ellison, Schneider and Harris, LLP

Frederick Redell, Project Manager

Scott Frier, Chief Operating Officer
Abengoa Solar, Inc.

INTERVENOR

Elizabeth Klebaner, Attorney
Adams, Broadwell, Joseph and Cardozo
representing California Unions for Reliable Energy

ALSO PRESENT

Jeanette Hayhurst
City of Barstow

Scott Lisk

I N D E X

	Page
Proceedings	1
Opening Remarks	1
Introductions	1
Background and Overview	6
Presentations	7
Hearing Officer	7
Public Adviser	15
Applicant	26/38
CEC Staff	55
Issues Identification Report	62
Proposed Schedule	63
California Unions for Reliable Energy	67
Schedule Discussion	68
Public Comment	80
Closing Remarks	99
Associate Member Boyd	99
Presiding Member Levin	99
Adjournment	99
Reporter/Transcriber Certificates	100

PREHEARING CONFERENCE

BEFORE THE

CALIFORNIA ENERGY RESOURCES CONSERVATION

AND DEVELOPMENT COMMISSION

In the Matter of:	)	
	)	Docket No. 09-AFC-5
Application for Certification For The Abengoa Mojave Solar Project	)	
_____	)	

CALIFORNIA ENERGY COMMISSION

HEARING ROOM B

1516 NINTH STREET

SACRAMENTO, CALIFORNIA

MONDAY, JUNE 21, 2010

1:15 P.M.

JAMES F. PETERS CSR, RPR
CERTIFIED SHORTHAND REPORTER
LICENSE NUMBER 10063

Contract No. 170-09-002

APPEARANCES

COMMITTEE MEMBERS

Anthony Eggert, Presiding Member

HEARING OFFICERS, ADVISERS

Kourtney Vaccaro, Hearing Officer

Lorraine White, adviser to Commissioner Anthony Eggert

Sarah Michael, adviser to Commissioner James D. Boyd

STAFF

Christine J. Hammond, Senior Staff Counsel

Craig Hoffman, Project Manager

APPLICANT

Gregory L. Wheatland, Esq.
Ellison, Schneider & Harris, LLP

Shane E. Conway, Esq.
Ellison, Schneider & Harris, LLP

Tandy McMannes
Abengoa Solar

Frederick Redell
Abengoa Solar

Matt Stucky
Abengoa Solar

INTERVENOR: CURE

Elizabeth Klebaner, Esq.
Adams Broadwell Joseph & Cardozo

INTERVENOR: COUNTY OF SAN BERNARDINO

Bart Brizee, Deputy County Counsel

APPEARANCES CONTINUED

ALSO PRESENT

James Brathovde
Lahontan Regional Water Quality Control Board

INDEX

	PAGE
Opening remarks by Presiding Member Eggert	1
Introductions	1
Opening Remarks by Hearing Officer Vaccaro	4
Discussion of Topics not Ready for Hearing	7
Discussion of Topics Ready and Not Disputed	15
Project Description	15
Biological Resources	22
Hazardous Materials Management	24
Land Use	26
Socioeconomic Resources	26
Soil & Water	29
Traffic & Transportation	40
Worker Safety & Fire Protection	41
Discussion of Time Table	57
Closing Remarks by Presiding Member Eggert	68
Adjournment	70
Reporter's Certificate	71

PRESIDING MEMBER'S PROPOSED DECISION

BEFORE THE

CALIFORNIA ENERGY RESOURCES CONSERVATION

AND DEVELOPMENT COMMISSION

APPLICATION FOR CERTIFICATION	)	
Abengoa Mojave Solar Project	)	Docket No. 09-AFC-5

CALIFORNIA ENERGY COMMISSION

1516 9TH STREET

HEARING ROOM B

SACRAMENTO, CALIFORNIA

MONDAY, AUGUST 23, 2010

1:05 P.M.

TIFFANY C. KRAFT, CSR, RPR
CERTIFIED SHORTHAND REPORTER
LICENSE NUMBER 12277

EHLERT BUSINESS GROUP (916) 851-5976

APPEARANCES

COMMITTEE MEMBERS PRESENT

Anthony Eggert, Commissioner, Presiding Member

James D. Boyd, Vice Chair, Associate Member

HEARING OFFICER

Kourtney Vaccaro

ADVISORS

Sarah Michael

Lorraine White

STAFF AND CONSULTANTS PRESENT

Christine Hammond, Counsel

Craig Hoffman, Project Manager

Jennifer Jennings, Public Advisor

Alvin Greenburg, (telephonic)

APPLICANT

Ellison, Schneider & Harris, LLP
Christopher Ellison
Shane E. Conway

Abengoa Solar
Matt Stucky
Scott Frier

APPEARANCES (continued)

LOCAL GOVERNMENT

County of San Bernardino
Bart Brizzee
Peter Brierty
(via telephone)

EHLERT BUSINESS GROUP (916) 851-5976

INDEX

		Page
1.	Call to Order	1
2.	Applicant Comments	4
3.	Staff Comments	7
4.	County Comments	7
Adjournment		17
Reporter's Certificate		18

APPENDIX B

INTERCONNECTION SYSTEM IMPACT STUDY

Interconnection System Impact Study

Generation Interconnection

Harper Lake, LLC.

Harper Lake Solar Plant Project

June 27, 2008

This study has been completed in coordination with Southern California Edison per the Large Generator Interconnection Procedures

EXECUTIVE SUMMARY

Harper Lake, LLC ("HLLLC") applied to the California Independent System Operator ("CAISO") for interconnection of the proposed Harper Lake Solar Plant Project ("HLSP Project") pursuant to section 3.5 of the Large Generator Interconnection Procedures ("LGIP") issued under the CAISO Tariff. The HLSP Project, a solar thermal generating facility to be located in Hinkley, California (San Bernardino County), approximately twelve miles east of Kramer Junction and just west of Harper Lake, will have a maximum net plant output of 250 MW. The HLSP Project will consist of two solar concentrated Siemens steam turbines and associated 230/13.8 kV generator transformers. HLLLC proposes to interconnect the HLSP Project into the SCE electrical system and deliver energy and/or ancillary services to the California Independent System Operator ("CAISO") Controlled Grid utilizing the existing Kramer-Cool Water No.1 230 kV radial transmission line. To interconnect the HLSP Project into the existing Kramer-Cool Water No.1 230 kV transmission line, a new substation will be needed. This substation (referred to in this study as "Hinkley"[1]) is to be located approximately 12.5 miles east from the existing Kramer Substation and approximately 31.7 miles northwest of the existing Cool Water Substation. The substation will also be needed to accommodate queued behind generation projects and will allow SCE the ability to loop the existing Kramer-Cool Water No.1 230 kV transmission line and provide for the required generation tie-line position. The HLSP Project's requested in-service date is January 1, 2010, with a commercial operation date of August 1, 2010.

SCE has performed the Interconnection System Impact Study (ISIS) to determine the adequacy of SCE's electrical system, including that portion of SCE's electrical system that is part of the CAISO Controlled Grid, to accommodate the HLSP Project. The Study was performed for two system conditions: a 2013 heavy summer with a one-in-ten load forecast and a 2013 light spring load forecast (65% of the heavy summer load). These conditions reflect the most critical expected loading condition for the transmission system in SCE's service area. The study included all queued ahead generation projects in the study area ahead of the HLSP Project regardless of the in-service dates of such prior projects. The system load condition assumptions were based on the latest in-service date of all queued ahead projects. In addition to the 2013 year cases, SCE performed a sensitivity study to evaluate if the project could interconnect in advance of implementing any transmission facility upgrades, which have been identified to be triggered by a queued ahead generation project. Such sensitivity was conducted as a means of providing HLLLC with the information required to evaluate the risk of congestion exposure while the facility upgrades are being implemented.

Results of the ISIS will be used as the basis to determine appropriate project cost allocation for facility upgrades in the Facilities Study. ***The study accuracy and results of the assessment of system adequacy are contingent on the accuracy of the technical data provided by HLLLC.*** Any changes from the data provided could void the study results. The ISIS report provides detailed study assumptions and conditions of the system in which the ISIS was conducted.

[1] The final name of the substation is subject to change once SCE finalizes the substation name evaluation efforts.

Please be aware that a restudy may be required to reflect the system configuration if a higher queued generation or transmission project that was modeled in the system impact study withdraws or is modified in accordance with applicable tariff allowances.

CONCLUSION

To interconnect the HLSP Project in a manner that addresses the generation needs in the area, avoids short-lived "piece-meal" solutions, minimizes environmental impacts, minimizes overall cost exposure to rate-payers, minimizes service interruptions, minimizes the need for generation curtailments while upgrades are implemented, and provides the minimum set of facilities for the HLSP Project, thus minimizing upfront cost responsibility, the following upgrades are required:

1. Construction of a new breaker-and-a-half 230 kV Substation (Hinkley Substation), with a four bay position switchrack,[2] equipping only two positions with a total of five circuit breakers.

2. Installation of appropriate fully redundant and diverse telecommunication facilities to provide overall system protection.

Based on the study results, the existing SCE transmission facilities with only the above minimum set of facility upgrades required to interconnect the HLSP Project are not adequate to accommodate the HLSP Project when considering all other generation projects queued ahead.

Power Flow

Without implementing any of the transmission upgrades identified to be triggered by the queued ahead projects, the existing system does not have sufficient transmission capability to deliver the total output of all queued generation projects up to and including the HLSP Project. Severe problems were identified under both heavy summer and light spring load conditions that resulted in a base case which would not solve due to voltage levels in the Lugo Area that would be well below acceptable limits. Consequently, a number of upgrades will be necessary to reliably interconnect and deliver the HLSP Project output as discussed below.

BASE CASE CONDITIONS

To mitigate problems triggered by queued ahead projects requesting interconnection along the Lugo-Pisgah corridor or to the Pisgah 230 kV Substation and along the Lugo-Victor-Kramer-Control corridor, the following transmission upgrades previously identified to be triggered by such queued ahead projects were included in the initial studies:

- Expansion of the existing SCE Pisgah 230 kV Substation to include 500 kV facilities.

[2] Standard SCE bus structures provide for up to four bay positions, but only the required bays will be equipped as part of the HLSP Project.

- Removal of the existing Lugo-Pisgah No. 2 230 kV transmission line and replacement with a new Lugo-Pisgah 500 kV transmission line.[3]
- Looping of the existing Eldorado-Lugo 500 kV transmission into the new 500 kV Pisgah Substation.
- Looping of the existing Lugo-Pisgah No. 1 230 kV transmission line into 3 new substations (Desert View, Abelia and Galway) forming new Lugo-Desert View 230 kV, Abelia-Desert View 230 kV (normally open), Abelia-Galway 230 kV, and Pisgah-Galway 230 kV transmission lines.
- Construction of a third Lugo-Victor 230 kV transmission line.
- Installation of the 3rd Lugo 500/230 kV transformer bank.

With the addition of the HLSP Project and all previously identified transmission upgrades, new base case overload problems were identified. Specifically, the HLSP Project triggers the following impacts:

Summer Load Conditions
Kramer-Lugo No.1 and No.2 230 kV Transmission Lines (85.4% → 106.5%)

Spring Load Conditions
Kramer-Lugo No.1 and No.2 230 kV Transmission Lines (97.2% → 118.7%)

To mitigate these base case overload problems, additional transmission will be required to increase the transfer capability south of Kramer Substation. Such increase in transmission capability south of Kramer Substation can best be provided by the following:

- Construction of a new Cool Water-Desert View double-circuit 230 kV transmission line with the installation of one initial circuit.

SINGLE OUTAGE CONTINGENCY (N-1)

Without the above additional facility upgrades in place to mitigate the identified base case overload problems, the study determined that the system is also inadequate to accommodate the full output of the HLSP Project under specific single outage contingencies. Because the HLSP Project results in increasing power flows on transmission facilities that are currently monitored as part of existing Kramer SPS (loss of the Lugo-Kramer No.1 or No.2 230 kV transmission lines), the HLSP Project will need to be added to the existing Kramer SPS if the additional transmission upgrades identified to mitigate the base case overloads are not implemented. The addition of the HLSP Project to the Kramer SPS will increase the amount of generation

[3] New right-of-way would be required west of the Mojave River to support a new 500 kV transmission line. A potential line routing alternative for this upgrade involves the use of existing right-of-way between the Mojave River and the Lugo Substation by removing both the existing Lugo-Pisgah No.1 and No.2 230 kV transmission lines and the construction of a new double-circuit 500 kV transmission line. One of the new 500 kV circuits would be used to connect to Pisgah and the other 500 kV circuit would be initially operated at 230 kV and connected to Desert View.

participating in the Kramer SPS from 863 MW to 1,113 MW. The actual amount of generation armed and tripped under the outage condition will be determined by the amount of power flow on the two Kramer-Lugo 230 kV transmission lines prior to the outage.

With the base case facility upgrades in place, the study determined that an SPS will still be needed to mitigate thermal and transient stability problems under loss of the Cool Water-Desert View and Lugo-Desert View 230 kV transmission lines. Outage of these lines results in loading the existing Kramer-Lugo No.1 and No.2 230 kV transmission lines as follows:

Overloaded Facility	Rating	Heavy Summer		Light Spring	
		Pre	Post	Pre	Post
Kramer-Lugo No.1 and No.2 230 kV T/Ls Loss of Cool Water-Desert View 230 kV T/L	1240 Amps (N) 1425 Amps (E)	N/A	106.5% 92.3%	N/A	118.7% 102.9%
Kramer-Lugo No.1 and No.2 230 kV T/Ls Loss of Lugo-Desert View 230 kV T/L	1240 Amps (N) 1425 Amps (E)	N/A	124.0% 107.4%	N/A	136.4% 118.3%

Under the loss of the Cool Water-Desert View 230 kV transmission line, the SPS should trip one of the HLSP generation units. Under the loss of the Lugo-Desert View 230 kV transmission line, the SPS should trip one of the HLSP generation units, as well as the generation projects directly connected to the Desert View Substation. Transfer tripping the generation projects directly connected to the Desert View Substation would not result in increasing the outage exposure of these projects, because the Desert View Substation would be connected in a radial fashion prior to adding the Cool Water-Desert View 230 kV transmission line. Such radial method of service would result in disconnecting from the source (Lugo Substation) without a second source line.

DOUBLE OUTAGE CONTINGENCY (N-2)

Without the above additional facility upgrades in place to mitigate the identified base case overload problems, the study determined that the system is also inadequate to accommodate the full output of the HLSP Project under specific double outage contingencies. The HLSP Project will need to be added to the existing Kramer SPS (loss of the Lugo-Kramer No.1 and No.2 230 kV transmission lines) if the additional transmission upgrades identified to mitigate the base case overloads are not implemented.

With the inclusion of the additional upgrades identified for mitigating the HLSP Project triggered base case thermal overloads, the study did not identify any N-2 thermal overload or transient stability problems for the local area. However, on an overall system level, the study determined that the total amount of Lugo Area generation export (South of Lugo and the Lugo-Vincent 500 kV transmission lines) is limited to approximately 7,800 MW. With the addition of more generation resources, in the North and East of Lugo areas, the amount of excess generation requiring export will eventually exceed 7,800 MW. To increase Lugo Area export limits, additional transmission capacity will be required. However, such requirement is not triggered solely by the addition of the HLSP Project, and therefore, such facility upgrades will be

evaluated and recommended as part of a larger study effort in the area (either through the RETI study process or the annual CAISO Transmission Expansion Planning Process).

Transient Stability

The study determined that with the inclusion of the additional upgrades identified for mitigating the HLSP Project triggered base case thermal overloads, the HLSP Project would not need to participate in the existing Kramer SPS. However, the study also identified that the tripping requirements for mitigating transient stability problems under the single line outage of the Lugo-Desert View 230 kV transmission line are more stringent than the tripping requirements for mitigating thermal overloads. Therefore, under this single line outage, an SPS will be required to trip the entire HLSP Project to mitigate transient stability problems identified in the ISIS.

Post-Transient Voltage

The study determined that without the facility upgrades identified under base case conditions, the HLSP Project aggravates previously identified voltage problems, including case non-convergence, which are indicative of a potential voltage collapse. The inclusion of the facility upgrades identified for queued ahead generation projects mitigate these problems.

Short-Circuit Duty

The short-circuit duty (SCD) analysis included all queued ahead generation projects, based on their application date, but did not model the corresponding transmission upgrades. The three-phase-to-ground short-circuit duty study identified two 500 kV, seven 230 kV, and four 115 kV substation locations requiring engineering review. The single-line-to-ground short circuit duty study identified two 500 kV, five 230 kV, and one 115 kV substation where duty was increased by more than 0.1 kA, and duty was in excess of 60% of the minimum circuit breaker rating.

Based on the SCD study results and engineering review, the addition of the HLSP Project triggers the need for circuit breaker replacement at the Kramer Substation. It should be noted that a number of projects have recently withdrawn from the interconnection queue or have modified technical parameters consistent with allowances under the LGIP. In addition, the transmission upgrades identified to mitigate the HLSP Project triggered base case overloads have not been included into the short-circuit duty analysis. Consequently, a reevaluation of short-circuit duty will be required as part of the Facilities Study to capture the recent generation interconnection queue withdrawals and modifications, as well as the facility upgrades associated with the mitigation plan identified in this analysis.

Deliverability Assessment

Separate studies entitled “Deliverability Assessments” were performed by the CAISO, which determined that the HLSP Project was not deemed deliverable to the Grid for Resource Adequacy (RA) purposes. The modeling assumptions for the Deliverability Assessment are different from the ones in this System Impact Study. For the details of the methodology and assumptions for Deliverability Assessment, please refer to the Baseline Generation Deliverability

Study – 2007 Q3 Study Plan posted at http://www.caiso.com/1c44/1c44b5c31cce0.html. In particular, the 2007 Q3 Deliverability Assessment modeled the following transmission upgrades:

- Lugo 500/230 kV No.3 Transformer Bank (AA-Bank)
- Kramer-Lugo No.3 230 kV Transmission Line[4]
- Victor-Lugo No.3 230 kV Transmission Line
- Replacement of the Lugo-Pisgah No.2 230 kV with a new 500 kV Transmission Line
- Operation of the remaining Lugo-Pisgah 230 kV line as two radial lines
    - Radial into Lugo connecting the new Desert View Substation
    - Radial into Pisgah connecting the new Abelia and new Galway Substations

The study did not include the new Cool Water-Desert View 230 kV transmission line(s) recommended in this study to mitigate the identified base case thermal overloads on the two Kramer-Lugo 230 kV transmission lines.

Cost Estimates

The ***Nonbinding*** Cost Estimate for the interconnection facilities and reliability network upgrades triggered by the HLSP Project is $131.7[5] million. The ***Nonbinding*** Cost Estimate for the maximum exposure for network upgrades triggered by queued ahead projects is $257.0[6] million. These estimates have been developed without detailed cost engineering and will be refined in the Facilities Study.

Facilities Study

A Facilities Study will be required for the HLSP Project. The Facilities Study will include detailed cost estimates for SCE network upgrades and direct assignment interconnection facilities required to interconnect the HLSP Project to the grid and should provide the following:

1. Develop cost estimates and schedule for the construction of a new Hinkley Substation to loop the existing Cool Water-Kramer No.1 230 kV transmission line. The Substation should consist of initially a 230 kV four-bay position with five circuit breakers to interconnect the project. (Case A).
2. Develop cost estimates and schedule for the looping of the existing Cool Water-Kramer 230 kV transmission line into the new Hinkley Substation (Case A).

[4] SPS was not modeled due to unknown specifications. With SPS and the additional Kramer-Lugo No.3 230 kV Transmission Line, the HLSP Project would be deemed deliverable.
[5] This cost estimate can increase to $227.2 million (excluding right-of-way for Cool Water-Desert View 230 kV transmission line) depending on the final routing alternative selected for queued ahead generation triggered reliability upgrades.
[6] This cost estimate can decrease to $216.3 million (excluding right-of-way) depending on the final routing alternative selected for queued ahead generation triggered reliability upgrades.

3. Develop cost estimate and schedule for the protection and telecom requirements to support the new Hinkley Substation (Case A).
4. Develop cost estimates and schedule for the construction of a new Desert View substation to loop the existing Lugo-Pisgah No.2 230 kV transmission line. The Substation would be sized for 500/230/115 kV facilities and would be capable of ultimately accommodating four 500/230 kV transformer banks, but would initially be equipped with eight 230 kV bay positions (Second four-bay position - Case A, Initial four-bay position - Case B) and 13 circuit-breakers (Two are Case A, five are Case B, two are future, and remaining four are generation direct assignment).
5. Develop cost estimates and schedule for the removal of approximately 16 miles of existing Lugo-Pisgah No.1 230 kV transmission line between Lugo and proposed Desert View Substation (Case B).
6. Develop cost estimates and schedule for the construction of a new 16-mile double-circuit 500 kV Lugo-Desert View transmission line with one circuit energized at 500 kV and the second circuit initially energized at 230 kV (Case B).
7. Develop cost estimate and schedule for the protection and telecom requirements to support the new Desert View Substation (Case B).
8. Develop cost estimates and schedule for the installation of the third Lugo 500/230 kV transformer bank (Case B).
9. Develop cost estimates and schedule for the construction of a third Lugo-Victor 230 kV transmission line (Case B).
10. Develop cost estimates and schedule for the construction of a new 37-mile double-circuit 230 kV Cool Water-Desert View transmission line (2B-1590 ACSR) with one initial circuit (Case A).
11. Develop cost estimate and schedule for SPS required to trip HLSP under two specific single outage contingencies (Case A).
12. Review identified substation locations shown in Table 2-4 through Table 2-7 to evaluate the need for circuit breaker replacements and develop corresponding cost estimates.
13. Perform any technical assessment required to account for potential queued ahead generation project withdrawals (CAISO #109, #110, #114, #115, #116, and #120) consistent with the CAISO Petition for Waiver of Tariff Provisions to Accommodate Transition to Reformed Large Generator Interconnection Procedures, and Motion to Shorten Comment Period FERC Filing, if approved at FERC.
14. SCE and the CAISO to determine the appropriate classification of the identified Network Upgrades (i.e. Reliability Network Upgrades versus Delivery Network Upgrades).

CONTENTS

EXECUTIVE SUMMARY ii

I. INTRODUCTION 1

II. STUDY CONDITIONS AND ASSUMPTIONS 2
- A. Planning Criteria 2
- B. Generation and Load Assumptions 4
- C. HLLLC – Harper Lake Solar Project 8
- D. Transmission Upgrades Included in the HLSP Base Cases 13
- E. Existing Special Protection Systems 15
- F. Power Flow Study 16
- G. Transient Stability Study 18
- H. Post-Transient Voltage Study 20
- I. Short-Circuit Duty Study 20
- J. Deliverability Assessment 21
- K. Cost Estimates 21
- L. Timelines for Implementing Facility Upgrades 22

III. GENERATOR ELECTRIC GRID FAULT RIDE-THROUGH CAPABILITY CRITERIA AND POWER FACTOR CRITERIA 22

IV. STUDY RESULTS 23
- A. Power Flow Analysis 23
- B. Transient Stability Analysis 38
- C. Post-Transient Stability Analysis 39
- D. Short Circuit Duty Study 39
- E. Deliverability Assessment 42

V. COST ESTIMATES 43

VI. ESTIMATED PROJECT TIMELINES 45

VII. CONCLUSIONS 45

APPENDIX A – HEAVY SUMMER TRANSIENT STABILITY PLOTS
APPENDIX B – LIGHT SPRING TRANSIENT STABILITY PLOTS

HARPER LAKE, LLC.
HARPER LAKE SOLAR PLANT PROJECT

SYSTEM IMPACT STUDY
June 27, 2008

I. INTRODUCTION

Harper Lake, LLC ("HLLLC") applied to the California Independent System Operator ("CAISO") for interconnection of the proposed Harper Lake Solar Plant Project ("HLSP Project") pursuant to section 3.5 of the Large Generator Interconnection Procedures ("LGIP") issued under the CAISO Tariff. The HLSP Project, a solar thermal generating facility to be located in Hinkley, California (San Bernardino County), approximately twelve miles east of Kramer Junction and just west of Harper Lake, will have a maximum net plant output of 250 MW. The HLSP Project will consist of two solar concentrated Siemens steam turbines and associated 230/13.8 kV generator transformers. HLLLC proposes to interconnect the HLSP Project into the SCE electrical system and deliver energy and/or ancillary services to the California Independent System Operator ("CAISO") Controlled Grid utilizing the existing Kramer-Cool Water No.1 230 kV radial transmission lines. To interconnect the HLSP Project into the existing Kramer-Cool Water No.1 230 kV transmission line, a new substation will be needed. This substation (referred to in this study as "Hinkley"[7]) is to be located approximately 12.5 miles east from the existing Kramer Substation and approximately 31.7 miles northwest of the existing Cool Water Substation. The substation will also be needed to accommodate queued behind generation projects and will allow SCE the ability to loop the existing Kramer-Cool Water No.1 230 kV transmission line and provide for the required generation tie-line position. The HLSP Project's requested in-service date is January 1, 2010, with a commercial operation date of August 1, 2010.

SCE has performed the Interconnection System Impact Study (ISIS) to determine the adequacy of SCE's electrical system, including that portion of SCE's electrical system that is part of the CAISO Controlled Grid, to accommodate the HLSP Project. The Study was performed for two system conditions: a 2013 heavy summer with a one-in-ten load forecast and a 2013 light spring load forecast (65% of the heavy summer load). These conditions reflect the most critical expected loading condition for the transmission system in SCE's area. The study included all queued ahead generation projects in the study area ahead of the HLSP Project regardless of the in-service dates of such prior projects. The system load condition assumptions were based on the latest in-service date of all queued ahead projects. In addition to the 2013 year cases, SCE performed a sensitivity study to evaluate if the project could interconnect in advance of implementing any transmission facility upgrades which have been identified to be triggered by a queued ahead generation project. Such sensitivity was conducted as a means of providing HLLLC with the information required to evaluate the risk of congestion exposure while the facility upgrades are being implemented.

[7] The final name of the substation is subject to change once SCE finalizes the substation name evaluation efforts.

Results of the ISIS will be used as the basis to determine appropriate project cost allocation for facility upgrades in the Facilities Study. ***The study accuracy and results of the assessment of system adequacy are contingent on the accuracy of the technical data provided by HLLLC.*** Any changes from the data provided could void the study results. The ISIS report provides detailed Study assumptions and conditions of the system in which the ISIS was conducted.

II. STUDY CONDITIONS AND ASSUMPTIONS

A. Planning Criteria

The study was conducted by applying the NERC/WECC/CAISO Reliability Criteria. More specifically, the main criteria applicable to this study are as follows:

Power Flow Analysis

The following contingencies are considered for transmission and sub-transmission lines and 500/230 kV transformer banks ("AA-Banks"):

- Single Contingencies – Loss of one line or one AA-Bank and selected overlapping outages of one generating unit and one line
- Double Contingencies – Loss of two lines or one line and one AA-Bank identified as common mode failure elements (Outages of two AA-Banks are beyond the Planning Criteria)

The following reliability criteria are used:

Transmission Lines	Base Case	Limiting Component Normal Rating
	N-1	Limiting Component A-Rating
	N-2	Limiting Component B-Rating
AA-Banks (500/230 kV) Transformer Banks	Base Case	Normal Loading Rating
	Long Term & Short Term	As defined by SCE Operating Bulletin

System upgrades for transmission lines are generally recommended for all reliability criteria violations. Special Protection Systems (SPS) may be allowed for single contingency and credible double contingencies reliability criteria violations in place of system upgrades, provided that the SPS complies with the CAISO Planning Standards' New Generator SPS Guidelines.

The following principles were used in determining whether congestion management, SPS, or facility upgrades are required to mitigate base case, single contingency, and/or double contingency overloads:

- Congestion management, as a means to mitigate base case overloads, can be used if it is determined to be manageable and CAISO Operations concurs with the

implementation. Congestion management to mitigate criteria violations may include curtailment of the proposed generation project in real time as needed.

- Facility upgrades will be required if it is determined that the use of congestion management for base case overloads is unmanageable.

- SPS will be recommended for criteria violations under outage conditions if it effectively mitigates system problems, does not jeopardize system integrity, does not exceed the current CAISO single and double contingency tripping limitations, does not adversely impact existing or proposed SPS in the area, and conforms to existing CAISO SPS Guidelines.

- Facility upgrades will be required if the use of an SPS is determined to be ineffective, system integrity is jeopardized, the amount of generation tripping exceeds the current CAISO single and double contingency tripping limitations, adverse impacts are identified to existing or proposed SPS in the area, or the SPS does not conform with the existing SPS Guidelines.

The following study method was implemented to assess the extent of possible congestion:

a) Under Base Case with all transmission facilities in service, the system was evaluated with all existing interconnected generation and all generation requests in the area that have a queue position ahead of this request (pre-project). Included in the study are CAISO-approved transmission projects queued ahead of the generation interconnection request.

b) Under Base Case with all transmission facilities in service, the system was reevaluated with the inclusion of the Project (post-project).

If the normal loading limits of facilities are exceeded in (a), the overload is identified as an existing overload that was triggered by a project in queue ahead of the HLSP Project. If the normal loading limits of facilities are exceeded in (b) and were not exceeded in (a), the overload is identified as triggered by the addition of the HLSP Project. The HLSP Project and other market participants in the area may be subjected to congestion management, potential upgrade cost and/or participation of any proposed SPS if the project addition aggravates or triggers the overload. Additionally, the HLSP Project may have to participate in mitigation of overloads triggered by subsequent projects in queue, subject to FERC protocols and policies.

Results of these studies should identify:

a) If capacity is available to accommodate the proposed HLSP Project and all projects ahead in queue without the need for congestion management, SPS, or facility upgrades

b) if base case overloads exist in the area after the addition of all projects in queue ahead of the HLSP Project

c) if base case overloads are triggered in the area after the addition of the HLSP Project

The range of base case congestion for the HLSP Project will be determined by reducing market generation in the area including the HLSP Project. For single and double element outage conditions, the same methodology will be used to identify how much generation tripping is required in order to determine if the use of an SPS is appropriate. Use of an SPS will be deemed inappropriate if the total amount of generation reduction is found to exceed 1,150 MW under loss of one transmission element and 1,400 MW under loss of two transmission elements. These limits are established by the CAISO utilizing the current Spinning Reserve Criteria.

B. Generation and Load Assumptions

To simulate the SCE transmission system for analysis, the study used databases that were developed to conduct SCE's Annual CAISO Controlled Facilities Expansion Program. The study considered two load conditions: 2013 heavy summer and a 2013 light spring case which assumed 65% of heavy summer load forecast. In addition, the study evaluated conditions with dispatch of generation inside and outside of the SCE service territory and electrical system in a manner that maximized loadings in the north of Lugo area. This included adjusting SCE imports on the West-of-River (Path 46) and modeling all pertinent queued ahead generation projects in the vicinity of the HLSP Project. Generation assumptions are provided below in Table 1-1. Heavy summer and light spring load study assumptions are provided below in Tables 1-2 and Table 1-3 respectively.

Table 1-1
ACTIVE QUEUED GENERATION PROJECTS MODELED IN THE STUDY

CAISO Queue #	Interconnection Point	(MW)	Requested Operating Date
SCE WDT112	Casa Diablo 115kV	16.54	2007
11	Mountain Pass 115kV	63	2010
33	Control 115kV Bus	10	In-Service
SCE WDT164	Gale 115kV Bus	80	2006
58	Churchill-Bishop	62	2007
68	Pisgah	850	2009
83	Lugo-Pisgah 230kV	60	2008
89	Victor 230kV Bus	570	2010
106	Mohave 500 kV	635 [2]	2009
109[3]	Pisgah 230kV	550	2010
110[3]	Pisgah 230kV	1400 [2]	2013
114[3]	Lugo-Pisgah 230 kV	150	2008
115[3]	Lugo-Pisgah 230 kV	150	2008
116[3]	Lugo-Pisgah 230 kV	50	2008
~~118~~	~~Mohave 500 kV~~	~~550~~ [1]	~~2009~~
120[3]	Mohave 500 kV	1200 [2]	2011
125	**Kramer 230 kV**	**250**	**2010**

[1] This project was initially included in the System Impact Study Plan but has since been withdrawn and was thus not modeled in the study.

[2] These projects were included in the base case but were not dispatched in the study for the following reasons:

- The projects are injecting power directly to the 500 kV bulk power system and do not contribute impacts to the 230 kV network used to interconnect the HLSP Project.
- These projects not dispatched will utilize available capacity on Path 46 and Path 49 thereby limiting the amount of power to no more than the established WECC Path Ratings.
- The amount of transmission capacity available to export Lugo Area excess power is less than the total amount of generation interconnection requests up to and including the HLSP Project. Consequently, congestion management will be required to ensure system dispatch conditions are such that the total amount of Lugo Area export is maintained to within limits.

[3] These projects have been identified to be moved into the Transition Cluster in the CAISO's Petition for Waiver of Tariff Provisions to Accommodate Transition to Reformed Large Generator Interconnection Procedures, and Motion to Shorten Comment Period FERC Filing. If approved, these projects will need to be removed from the HLSP Project starting base cases and a Technical Study will be required to identify the revised system impacts.

Table 1-2
Heavy Summer Load (MW) Assumptions

SUBSTATION	2008	2009	2010	2011	2012	2013	2014	2015	2016	2017
ALAMITOS	196	198	201	203	200	199	199.2	194	194	194
ANTELOPE-BAILEY	814	897	925	970	1037	729	738.3	805	825	833
ANTELOPE EAST	0	0	0	0	0	334	333.9	334	340	355
BARRE	736	743	804	816	830	837	847.5	854	864	877
BLYTHE	56	57	58	59	59	60	60.3	61	61	61
CAMINO	2	2	2	2	2	2	2.0	2	2	2
CENTER	507	513	522	528	529	527	527.9	532	535	538
CHEVMAIN	130	130	130	130	130	130	130.0	130	130	130
CHINO	758	776	930	960	974	993	998.3	1010	1018	1049
CIMA	1	1	1	1	1	1	1.0	1	1	1
DEL AMO	513	520	477	485	484	485	486.3	497	499	497
DEVERS - MIRAGE	1026	474	488	500	516	529	542.3	553	565	578
EAGLE MT.	2	2	2	2	2	2	2.0	2	2	2
EAGLE ROCK	203	205	208	210	213	215	210.3	212	213	214
EL CASCO	0	182	195	206	214	222	228.2	234	241	248
ELLIS	656	670	682	696	701	713	720.6	730	738	747
EL NIDO	366	369	373	377	378	378	378.7	377	379	380
ETIWANDA	620	645	668	687	703	720	730.7	745	759	777
ETIWANDA "AMERON"	70	70	70	70	70	70	70.0	70	70	70
GOLETA	280	284	287	291	292	292	293.0	295	296	297
GOULD	122	124	126	129	130	133	134.5	138	140	142
HINSON	557	562	569	573	571	570	568.5	568	570	570
JOHANNA	454	468	475	529	524	525	526.0	528	532	542
JURUPA (city Riverside)	0	270	273	276	275	276	275.4	277	276	276
KRAMER	335	359	376	389	398	407	416.0	420	426	447
LA CIENEGA	497	504	510	516	517	518	528.5	531	534	537
LA FRESA	684	691	699	705	704	703	702.8	706	708	709
LAGUNA BELL	596	602	607	613	612	612	612.4	614	616	616
LEWIS	548	553	564	569	573	577	575.7	576	579	577
LIGHTHIPE	521	528	533	540	540	541	542.4	541	544	545
MESA	607	615	627	638	639	642	641.2	644	649	651
MIRAGE	0	503	527	549	565	575	584.3	596	609	622
MIRA LOMA	826	849	745	767	779	785	804.0	822	784	780
MOORPARK	800	828	888	883	892	899	905.8	914	925	940
OAK VALLEY	0	0	0	0	0	0	0.0	0	0	0
OLINDA	410	428	437	446	451	456	460.1	469	474	479
PADUA	696	703	707	716	715	717	725.2	733	742	745
RECTOR	735	769	797	820	843	872	884.5	514	526	537
RIO HONDO	719	733	745	753	754	754	758.4	761	767	771
SAN BERNARDINO	628	632	646	662	672	682	689.5	702	716	725
SAN JOAQUIN	0	0	0	0	0	0	0.0	392	402	410
SANTA CLARA	621	638	628	672	682	692	699.2	704	713	722
SANTIAGO	756	788	815	846	867	881	896.4	910	923	943
SAUGUS	773	793	812	834	850	866	881.4	901	919	937
SPRINGVILLE	229	233	241	255	262	262	275.2	281	288	295
VALLEY	1742	1833	1916	1995	1769	1809	1848.7	1878	1927	1951
ALBERHILL	0	0	0	0	271	284	296.5	323	334	340
VESTAL	146	148	151	153	153	154	154.5	156	157	158
VICTOR	627	656	676	706	715	728	750.8	761	776	799
VIEJO	358	366	377	382	385	387	389.6	393	396	400
VILLA PARK	760	768	779	745	745	745	741.4	737	739	737
VISTA 66 KV	1052	772	783	797	809	819	825.9	835	900	919
VISTA 115 KV	686	589	601	613	614	614	621.3	623	627	630
WALNUT	737	748	752	758	759	758	756.4	758	758	759
Total	**25,159**	**25,795**	**26,409**	**27,023**	**27,369**	**27,680**	**27,973**	**28,343**	**28,711**	**29,062**

Southern California Edison Protected Materials, **Confidential: Contains Critical Energy Infrastructure Information (CEII)**

Table 1-3
Light Spring Load (MW) Assumptions

SUBSTATION	2008	2009	2010	2011	2012	2013	2014	2015	2016	2017
ALAMITOS	127	129	131	132	130	130	129	126	126	126
ANTELOPE-BAILEY	529	583	602	630	674	474	480	523	536	541
ANTELOPE EAST	0	0	0	0	0	217	217	217	221	231
BARRE	478	483	522	530	539	544	551	555	562	570
BLYTHE	36	37	38	38	39	39	39	40	39	40
CAMINO	1	1	1	1	1	1	1	1	1	1
CENTER	329	334	339	343	344	342	343	346	348	349
CHEVMAIN	85	85	85	85	85	85	85	85	85	85
CHINO	493	504	605	624	633	645	649	657	661	682
CIMA	1	1	1	1	1	1	1	1	1	1
DEL AMO	334	338	310	315	315	315	316	323	325	323
DEVERS - MIRAGE	667	308	317	325	336	344	352	360	367	376
EAGLE MT.	1	1	1	1	1	1	1	1	1	1
EAGLE ROCK	132	134	135	137	138	140	137	138	139	139
EL CASCO	0	119	127	134	139	144	148	152	157	161
ELLIS	426	435	443	452	455	464	468	475	480	486
EL NIDO	238	240	243	245	245	246	246	245	247	247
ETIWANDA	403	419	434	446	457	468	475	485	494	505
ETIWANDA "AMERON"	46	46	46	46	46	46	46	46	46	46
GOLETA	182	184	187	189	190	190	190	191	193	193
GOULD	79	81	82	84	85	86	87	90	91	92
HINSON	362	365	370	372	371	370	370	370	370	370
JOHANNA	295	304	309	344	341	341	342	343	346	352
JURUPA (city Riverside)	0	176	178	179	179	179	179	180	180	180
KRAMER	218	234	245	253	258	264	270	273	277	291
LA CIENEGA	323	327	331	335	336	337	344	345	347	349
LA FRESA	445	449	454	458	458	457	457	459	460	461
LAGUNA BELL	387	391	395	398	398	398	398	399	400	401
LEWIS	356	360	367	370	372	375	374	375	376	375
LIGHTHIPE	339	343	347	351	351	352	353	351	353	354
MESA	394	400	408	414	415	417	417	419	422	423
MIRAGE	0	327	343	357	367	373	380	388	396	404
MIRA LOMA	537	552	484	499	506	510	523	534	510	507
MOORPARK	520	538	577	574	580	584	589	594	601	611
OAK VALLEY	0	0	0	0	0	0	0	0	0	0
OLINDA	266	278	284	290	293	297	299	305	308	312
PADUA	452	457	460	466	464	466	471	476	483	484
RECTOR	478	500	518	533	548	567	575	334	342	349
RIO HONDO	467	476	485	489	490	490	493	495	499	501
SAN BERNARDINO	408	411	420	430	437	443	448	456	465	471
SAN JOAQUIN	0	0	0	0	0	0	0	255	261	267
SANTA CLARA	403	415	408	437	443	450	454	458	463	469
SANTIAGO	491	512	530	550	564	573	583	592	600	613
SAUGUS	503	516	528	542	553	563	573	586	598	609
SPRINGVILLE	149	152	156	166	171	170	179	183	187	192
VALLEY	1133	1192	1246	1297	1150	1176	1202	1221	1252	1268
ALBERHILL	0	0	0	0	176	185	193	210	217	221
VESTAL	95	96	98	100	99	100	100	101	102	103
VICTOR	407	426	439	459	464	473	488	494	505	519
VIEJO	233	238	245	249	250	252	253	255	258	260
VILLA PARK	494	499	506	484	484	484	482	479	480	479
VISTA 66 KV	684	502	509	518	526	532	537	543	585	597
VISTA 115 KV	446	383	390	398	399	399	404	405	408	410
WALNUT	479	486	489	493	494	493	492	493	493	493
Total	**16,353**	**16,767**	**17,166**	**17,565**	**17,790**	**17,992**	**18,182**	**18,423**	**18,662**	**18,890**

Southern California Edison Protected Materials, **Confidential: Contains Critical Energy Infrastructure Information (CEII)**

C. HLLLC – Harper Lake Solar Plant Project

The Harper Lake Solar Plant (HLSP) Project is geographically located in Hinkley, California approximately twelve miles east of Kramer Junction and west of Harper Lake. Specifically, the project will be in San Bernardino County in portions of Township 11N, Range 6W, Sections 25, 28, 29, 30, 32, and 33. The HLSP Project will consist of two Siemens solar concentrated steam turbines with a total net output of 250 MW and their associated 230/13.8 kV generator step-up transformers. It should be noted that each unit is capable of 150 MW but the output will be limited to no more than 250 MW combined.

HLLLC requested the Point of Interconnection (POI) for the HLSP Project to be one of the existing Kramer-Cool Water (northern circuit) 230 kV transmission lines. The HLSP Project would be interconnected to this transmission line by constructing a new 230 kV switching substation, referred to in this study as Hinkley, in order to loop the existing Kramer-Cool Water No.1 230 kV transmission line. The HLSP Project would then be connected to the Hinkley Substation by a customer owned 230 kV generation tie-line as shown below in Figure 1-1. The HLSP Project requested an interconnection date of January 1, 2010 and commercial operating date of August 1, 2010.

Figure 1-1
HLLLC – Harper Lake Solar Plant Project
One-Line Diagram

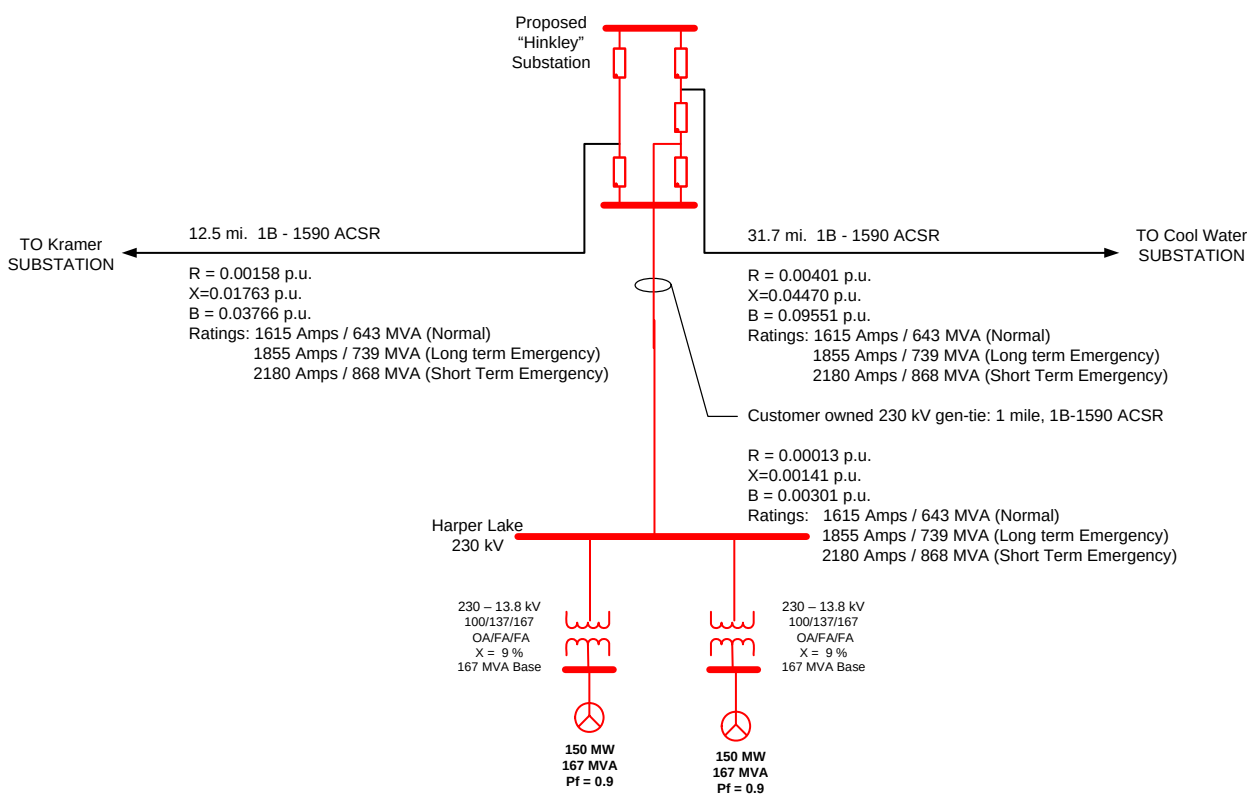

The HLSP Project includes one solar concentrating thermal power plant, based on parabolic trough technology. The parabolic trough is a solar thermal energy collector constructed as a long parabolic mirror. Each solar trough mirror will track the sun throughout the day and reflect concentrated solar energy to a receiver tube known as a Dewar tube, which runs the length of the parabolic trough. The receiver tube is filled with a heat transfer fluid, such as oil, which absorbs the concentrated sunlight and is used to heat steam in a standard turbine generator. The high temperature oil circulates through a heat exchanger to generate steam which is used to run a conventional steam turbine. Dynamics data used to represent the steam turbine generator in the GE PSLF Dynamic Software, as provided by the project developer, are shown below in Table 1-4 (generator), Table 1-5 (excitation system), Table 1-6 (governor) and Table 1-7 (power system stabilizer).

TABLE 1-4
STEAM TURBINE GENERATOR MODEL (GENROU)

Variable	Value	Description
MVA	167.0	Generator MVA Base
Tpdo	9.191	D-axis transient rotor time constant, sec
Tppdo	0.043	D-axis sub-transient rotor time constant, sec
Tpqo	2.50	Q-axis transient rotor time constant, sec
Tppqo	0.15	Q-axis sub-transient rotor time constant, sec
H	3.33228	Inertia constant, sec
D	0.0	Damping factor, per-unit
Ld	2.36	D-axis synchronous reactance, per-unit
Lq	2.24	Q-axis synchronous reactance, per-unit
Lpd	0.267	D-axis transient reactance, per-unit
Lpq	0.473	Q-axis transient reactance, per-unit
Lppd	0.183	D-axis sub-transient reactance, per-unit
Lppq	0.183	Q-axis sub-transient reactance, per-unit
Ll	0.143	Stator leakage reactance, per-unit
S1	0.115	Saturation factor at 1.0 per-unit flux
S12	0.571	Saturation factor at 1.2 per-unit flux
Ra	0.0	Stator resistance, per-unit
Rcomp	0.0	Compounding resistance for voltage control, per-unit
Xcomp	0.0	Compounding reactance for voltage control, per-unit

TABLE 1-5
STEAM TURBINE EXCITATION SYSTEM MODEL (EXST4B)

Variable	Value	Description
Tr	0.02	Filter time constant, sec
Kpr	3.15	Proportional gain, per-unit
Kir	3.15	Integral gain, per-unit
Ta	0.02	Time constant, sec
Vrmax	1.00	Maximum controller output, per-unit
Vrmin	-0.87	Minimum controller output, per-unit
Kpm	1.00	Proportional gain of field voltage regulator, per-unit
Kim	0.00	Integral gain of field voltage regulator, per-unit
Vmmax	1.00	Maximum field voltage regulator output, per-unit
Vmmin	-0.87	Minimum field voltage regulator output, per-unit
Kg	0.00	Excitation limiter gain, per-unit
Kp	6.50	Potential source gain, per-unit
Angp	0.00	Phase angle of potential source, degrees
Ki	0.00	Current source gain, per-unit
Kc	0.08	Excitation regulation factor, per-unit
Xl	0.00	Main generator leakage reactance, per-unit
Vbmax	8.00	Maximum excitation voltage

TABLE 1-6
STEAM TURBINE GOVERNOR MODEL (GGOV1)

Variable	Value	Description
r	0.05	Permanent of droop, per-unit
rselect	1.0	Feedback signal for droop
Tpelec	1.0	Electrical power transducer time constant, sec
maxerr	0.05	Maximum value for speed error signal
minerr	-0.05	Minimum value for speed error signal
Kpgov	10.0	Governor proportional gain
Kigov	2.0	Governor integral gain
Kdgov	0.0	Governor derivative gain
Tdgov	1.0	Governor derivative controller time constant
vmax	1.0	Maximum valve position limit
Vmin	0.15	Minimum valve position limit
Tact	0.5	Actuator time constant
Kturb	1.5	Turbine gain
Wfnl	0.2	No load fuel flow, per-unit
Tb	0.5	Turbine lag time constant
Tc	0.0	Turbine lead time constant
Flag	1.0	Switch for fuel source characteristic
Teng	0.0	Transport lag time constant for diesel engine
Tfload	3.0	Load limiter time constant
Kpload	2.0	Load limiter proportional gain for PI controller
Kiload	0.67	Load limiter integral gain for PI controller
Ldref	1.0	Load limiter reference value, per-unit
Dm	0.0	Speed sensitivity coefficient, per-unit
ropen	0.10	Maximum valve opening rate, per-unit / second
rclose	-0.10	Minimum valve opening rate, per-unit / second
Kimw	0.002	Power controller (reset) gain
Pmwset	75.0	Power controller setpoint, MW
aset	0.01	Acceleration limiter setpoint, per-unit / second
Ka	10.0	Acceleration limiter gain
Ta	0.1	Acceleration limiter time constant, second
db	0.0	Speed governor dead band
Tsa	4.0	Temperature detection lead time constant, second
Tsb	5.0	Temperature detection lag time constant, second
rup	99.0	Maximum rate of load limit increase
rdown	-99.0	Minimum rate of load limit increase

TABLE 1-7
STEAM TURBINE POWER SYSTEM STABILIZER MODEL (PSS2A)

Variable	Value	Description
J1	1.0	Input signal #1 code
K1	0.0	Input signal #1 remote bus number
J2	3.0	Input signal #2 code
K2	0.0	Input signal #2 remote bus number
Tw1	2.0	First washout on signal #1, sec
Tw2	2.0	Second washout on signal #1, sec
Tw3	2.0	First washout on signal #2, sec
Tw4	0.0	Second washout on signal #2, sec
T6	0.0	Time constant on signal #1, sec
T7	2.0	Time constant on signal #2, sec
Ks2	0.2	Gain on signal #2
Ks3	1.0	Gain on signal #2
Ks4	1.0	Gain on signal #2
T8	0.5	Lead ramp tracking filter
T9	0.1	Lag ramp tracking filter
n	1.0	Order of ramp tracking filter
m	5.0	Order of ramp tracking filter
Ks1	10.0	Stabilizer gain
T1	0.25	Lead/lag time constant, sec
T2	0.04	Lead/lag time constant, sec
T3	0.20	Lead/lag time constant, sec
T4	0.03	Lead/lag time constant, sec
Vstmax	0.1	Stabilizer output max limit, per-unit
Vstmin	-0.1	Stabilizer output min limit, per-unit
a	1.0	Lead/lag num. gain (not in IEEE model)
Ta	0.0	Lead/lag time constant, sec (not in IEEE model)
Tb	0.0	Lead/lag time constant, sec (not in IEEE model)

D. Transmission Upgrades to be Included in the HLSP Project Base Cases

A number of transmission upgrades are needed to support queued ahead generation projects in the North of Lugo and East of Lugo areas. These projects, outlined below, were included into the base cases in order for the System Impact Study to determine if additional facilities would be needed to support the HLSP Project.

PISGAH AREA

The studies performed for the queued ahead generation projects in the Pisgah area identified a number of facility upgrades to be required. These upgrades involved the following:

- Expansion of the existing SCE Pisgah 230 kV Substation, sized to accommodate 500/230 kV facilities, with up to four 500/230 kV transformers, two sets of 200 MVAr 500 kV capacitor banks, and four sets of 79.2 MVAr 230 kV capacitor banks.

- Removal of one existing Lugo-Pisgah 230 kV transmission line and replacement with a new Lugo-Pisgah 500 kV transmission line.[8]

- Looping of the existing Lugo-Eldorado 500 kV transmission line into the new 500 kV portion of the expanded Pisgah Substation, by "cutting" the line near the Pisgah Substation and connecting each portion to the Pisgah Substation.

- Installation of appropriate fully redundant and diverse telecommunication facilities to support both a special protection system that would trip generation projects connecting to the Pisgah Substation under specific outage contingencies, as well as provide overall system protection.

LUGO TO PISGAH 230 kV CORRIDOR

Feasibility and System Impact Studies have been performed for four queued ahead projects that have requested interconnection to the existing 230 kV transmission facilities connecting the Lugo Substation with the Pisgah Substation. Because one of the existing lines has been identified to be removed in order to make room for a new 500 kV transmission line (as discussed above), only one of the two existing Lugo-Pisgah 230 kV transmission lines (northern circuit) will be available. This remaining Lugo-Pisgah 230 kV transmission line has a relatively low capacity value of 289 MVA (725 amps) with no emergency capability. The total amount of generation projects in queue ahead of the HLSP Project requesting interconnection to this transmission line is in excess of 400 MW. In order to interconnect these projects, three new substations will be required and the line will need to be "cut" into two segments, with one ultimately connecting to Lugo and the other ultimately connecting to

[8] Actual design of these transmission upgrades will depend on many factors including the development of upgrade alternatives necessary to support a Proponent's Environmental Assessment (PEA) and an Application for a Certificate of Public Convenience and Necessity (CPCN). Some of the alternatives that would be considered include, but are not limited to: 1) the removal of both existing single-circuits and replacement with a new 500 kV double-circuit transmission line, 2) the construction of a new single-circuit on new right-of-way without removing any existing facilities, and 3) a combination of both.

Pisgah, as shown below in Figure 1-2. The three new substations modeled in the base case include the following:

- New Desert View Substation, designed to ultimately accommodate 500/230/115 kV facilities, with up to four 500/230 kV transformer banks, and is assumed to be located approximately 16 miles east of the Lugo Substation and operated in a radial configuration to the Lugo Substation.

- New Abelia 230 kV Switching Station, designed as a collector substation for new generation interconnection projects, and is assumed to be located approximately 21 miles east of the new Desert View Substation.

- New Galway 230 kV Switching Station, designed as a collector substation for new generation interconnection projects, and is assumed to be located approximately 15 miles west of the Pisgah Substation.

Figure 1-2
Upgrades for Queued Ahead Generation Projects
Lugo-Pisgah 230 kV Transmission Corridor

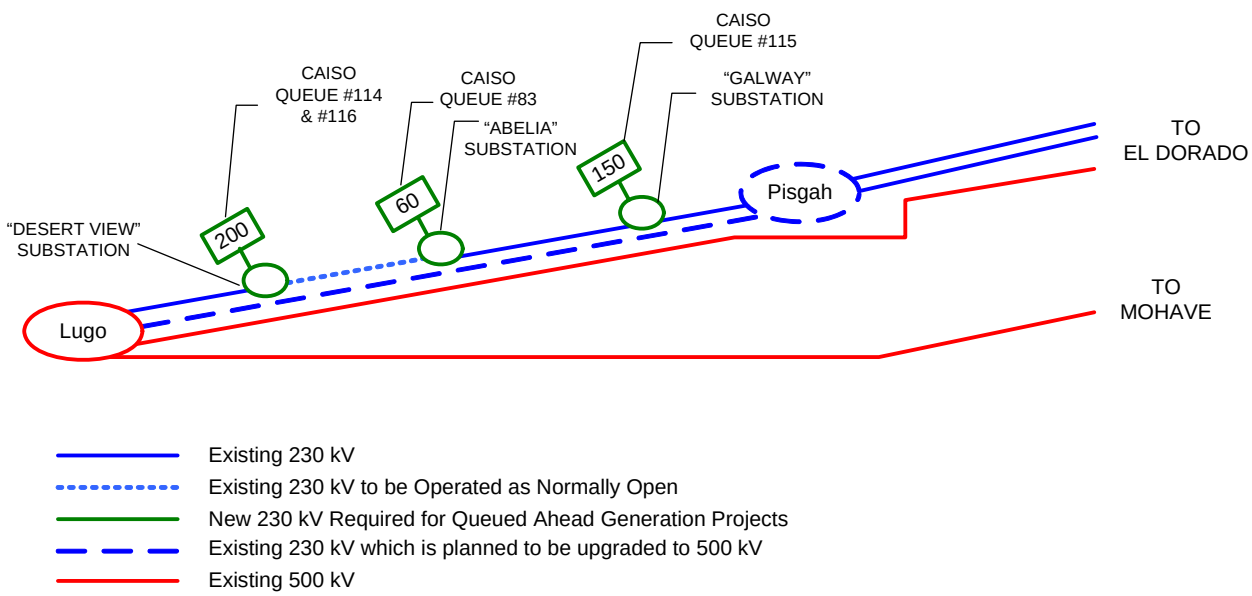

In addition to the above three new substations, the line segment of the existing Lugo-Pisgah No.1 230 kV (northern circuit) transmission line may be rebuilt as part of the removal of the existing Lugo-Pisgah No.1 230 kV and replacement with 500 kV. One of the alternatives for the 500 kV upgrade involves utilizing existing right-of-way between Lugo Substation and the Mojave River. To allow for use of existing right-of-way, the alternative would involve the removal of both single circuit 230 kV lines and replacement with one new double-circuit 500 kV transmission line, with one of the circuits initially energized at 230 kV and connected to the remainder of the Lugo-Pisgah No.2 230 kV transmission line east of the Mojave River. If this alternative is not selected, then the existing Lugo-Pisgah No.1 230 kV transmission line will remain as is. As part of this ISIS, no upgrades were assumed on the existing Lugo-Pisgah No.1 230 kV transmission line.

LUGO TO CONTROL CORRIDOR

System Impact Studies and Technical Assessments have been performed for five queued ahead projects that have requested interconnection to transmission facilities north of Lugo (injecting power into the Victor and Control Substations). Results of these studies identified the need for a number of facility upgrades. These upgrades involved the following:

- Replacement of the existing 115 kV phase-shift transformer located at Inyo Substation with a greater phase-angle transformer.
- Construction of a new 230 kV transmission line between the Lugo Substation and Victor Substation (approximately 10-12 miles).
- Installation of third 500/230 kV transformer bank at Lugo Substation.
- Installation of appropriate fully redundant and diverse telecommunication facilities to support modification to existing special protection systems (Bishop, HDPP and Kramer SPS).

E. Existing Special Protection Systems

The SCE North of Lugo transmission system is equipped with three existing special protection systems to mitigate existing reliability issues under specific outage conditions. The addition of the HLSP Project may necessitate the need to upgrade some of these existing special protection systems, mainly the High Desert Power Project SPS and the Kramer SPS.

HIGH DESERT POWER PROJECT SPS

This SPS is designed to prevent transmission line or transformer bank overloads, as well as system instability. These problems could occur during high generation conditions under certain transmission component outages. The following outlines the outages that can result in the potential operation of the HDPP SPS:

Single Outages

1. Loss of Lugo-Victor No.1 230 kV Transmission Line
2. Loss of Lugo-Victor No.2 230 kV Transmission Line
3. Loss of Lugo 500/230 No.1 Transformer Bank (AA-Bank)
4. Loss of Lugo 500/230 No.2 Transformer Bank (AA-Bank)

Double Outages

1. Loss of Lugo-Victor No.1 and No.2 230 kV Transmission Lines
2. Loss of Lugo 500/230 kV No.1 and No.2 Transformer Banks ("Safety Net")

Arming of the HDPP SPS is based on the Lugo-Victor No.1 and No.2 230 kV line flows, as well as the Lugo AA-Bank flows. The "Safety Net" is armed based on the sum flows of the two Lugo AA-Banks. Adding generation north of Lugo may result in changes to existing line

flows and may adversely affect the current arming levels. In addition to tripping generation under outage conditions, SCE System Operating Bulletin No.283 allows for curtailment of generation in the Victor Area when the SPS is inoperative.

KRAMER SPS

The Kramer SPS is designed to prevent transmission line or transformer bank overloads, as well as system instability in the Kramer Junction area. These problems could occur during high generation conditions under certain transmission component outages. The following outlines the outages that can result in the potential operation of the Kramer SPS:

Single Outages

1. Loss of Kramer-Inyokern-Randsburg No.1 115 kV Line
2. Loss of Kramer-Lugo No.1 230 kV Transmission Line
3. Loss of Kramer-Lugo No.2 230 kV Transmission Line

Double Outages

1. Loss of both Kramer-Lugo No.1 and No.2 230 kV Transmission Lines
2. Loss of both Lugo 500/230 kV No.1 and No.2 Transformer Banks (Safety Net)

In addition to tripping generation under outage conditions, SCE System Operating Bulletin No.209 allows for curtailment of generation in the Inyokern Area when the 115 kV portion of the SPS is inoperative. SCE System Operating Bulletin No.209 also allows for curtailment of generation in the Kramer area when the 230 kV portion of the SPS is inoperative.

Arming of the 115 kV Kramer SPS portion is based on Kramer-Inyokern-Randsburg No.3 115 kV line flow, while arming of the 230 kV Kramer SPS portion is based on Kramer-Lugo No.1 and No.2 230 kV line flows. The "Safety Net" is armed based on the sum flows of the two Lugo AA-Banks. Adding generation north of Lugo may result in changes to existing line flows and may adversely affect the current arming levels.

F. Power Flow Study

The HLSP Project ISIS considered two power flow study scenarios. Each case was derived from the most current CAISO Transmission Expansion Plan Study base cases. Further description of the case assumptions are provided below and are summarized in Table 1-8:

a). SCE System with a 2013 Heavy Summer load forecast and all generation projects in queue ahead of the HLSP Project and associated upgrades if known, Case 1.

The study considered heavy load conditions with generation patterns and Path 46 imports dispatched in a manner that would stress the SCE system in the area of the interconnection of the HLSP Project. This was done in order to identify the extent of potential congestion. Generation in the area included regulatory must-take, all other existing generation in the North and East of Lugo areas, and all proposed generation

projects in queue ahead of the HLSP Project.

b). SCE System with a 2013 Heavy Summer load forecast and all generation projects in queue ahead of the HLSP Project and associated upgrades, if known, and the inclusion of the HLSP Project, Case 2.

Case 1 modified to include the HLSP Project with a net generation of 250 MW.

c). SCE System with a 2013 Light Spring load forecast and all generation projects in queue ahead of the HLSP Project and associated upgrades if known, Case 3

The study considered light load conditions with generation patterns and Path 46 imports dispatched in a manner that would stress the SCE system in the area of the interconnection of the HLSP Project. This was done in order to identify the extent of potential congestion. Generation in the area included regulatory must-take, all other existing generation in the North and East of Lugo areas, and all proposed generation projects in queue ahead of the HLSP Project.

d). SCE System with a 2013 Light Spring load forecast and all generation projects in queue ahead of the HLSP Project and associated upgrades, if known, and the inclusion of the HLSP Project, Case 4

Case 3 modified to include the HLSP Project with a net generation of 250 MW.

In addition to these base cases, a few sensitivity cases were examined to adequately identify the extent of potential congestion amounts by the proposed in-service date of January 1, 2010.

TABLE 1-8
POWER FLOW STUDY ASSUMPTIONS (MW)

	2013 Heavy Summer		2013 Light Spring	
Area Assumptions	Case 1 Pre-Project	Case 2 Post-Project	Case 3 Pre-Project	Case 4 Post-Project
Generation	21,513	21,535	11,518	11,551
Import	7,142	7,144	7,482	7,482
Load	27,996	27,996	18,456	18,456
Losses	659	684	543	577
Path Flows and Area Imports				
East-of-River (Path 49)	5,167	5,165	5,851	5,852
West-of-River (Path 46)	7,667	7,667	8,136	8,139
Midway-Vincent (Path 26)	1,140	1,146	800	816
South of Kramer	832	1,022	900	1,108
Local Lugo Area (230 kV)	2,187	2,403	2,209	2,425
Lugo Area Export (500 kV)	7,714	7,844	7,469	7,637
South of Lugo	6,192	6,227	5,357	5,478
Mira Loma Area Import	6,558	6,572	5,426	5,553
So. California Import Transfer	14,147	14,367	14,340	14,297

G. Transient Stability Study

For transient stability evaluation, three-phase-to-ground faults with normal clearing are studied for single contingencies; single-line-to-ground faults with delayed clearing are studied for double contingencies according to NERC/WECC planning criteria. The evaluation was conducted for the critical single and double contingencies affecting the area of interest listed below in Table 1-9. All outage cases were evaluated with the assumption that existing SPS would operate as designed where required. Tripping of the HLSP Project will be included if stability studies indicate that an SPS for the HLSP Project is required. Study results were evaluated utilizing the applicable planning criteria as summarized in Table 1-10.

TABLE 1-9
TRANSIENT STABILITY CRITICAL STUDY CASES

Bus Fault Location		Fault Type	Fault Duration	Outage	SPS
Substation	**Voltage**				
Lugo	500 kV	3θ	4 cycles	Lugo-Rancho Vista 500 kV T/L	
Lugo	500 kV	3θ	4 cycles	Lugo-Mira Loma No.2 500 kV T/L	
Lugo	500 kV	3θ	4 cycles	Lugo-Vincent No.1 500 kV T/L	
Lugo	500 kV	3θ	4 cycles	Lugo-Victorville 500 kV	
Lugo	500 kV	3θ	4 cycles	Lugo-Pisgah No.1 500 kV T/L	
Victor	230 kV	3θ	6 cycles	Victor-Caldwell 230 kV T/L	
Kramer	230 kV	3θ	6 cycles	Kramer-Lugo No.1 230 kV T/L	Kramer
Lugo	230 kV	3θ	6 cycles	Lugo-Victor No.1 230 kV T/L	
Desert View	230 kV	3θ	6 cycles	Lugo-Desert View 230 kV T/L	
Kramer	115 kV	3θ	7 cycles	Kramer-Victor 115 kV Line	
Lugo	500 kV	1θ	12 cycles	Lugo-Mira Loma No.2 and No.3 500 kV T/Ls	
Lugo	500 kV	1θ	12 cycles	Lugo-Vincent No.1 and No.2 500 kV T/Ls	
Lugo	500 kV	1θ	12 cycles	Lugo-Pisgah No.1 and No.2 500 kV T/Ls	Other
Kramer	230 kV	1θ	12 cycles	Kramer-Lugo No.1 and No.2 230 kV T/Ls	Kramer
Lugo	230 kV	1θ	12 cycles	Lugo-Victor No.1 and No.2 230 kV T/Ls	HDPP
Kramer	115 kV	1θ	7 cycles	Kramer-Victor 115 kV and Kramer-Roadway-Victor 115 kV Lines	
Lugo	500 kV	1θ	12 cycles	Lugo-Victorville 500 kV	

Table 1-10
WECC DISTURBANCE-PERFORMANCE TABLE OF ALLOWABLE EFFECTS ON OTHER SYSTEMS
(in addition to NERC requirements)

NERC and WECC Categories	Outage Frequency Associated with the Performance Category (Outage/Year)	Transient Voltage Dip Standard	Minimum Transient Frequency Standard	Post-Transient Voltage Deviation Standard (See Note 2)
A	Not Applicable	Nothing in Addition to NERC		
B	≥ 0.33	Not to exceed **25%** at load buses or **30%** at non-load buses. Not to exceed **20% for more than 20 cycles** at load buses.	Not below **59.6 Hz** for 6 cycles or more at a load bus	Not to exceed **5%** at any bus
C	0.033 – 0.33	Not to exceed 30% at any bus. Not to exceed **20% for more than 40 cycles** at load buses.	Not below **59.0 Hz** for 6 cycles or more at a load bus	Not to exceed **10%** at any bus
D	< 0.033	Nothing in Addition to NERC		

Note 2: As an example in applying the WECC Disturbance-Performance Table, Category B disturbance in one system shall not cause a transient voltage dip in another system that is greater than 20% for more than 20 cycles at load buses, or exceed 25% at load buses or 30% at non-load buses at any time other than during the fault.

H. Post-Transient Voltage Study

The power flow study voltage results were used as a screen to identify those contingencies that may require additional post-transient voltage studies. Single and double contingencies identified in the power flow to have a voltage drop in excess of 5% were selected for post-transient voltage analysis. The Post-transient voltage studies compare voltage deviations to the NERC/WECC/CAISO reliability requirements including the SCE guidelines of 7% for single contingency outages and 10% for double contingency outages, and identify those outages which result in a criteria violation. Mitigation measures will be recommended for any criteria violation identified.

I. Short-Circuit Duty Study

To determine the impact on short-circuit duty, within SCE's electrical system, after inclusion of the HLSP Project, the study calculated the maximum symmetrical three-phase-to-ground short-circuit duties. Generator and transformer data represented in the generator and transformer data sheets provided by the customer were utilized. Bus locations where short-circuit duty was increased with the proposed HLSP Project by at least 0.1 kA and the duty was in excess of 60% of the minimum breaker nameplate rating were flagged for further review. Upon completion of the detailed circuit breaker review, circuit breakers exposed to

fault currents in excess of 100 percent of their interrupting capacities will need to be replaced or upgraded, whichever is appropriate. It should be noted that other WECC entities may request specific information within the WECC process to evaluate potential impact to their respective systems for this project addition.

J. Deliverability Assessment

In accordance with LGIP sections 3.3.2 and 3.3.3, a Deliverability Assessment was performed to determine the qualified capacity of the Project from a Resource Adequacy perspective. The study focused on the ability of the system to accommodate the output of the Project to the aggregate of load under the conditions when resources are needed the most, such as during summer peak conditions when resource shortage is more likely to occur. For more details regarding Deliverability Assessment, including the methodology and modeling requirements for the deliverability base case, please refer to the following CAISO website link: http://www.caiso.com/1c44/1c44b5c31cce0.html.

As required by the LGIP, deliverability assessment results need to provide the following information for this Project regarding its level of deliverability:

- The amount of capacity that can be deemed deliverable without additional upgrade(s).
- The upgrade(s) needed for this project to be deemed fully deliverable.

Please note that upgrades identified through this deliverability assessment (Delivery Network Upgrades) are discretional upgrades implemented for those customers who want their project to be fully deliverable. Generation projects may proceed to interconnect to the CAISO Controlled Grid without Delivery Network Upgrades provided that all the required Reliability Network Upgrades have been implemented. However, a developer's decision to interconnect without the identified Delivery Network Upgrade(s) could result in the project losing its eligibility to receive capacity payments, as allowed under the CPUC Resource Adequacy program.

K. Cost Estimates

Non-binding cost estimates will be derived for the "phased" portion of the facility upgrades identified as needed to reliably interconnect the HLSP Project to the grid. These estimates will be developed without the benefit of:

- Detailed substation site review,
- Detailed right-of-way review,
- Detailed telecommunication facility review,
- Detailed system protection review,
- Detailed weather studies,
- Detailed environmental assessments, and
- Preliminary engineering

These limitations could affect the scope of facilities, the phasing of the identified facilities, the cost, and the viability of the mitigation plans identified in this study.

L. Timelines for Implementing Facility Upgrades

Timelines for the completion of facility upgrades to accommodate new projects are based on a number of factors. For the most part, the driving factors include the following:

- Time requirements to prepare the Proponents Environmental Assessment (PEA) in support of an application for a Certificate of Public Convenience and Necessity (CPCN) or Permit to Construct (PTC)
- CPCN or PTC Application review and approval process (by State and Federal Agencies)
- Estimated material acquisition lead times
- Construction of facilities

III. GENERATOR ELECTRIC GRID FAULT RIDE-THROUGH CAPABILITY CRITERIA AND POWER FACTOR CRITERIA

WECC has adopted a Generator Electrical Grid Fault Ride-Through Capability Criteria. SCE currently supports a Low Voltage Ride-Through Criteria to ensure continued reliable service. The Criteria is summarized as follows:

1. Generator is to remain in-service during system faults (three phase faults with normal clearing and single-line-to-ground with delayed clearing) unless clearing the fault effectively disconnects the generator from the system.

2. During the transient period, a generator is required to remain in-service for the low voltage and frequency excursions specified in WECC Table W-1 as applied to the load bus constraint. These performance criteria are applied to the generator interconnection point, not to the generator terminals.

3. Generators may be tripped after the fault period if this action is intended as part of a SPS.

4. This Standard will not apply to individual units or to a site where the sum of the installed capabilities of all machines is less than 10 MVA, unless it can be proven that reliability concerns exist.

5. The performance criteria of this Standard may be satisfied with performance of the generators or by installing equipment to satisfy the performance criteria.

6. The performance criterion of this Standard applies to any generation independent of the interconnected voltage level.

7. No exemption from this Standard will be given because of minor impact to the interconnected system.

8. Existing generators that go through any refurbishments or any replacements are then required to meet this Standard.

IV. STUDY RESULTS

A. Power Flow Analysis

The study focused on identifying system thermal overload problems within SCE's service territory and electrical system.

Pre-Project Conditions

Previous studies for higher queued projects have identified significant thermal overloads and voltage depression in the Lugo and Pisgah areas. The base cases would not solve when all the higher queued projects were modeled without the corresponding system upgrades, due to system voltages being severely depressed to the point of collapsing. Not dispatching queued ahead projects with requested in-service dates later than 2010 resulted in solved base cases with thermal overloads on the following set of existing transmission facilities:

- Lugo-Pisgah No.1 and No.2 230 kV transmission lines
- Lugo-Victor No.1 and No.2 230 kV transmission lines
- Lugo 500/230 kV No.1 and No.2 transformer banks

The addition of the HLSP Project would aggravate overloads on the Lugo 500/230 kV transformer banks, as well as overloads on the two Lugo-Victor 230 kV transmission lines. Therefore, the system can not accommodate the addition of the HLSP Project without the system upgrades identified for the higher-queued projects.

Base Case Conditions

To determine whether additional facilities would be needed to support the HLSP Project, the system upgrades in the Lugo and Pisgah areas, as listed in Section II.D, were modeled. In addition, in order to provide acceptable base cases which would properly solve, some higher queued projects that would inject power directly into the 500 kV bulk power system at the Eldorado, Mohave, and Pisgah (proposed) 500 kV Substations were not dispatched in the study as indicated in Table 1-1.

With the above assumptions made and the proposed system upgrades in place, the studies identified that the addition of the HLSP Project triggers new base case overloads under both summer and spring load conditions as summarized below in Table 2-1, and illustrated in Figure 2-1 through Figure 2-4.

Table 2-1
Base Case Thermal Overloads with All Prior Triggered Upgrades Included

Overloaded Facility	Rating	Summer		Spring	
		Pre	Post	Pre	Post
Kramer-Lugo No.1 230 kV T/L	494 MVA 1240 Amps	85.4%	**106.5%**	97.2%	**118.7%**
Kramer-Lugo No.2 230 kV T/L	494 MVA 1240 Amps	85.4%	**106.5%**	97.2%	**118.7%**

Figure 2-1
Summer Power Flow Plot
Pre-Project with Reliability Upgrades for Queued Ahead Projects Modeled

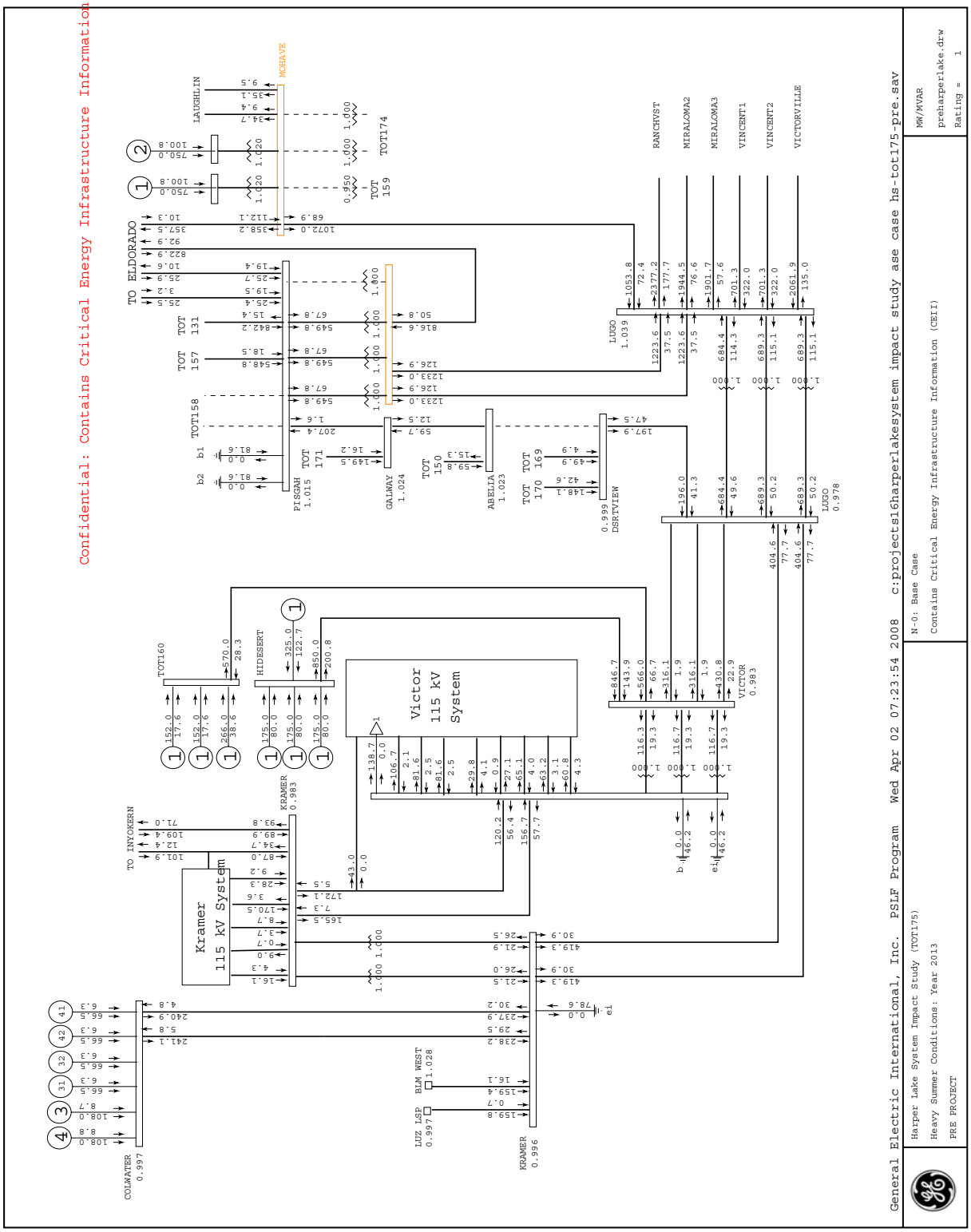

Figure 2-2
Summer Power Flow Plot
Post-Project with Reliability Upgrades for Queued Ahead Projects Modeled

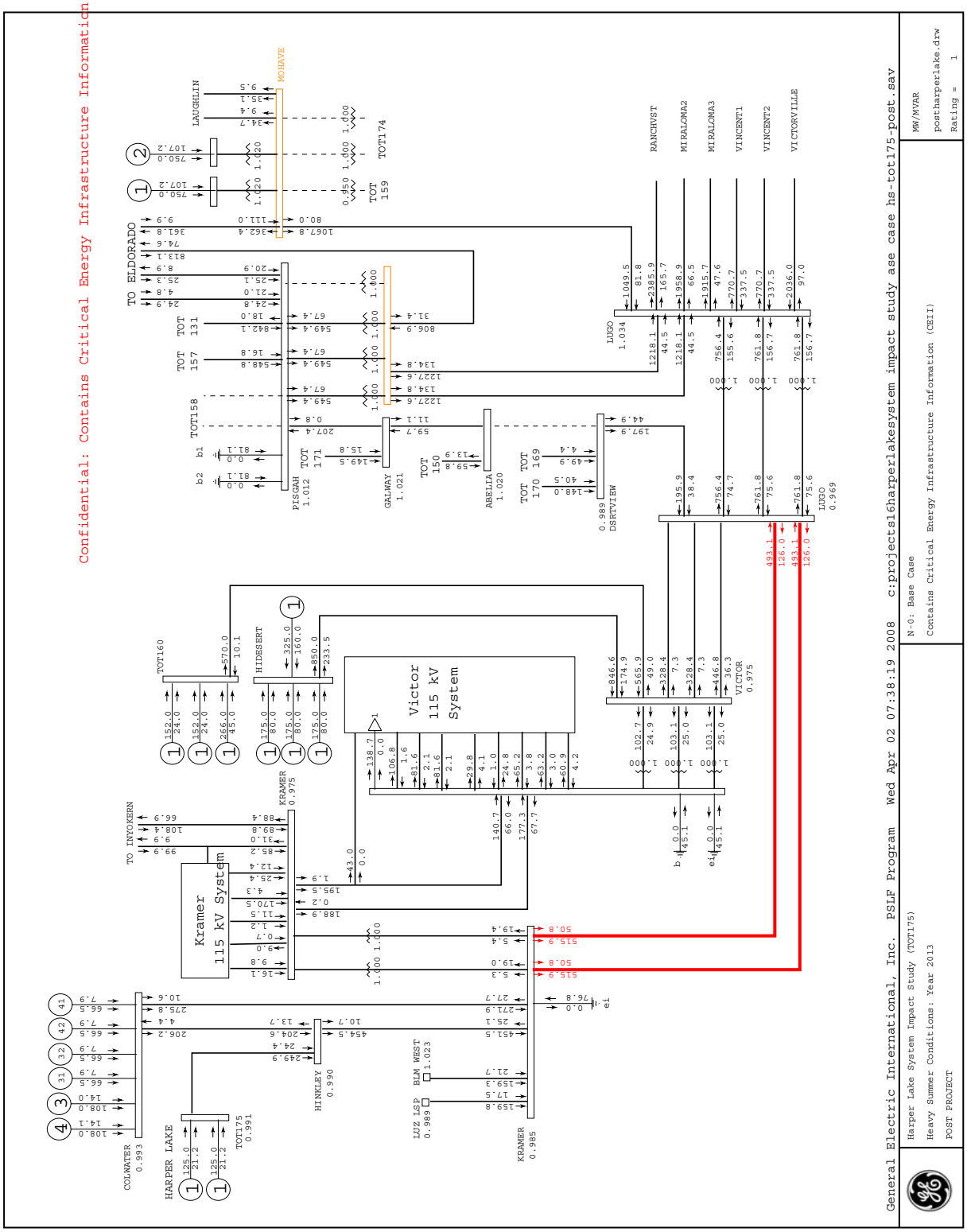

Figure 2-3
Spring Power Flow Plot
Pre-Project with Reliability Upgrades for Queued Ahead Projects Modeled

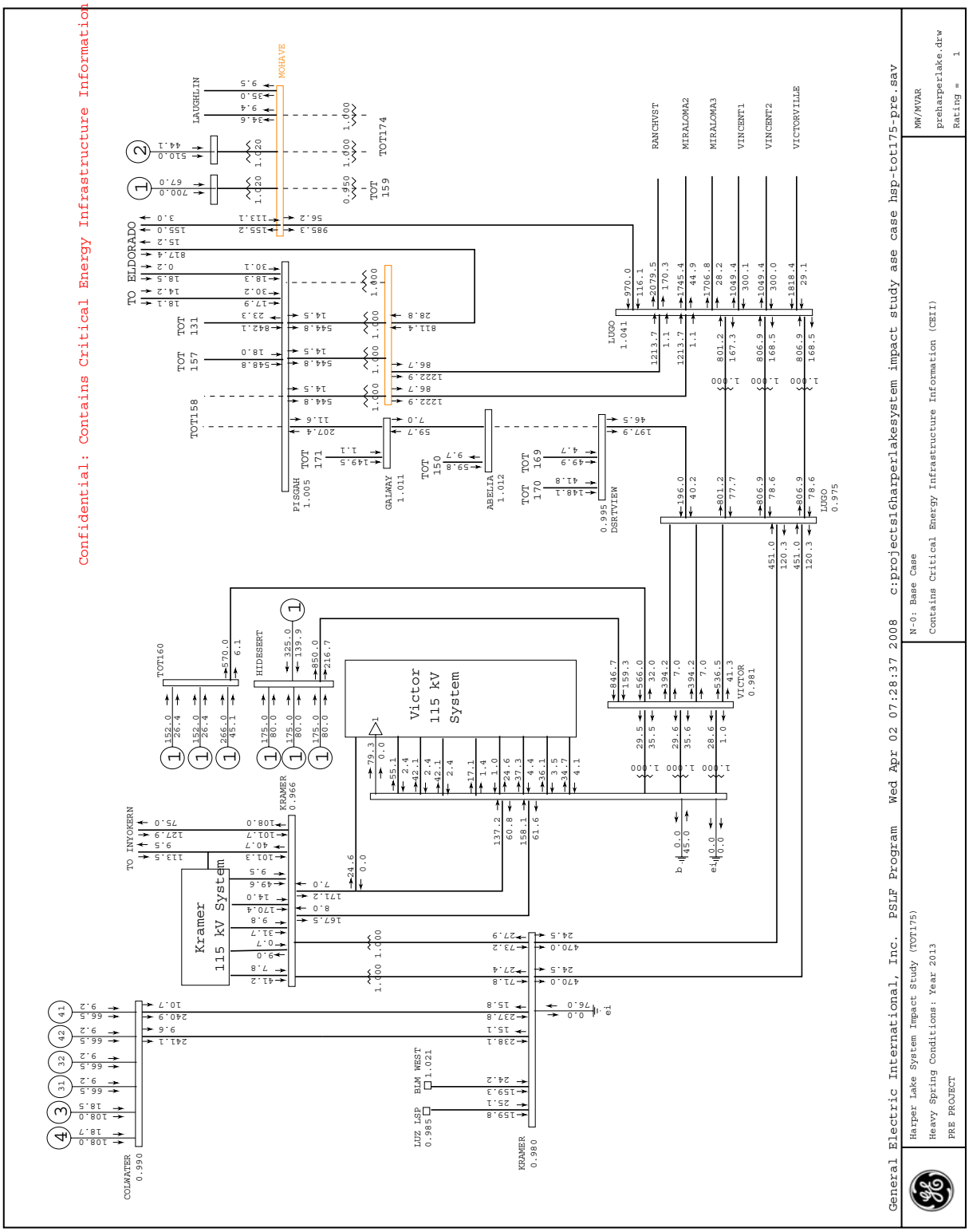

Figure 2-4
Spring Power Flow Plot
Post-Project with All Upgrades for Queued Ahead Projects Modeled

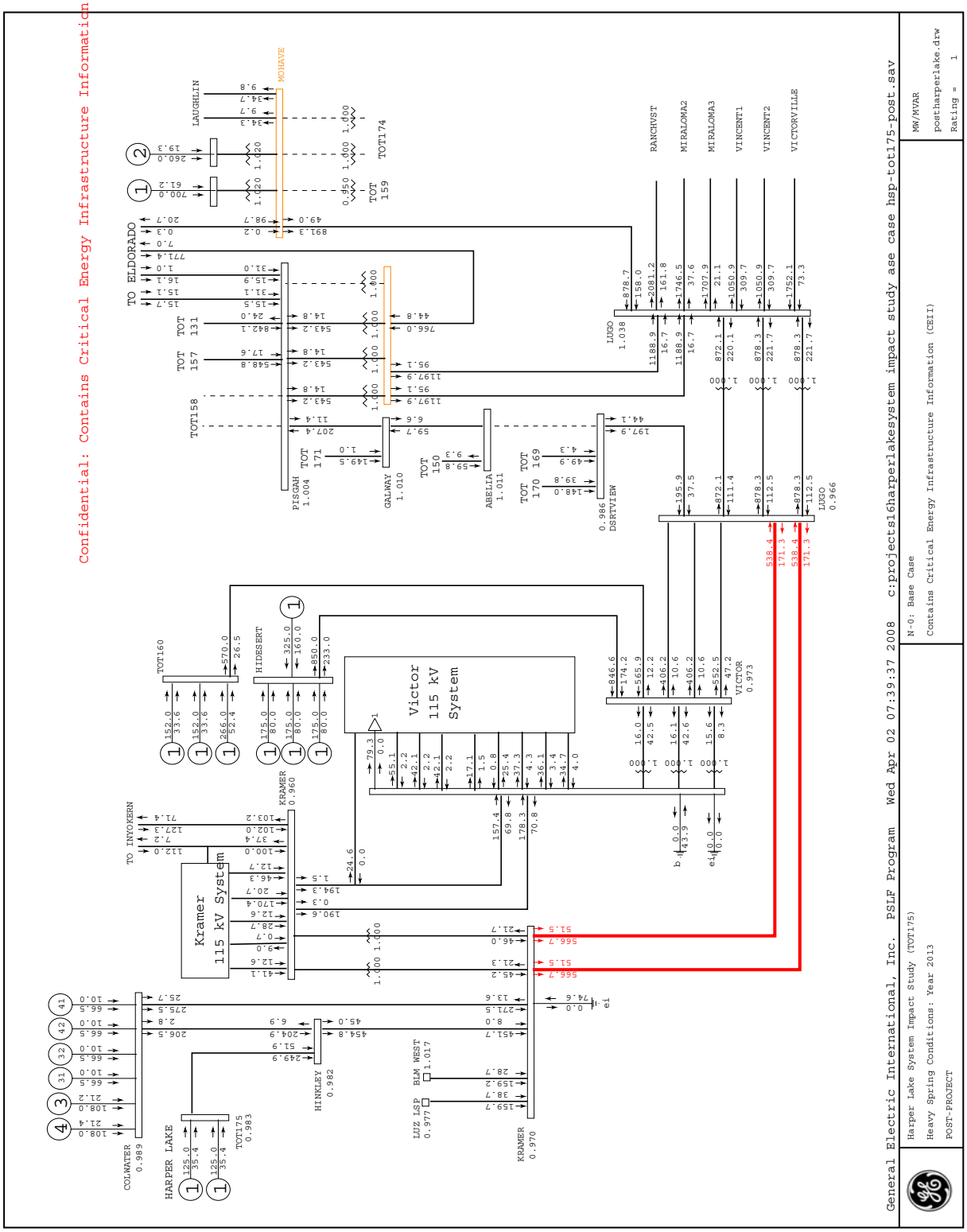

Based on these study results, the addition of the transmission upgrades needed to mitigate all prior queued overloads does not provide sufficient transmission capability south of Kramer to accommodate the addition of the HLSP Project. Therefore, the addition of the HLSP Project ***triggers the need for additional South of Kramer transmission capability*** under both summer and spring load conditions. Because pre-project loadings under spring load conditions are already near their maximum level, the full HLSP Project could be subject to potential congestion management if additional upgrades, beyond those identified to mitigate the pre-project overloads, are not implemented.

To mitigate the identified base case overload without implementing congestion management, additional transmission would be required to support increased south of Kramer flows. This additional transmission can be accomplished by one of the following two methods:

- Constructing a new double-circuit 230 kV transmission line with one initial circuit between Kramer and Lugo **or**

- Constructing a new double-circuit 230 kV transmission line with one initial circuit between the existing Cool Water 230 kV Substation and the new Desert View 230 kV Substation[9].

Housing development in the Victorville and Lugo Substation (City of Hesperia) surrounding areas will make the first alternative extremely difficult to locate along existing right-of-way and terminate into the Lugo Substation. The second alternative will increase system reliability due to the added geographic diversity (different corridor) and avoid the possibility of adverse impacts to residential and commercial development. In addition, the second alternative is estimated to require approximately 37 miles of new right-of-way, whereas the first alternative is estimated to require approximately 48 miles of new right-of-way. Lastly, the second alternative addresses the need for additional transmission for renewable resources queued behind the HLSP Project that are located in the Cool Water Substation area.

The second alternative is the best option to pursue because it provides a transmission solution that addresses the generation needs in the area, avoids short-lived "piece-meal" solutions, minimizes environmental impacts, minimizes the overall cost exposure to rate-payers, minimizes service interruptions, minimizes the need for generation curtailments while upgrades are implemented, improves overall system reliability and provides the minimum set of facilities for the HLSP Project, thus minimizing upfront cost responsibility. Base case power flow plots with the inclusion of the second alternative are illustrated in Figure 2-5 and Figure 2-6 for summer and spring load conditions respectively.

[9] Upgrade to the Lugo-Desert View 230 kV transmission line with 500 kV design construction standard, but initially energized at 230 kV, was assumed to be undertaken as part of the Lugo-Pisgah 500 kV upgrade triggered by a queued ahead generation project.

Figure 2-5
Summer Power Flow Plot
Post-Project with Additional Transmission Modeled to Increase South of Kramer

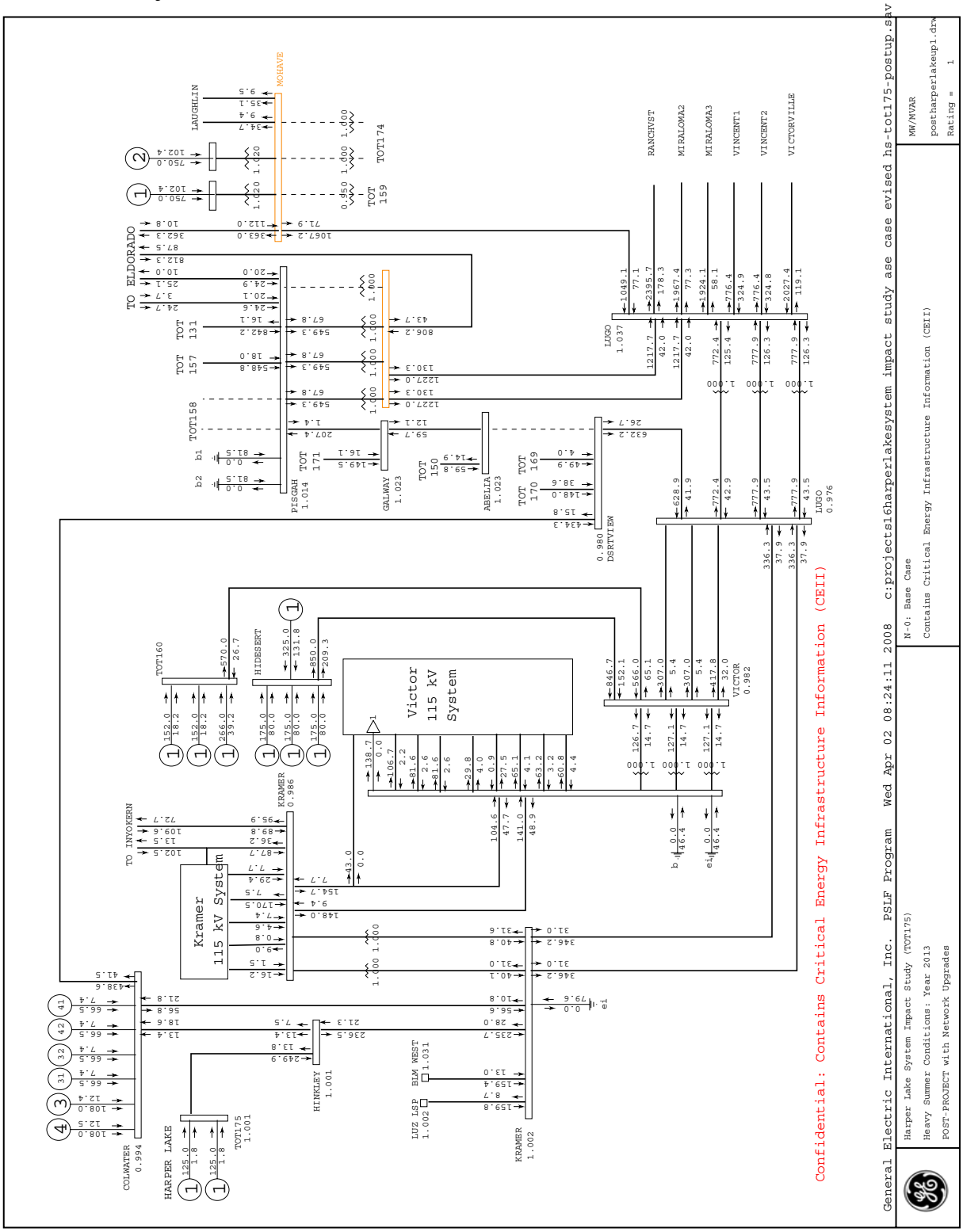

Figure 2-6
Spring Power Flow Plot
Post-Project with Additional Transmission Modeled to Increase South of Kramer

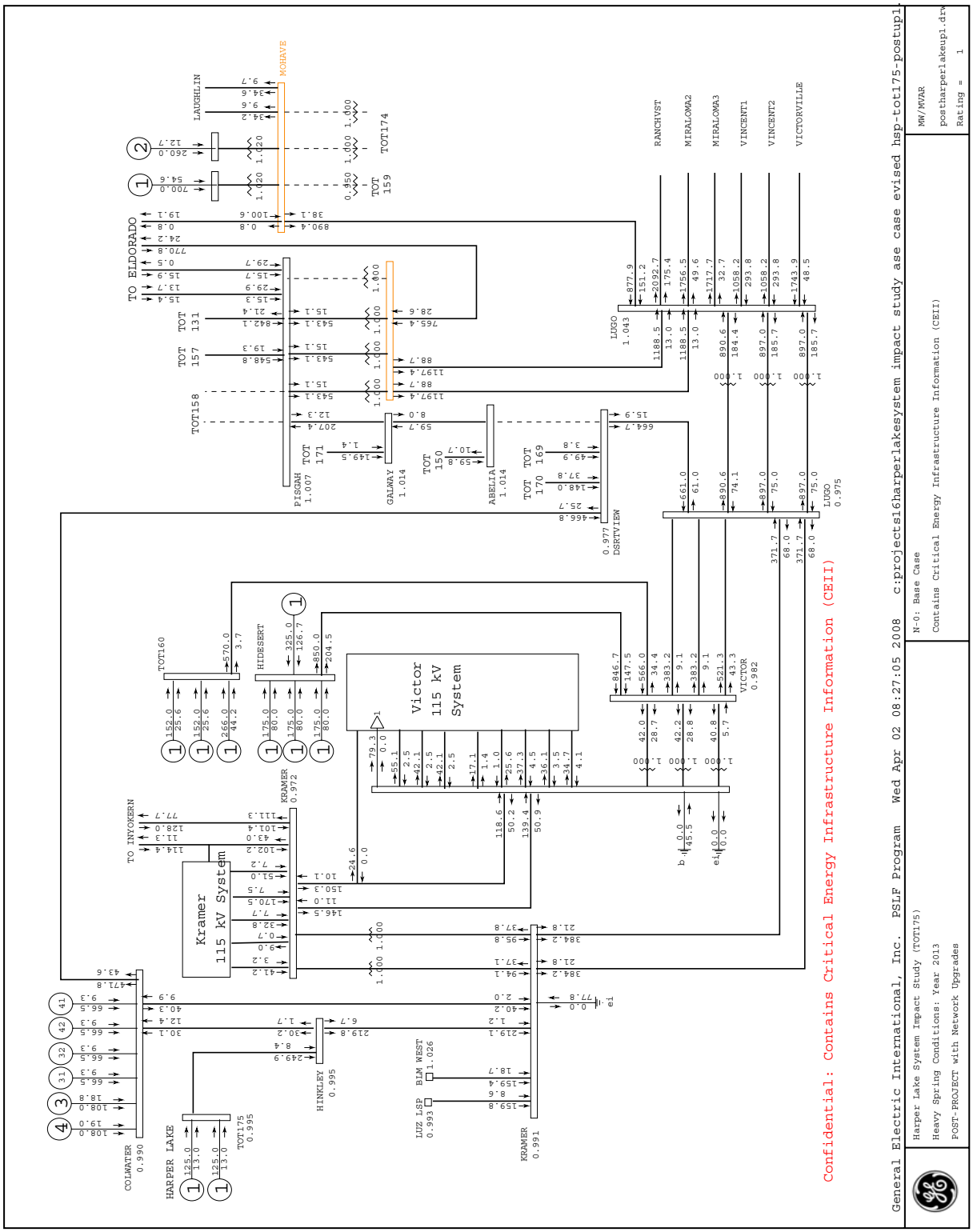

Single Contingency Outage Conditions (N-1)

As discussed above in Section II.E, the existing system already has an SPS in place which arms local Kramer area generation and trips under the specific transmission line outages shown below in Table 2-2.

Table 2-2
Existing Kramer SPS and Arming Thresholds

	South of Kramer Flow Arming Level	Amount of Generation Armed
Lugo-Kramer No.1 **or** No.2 230 kV transmission line	650 – 950 MW	Up to 480 MW
Lugo-Kramer No.1 **and** No.2 230 kV transmission lines	250 – 950 MW	Up to 810 MW

Because the addition of the HLSP Project results in increasing flows on these transmission facilities and the existing SPS are in place to maintain system reliability, the HLSP Project will need to participate in the Kramer SPS (loss of Lugo-Kramer No.1 or No.2 transmission lines) if additional transmission upgrades beyond those identified to mitigate the pre-project overloads are not implemented.

In addition to the transmission line outages above, the existing system also has in place two SPSs which arm and trip local Kramer and Victor area generation under the loss of one or both existing Lugo 500/230 kV transformer banks as shown below in Table 2-3.

Table 2-3
Existing HDPP and Kramer SPS Lugo AA-Bank Arming Thresholds

	Lugo AA-Bank Flow Arming Level	Amount of Generation Armed
Lugo No.1 **or** No.2 500/230 kV transformer bank	650 – 950 MW	Up to 480 MW
Lugo No.1 **and** No.2 500/230 kV transformer banks	1250 – 2050 MW	Up to 1,660 MW

Because a third transformer bank is proposed to be added to support a queued ahead generation project, the installation of the third transformer bank will provide for an additional 1120 MVA capability under base case conditions and 1230 MVA under a single bank outage contingency. The total MW additions, up to and including the HLSP Project, is 1,020 MW, which is less than the added capability of the third transformer bank. Consequently, continued reliance on the existing HDPP SPS and Kramer SPS to trip existing generation units which are currently participating in each SPS is recommended.

With the additional upgrades identified for mitigating the HLSP Project triggered base case thermal overloads, the study identified two single contingency outages which would require the need for the HLSP Project to participate in a new SPS. Under the loss of the Lugo-Desert View 230 kV transmission line, the generation that was connected in a radial manner to the

Desert View Substation (CAISO #114 and CAISO #116) would be transmitted north to the Cool Water Substation, where it would then head west to the Kramer Substation, and ultimately together with the HLSP Project, head south to the Lugo Substation overloading the Kramer-Lugo No.1 and No.2 230 kV transmission lines. Under the loss of the Cool Water-Desert View 230 kV transmission line, the generation of the HLSP Project would be transmitted south to Lugo overloading the existing Kramer-Lugo No.1 and No.2 230 kV transmission lines. Results of this outage are summarized below in Table 2-4, and illustrated in Figure 2-7 through Figure 2-10.

Table 2-4
Single Contingency Overload
All Prior Triggered Upgrades and HLSP Project Upgrades Included

Overloaded Facility	Rating	Summer		Spring	
		Pre	Post	Pre	Post
Kramer-Lugo No.1 and No.2 230 kV T/Ls Loss of Cool Water-Desert View 230 kV	1240 Amps (N) 1425 Amps (E)	N/A	106.5% 92.3%	N/A	118.7% 102.9%
Kramer-Lugo No.1 and No.2 230 kV T/Ls Loss of Lugo-Desert View 230 kV	1240 Amps (N) 1425 Amps (E)	N/A	124.0% 107.4%	N/A	136.4% 118.3%

Figure 2-7
Summer Power Flow Plot
Post-Project with Additional Upgrades for the HLSP Project Modeled
(Loss of Cool Water-Desert View 230 kV T/L)

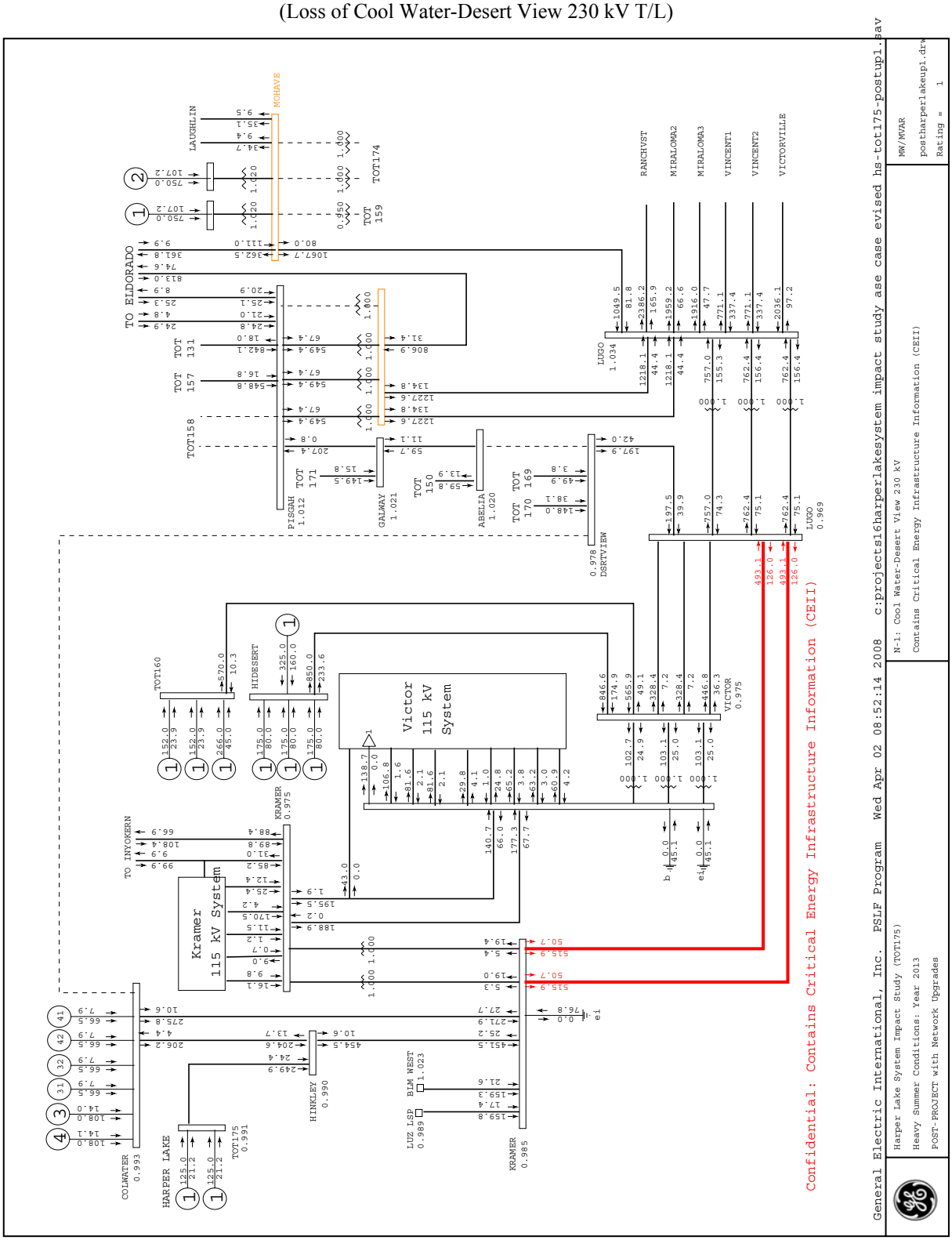

Figure 2-8
Spring Power Flow Plot
Post-Project with Additional Upgrades for the HLSP Project Modeled
(Loss of Cool Water-Desert View 230 kV T/L)

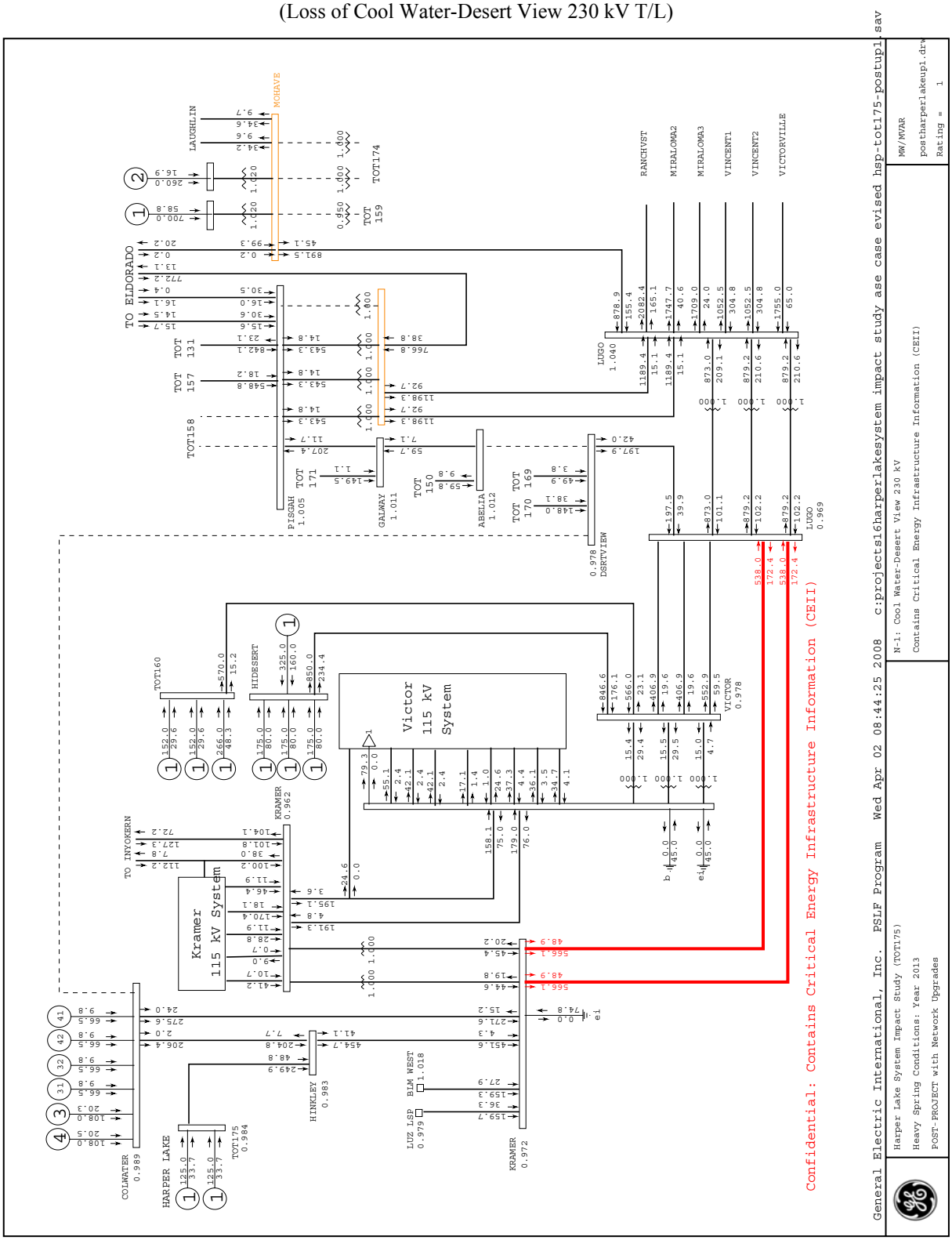

Figure 2-9
Summer Power Flow Plot
Post-Project with Additional Upgrades for the HLSP Project Modeled
(Loss of Lugo-Desert View 230 kV T/L)

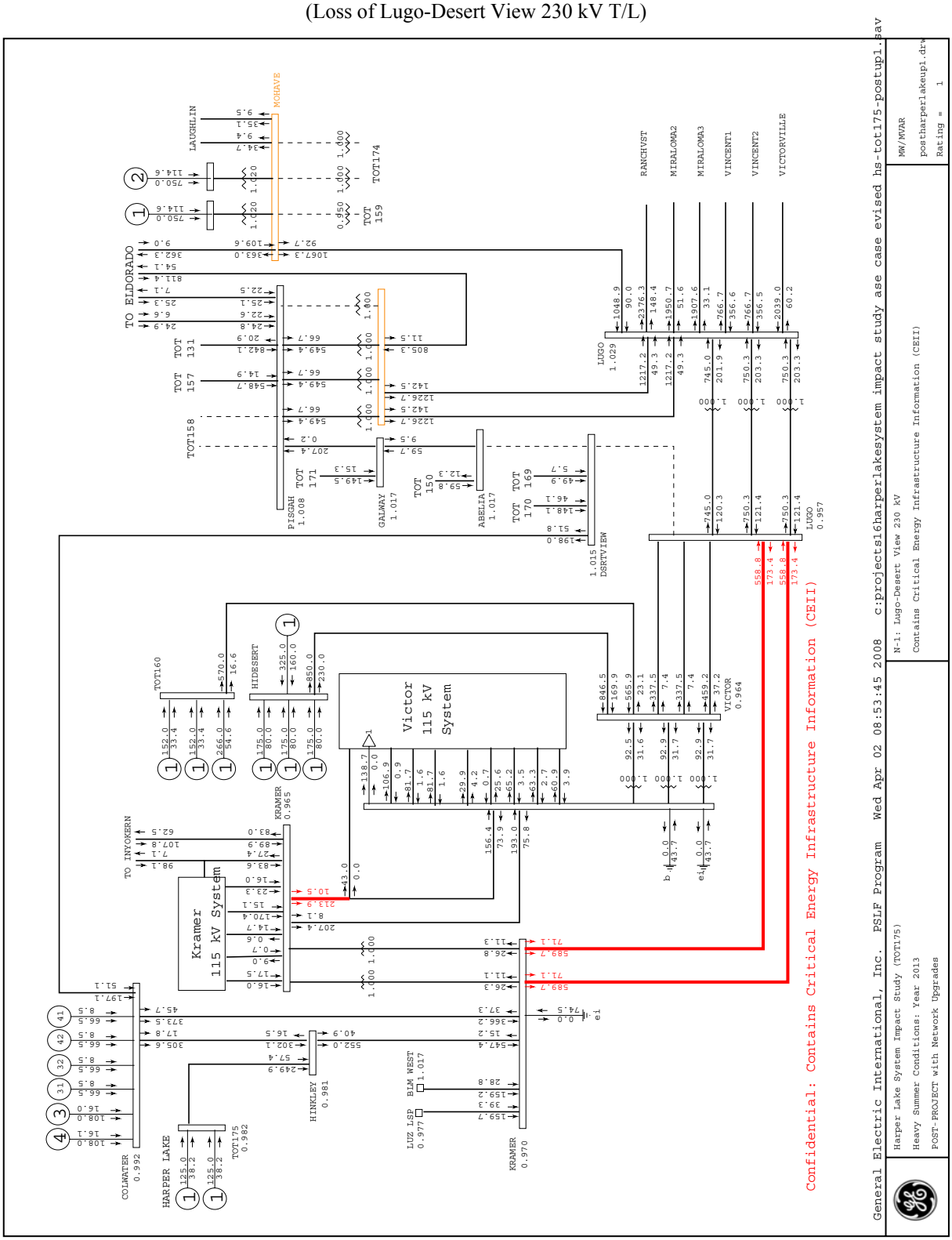

Figure 2-10
Spring Power Flow Plot
Post-Project with Additional Upgrades for the HLSP Project Modeled
(Loss of Lugo-Desert View 230 kV T/L)

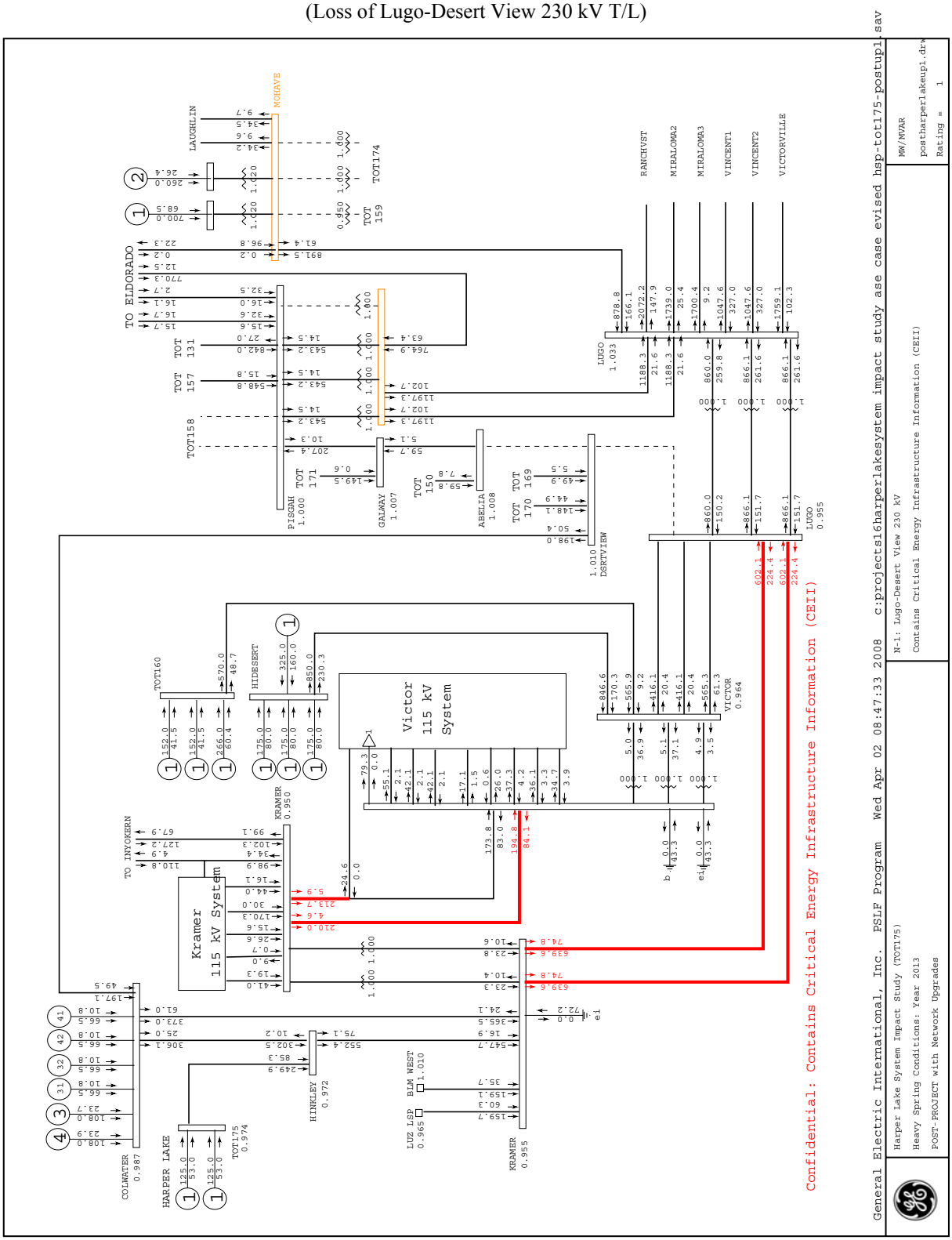

The following two mitigation alternatives are feasible to mitigate the thermal overload identified under the loss of the Cool Water-Desert View 230 kV transmission line:

- Install the second circuit on the double-circuit 230 kV transmission line between Cool Water and the new Desert View Substations.
- Implement an SPS to trip one of the two generation units at the HLSP.

An SPS is recommended to mitigate the thermal overload identified under outage of the Lugo-Desert View 230 kV transmission line. The SPS would need to transfer trip the generation tie-line circuit breakers connecting the two generation projects at Desert View, as well as trip one of the two generation units at the HLSP.

It should be noted that transfer tripping the two generation projects connecting to the Desert View Substation would not result in increasing outage exposure to these two projects because under the pre-project upgrade condition, these two projects would be tripped for the same outage, since they would be disconnected from the source (Lugo Substation) without a second source line.

Local Area Outage Conditions (N-2)

Similar to the discussion for single outage conditions, the HLSP Project will need to participate in the Kramer SPS (loss of both Lugo-Kramer No.1 and No.2 transmission lines) if additional transmission upgrades beyond those identified to mitigate the pre-project overloads are not implemented. With the additional upgrades identified for mitigating the HLSP Project triggered base case thermal overloads, the study did not identify any additional N-2 thermal overload problems.

System Wide Double Contingency Outage Conditions (N-2)

In addition to the local area double outage conditions identified above, the study determined that the total amount of Lugo Area generation export (through South of Lugo and Lugo-Vincent 500 kV transmission lines) is limited to approximately 7,800 MW. With the addition of more generation resources in the North and East of Lugo areas, the amount of excess generation requiring export will eventually exceed 7,800 MW. Consequently, additional transmission capacity will be required if the total amount of area export is to be increased. However, such requirement is not triggered solely by the addition of the HLSP Project. Therefore, this facility upgrade will be evaluated and recommended as part of a larger study effort in the area (either through the RETI study process or the annual CAISO Transmission Expansion Planning Process).

B. Transient Stability Analysis

Transient stability studies were performed for the outages specified in Table 1-9. The HLSP Project was found to satisfy the low-voltage ride-through requirements, but will need to participate in the Kramer SPS (loss of one or both Lugo-Kramer No.1 and No.2 transmission lines) if additional transmission upgrades beyond those identified to mitigate the pre-project overloads are not implemented.

With the additional upgrades identified for mitigating the base case thermal overloads triggered by the HLSP Project, the study identified transient stability problems under the following outage conditions:

- Single outage of the Lugo-Desert View 230 kV transmission line.
- Double outage of the Kramer-Lugo No.1 and No.2 230 kV transmission lines.

The study determined that with the addition of the Cool Water-Desert View 230 kV transmission line, the HLSP Project will not need to participate in the existing Kramer SPS for a double outage of the Kramer-Lugo No.1 and No.2 230 kV transmission lines. However, the study identified that the tripping requirements for mitigating transient stability problems under a single outage of the Lugo-Desert View 230 kV transmission line are more stringent than the tripping requirements for mitigating thermal overloads. Under this outage, the SPS should include tripping of the entire HLSP. Transient stability plots for summer and spring load conditions are provided in Appendix A and Appendix B respectively.

C. Post-Transient Stability Analysis

As discussed in the power flow section of the report, the addition of the HLSP Project did not trigger any new post-transient voltage criteria violations. However, the study determined that without the facility upgrades identified under base case conditions, the HLSP Project aggravates previously identified voltage problems, including case non-convergence, which are indicative of a potential voltage collapse condition.

These voltage problems are found to be mitigated with the implementation of the pre-project transmission upgrades identified for queued ahead generation projects.

D. Short Circuit Duty Study

The short-circuit duty analysis included all the queued ahead generation projects based on their application date, including the corresponding transmission upgrades identified to date. The short-circuit duty study results shown below in Table 2-5 and Table 2-6 present the impact attributed to the addition of the HLSP Project, while the results shown below in Table 2-7 and Table 2-8 present the incremental impact attributed to the addition of the upgrades identified to be triggered by the HLSP Project.

Table 2-5
Three Phase (3PH)
Short Circuit Duty Study Results
Addition of the HLSP Project Only

		Pre-Project		Post-Project		DELTA
Bus Name	Bus KV	X/R	KA	X/R	KA	KA
LUGO	500	23.0	51.5	22.9	51.6	0.1
MIRA LOMA	500	24.0	39.8	23.9	39.9	0.1
SERRANO	500	24.4	33.6	24.4	33.7	0.1
WHIRLWIND	500	17.3	29.8	17.3	29.9	0.1
CHINO	230	16.7	50.5	16.7	50.6	0.1
HINKLEY	230	15.3	9.2	20.6	12.7	3.5
KRAMER	230	14.7	16.2	15.8	18.3	2.1
LUGO	230	37.7	49.0	36.7	49.4	0.4
MIRALOMA (W)	230	19.7	53.0	19.7	53.1	0.1
SYLMAR S	230	19.1	59.5	19.1	59.6	0.1
VICTOR	230	19.0	33.6	18.8	33.8	0.2
INYOKERN	115	3.7	7.3	3.7	7.4	0.1
KRAMER	115	10.9	23.4	11.4	24.1	0.7
VICTOR	115	20.0	24.5	19.9	24.6	0.1

Table 2-6
Single Line to Ground (SLG)
Short Circuit Duty Study Results
Addition of the HLSP Project Only

		Pre-Project		Post-Project		DELTA
Bus Name	Bus KV	X/R	KA	X/R	KA	KA
LUGO	500	12.9	42.7	12.9	42.8	0.1
ETIWANDA	230	17.5	57.8	17.5	57.9	0.1
KRAMER	230	10.9	13.4	10.9	15.5	2.1
LUGO	230	25.0	51.1	24.7	51.4	0.3
MIRA LOMA (W)	230	11.6	63.9	11.6	64.0	0.1
VICTOR	230	12.7	30.6	12.6	30.7	0.1
VICTOR	115	20.4	28.8	20.4	28.9	0.1

As can be seen, the three-phase-to-ground short-circuit duty study with only the HLSP Project identified four 500 kV, seven 230 kV, and three 115 kV substation locations requiring engineering review. The single-line-to-ground short-circuit duty study identified one 500 kV, five 230 kV and one 115 kV substations requiring engineering review. Detailed review of these substation locations will be performed as part of the Facilities Study for determination of breaker replacement need.

Table 2-7
Three Phase (3PH) Short Circuit Duty Study Results
Addition of Upgrades Triggered by the HLSP Project

		Pre-Upgrades		Post-Upgrades		DELTA
Bus Name	Bus KV	X/R	KA	X/R	KA	KA
ANTELOPE	500	21.2	32.6	21.2	32.7	0.1
ELDORADO	500	18.9	47.4	19.0	47.5	0.1
LUGO	500	22.9	51.6	23.4	52.3	0.7
MIRA LOMA	500	23.9	39.9	24.1	40.0	0.1
PISGAH	500	20.3	23.4	20.4	23.5	0.1
RANCHO VISTA	500	28.6	28.1	28.8	28.2	0.1
VINCENT	500	18.8	45.0	18.9	45.2	0.2
ANTELOPE	230	24.7	36.0	24.7	36.1	0.1
COOL WATER	230	30.1	11.5	28.4	17.0	5.5
DESERT VIEW	230	6.1	8.7	26.7	16.7	8
ETIWANDA	230	25.8	59.7	25.9	59.8	0.1
HINKLEY	230	20.6	12.7	19.6	13.4	0.7
KRAMER	230	15.8	18.3	15.6	18.9	0.6
LEWIS	230	21.5	46.0	21.6	46.1	0.1
LUGO	230	36.7	49.4	38.6	51.9	2.5
MIRA LOMA(E)	230	23.2	65.3	23.3	65.4	0.1
PARDEE	230	16.3	57.3	16.3	57.4	0.1
RANCHO VISTA	230	26.2	60.9	26.3	61.0	0.1
SAN BERNARDINO	230	21.5	40.1	21.5	40.2	0.1
VICTOR	230	18.8	33.8	18.5	34.5	0.7
VINCENT	230	24.1	60.9	24.1	61.0	0.1
VISTA	230	18.7	48.3	18.7	48.4	0.1
KRAMER	115	11.4	24.1	11.5	24.2	0.1
VICTOR	115	19.9	24.6	19.9	24.7	0.1

Table 2-8
Single Line to Ground (SLG) Short Circuit Duty Study Results
Addition of Upgrades Triggered by the HLSP Project

		Pre-Project		Post-Project		DELTA
Bus Name	Bus KV	X/R	KA	X/R	KA	KA
LUGO	500	12.9	42.8	13.0	43.1	0.3
MIRA LOMA	500	10.8	36.6	10.9	36.7	0.1
PISGAH	500	21.7	21.8	21.6	21.9	0.1
RANCHO VISTA	500	8.3	25.4	8.3	25.5	0.1
CHINO	230	12.5	40.6	12.5	40.7	0.1
COOL WATER	230	30.7	12.4	29.8	16.7	4.3
KRAMER	230	10.9	15.5	10.7	15.7	0.2
LUGO	230	24.7	51.4	25.1	53.5	2.1
MIRA LOMA (W)	230	13.3	56.9	13.4	57.0	0.1
PISGAH	230	29.8	44.4	29.8	44.5	0.1
RANCHO VISTA	230	16.4	61.5	16.5	61.6	0.1
VICTOR	230	12.6	30.7	12.5	31.1	0.4
VILLA PARK	230	15.8	44.3	15.8	44.4	0.1
VICTOR	115	20.4	28.9	20.4	29.0	0.1

As can be seen, the addition of the facility upgrades required to support the HLSP Project further increases three-phase-to-ground short-circuit duty at seven 500 kV, fifteen 230 kV, and two 115 kV substation locations requiring engineering review. The addition of the facility upgrades required to support the HLSP Project was found to further increase single-line-to-ground short-circuit duty at four 500 kV, nine 230 kV and one 115 kV substation locations requiring engineering review. Detailed review of these substation locations will be performed as part of the Facilities Study for determination of breaker replacement need.

As part of the System Impact Study, the substation locations identified without the facility upgrades required to support the HLSP Project were reviewed to determine the need for circuit breaker replacement, and to determine if the need was triggered by the HLSP Project. Based on the engineering review, the addition of the HLSP Project triggers the need for circuit breaker replacement at the Kramer Substation. Table 2-9 summarizes the results of the engineering review.

Table 2-9
Engineering Review of Circuit Breakers

Bus Name	Bus KV	Replace	Upgrade	Cost Allocation
KRAMER	230	5	0	Case A
LUGO	500	0	3	Case B
ETIWANDA	230	24	0	Case B
LAGUNA BELL	230	2	14	Case B
LUGO	230	3	2	Case B
PISGAH	230	12	0	Case B
INYOKERN	115	2	0	Case B
VICTOR	115	2	0	Case B

It should be noted that additional need for breaker replacements may be identified when considering the transmission upgrades identified to mitigate the HLSP Project triggered base case overloads. Consequently, the cost estimates provided in this report are for informational purposes only, as detailed review of substations identified in Table 2-7 and Table 2-8 will be performed as part of the Facilities Study.

E. Deliverability Assessment

Separate studies entitled "Deliverability Assessments" were performed by the CAISO, which determined that the HLSP Project is not deemed as deliverable to the grid for Resource Adequacy (RA) purposes. The modeling assumptions for the Deliverability Assessment are slightly different from the modeling assumptions in this ISIS. For details regarding the methodology and assumptions for performing the Deliverability Assessment, refer to the Baseline Generation Deliverability Study – 2007 Q3 Study Plan posted at: http://www.caiso.com/1c5d/1c5ddc8a63cd0.pdf.

In particular, the 2007 Q3 Deliverability Assessment modeled the following upgrades:

- Lugo 500/230 kV No.3 Transformer Bank (AA-Bank)

- Kramer-Lugo No. 3 230 kV Transmission Line[10]
- Victor-Lugo No.3 230 kV Transmission Line
- Replacement of the Lugo-Pisgah No.2 230 kV with a new 500 kV Transmission Line
- Operation of the remaining Lugo-Pisgah 230 kV line as two radial lines
    - Radial into Lugo connecting the new Desert View Substation
    - Radial into Pisgah connecting the new Abelia and new Galway Substations

The study did not include the new Cool Water-Desert View 230 kV transmission line(s) recommended in this study to mitigate the identified base case thermal overloads on the two Kramer-Lugo 230 kV transmission lines.

V. COST ESTIMATES

The cost estimates of facility upgrades that have been identified to mitigate planning criteria violations triggered by queued ahead projects, or by the addition of the HLSP Project, are provided below in Table 2-10. ***All cost estimates are rough, order of magnitude estimates and are non-binding.*** The *Nonbinding* Cost Estimate for the HLSP Project Facilities is $131.7 million in 2010 dollars (the ITCC component will be collected via a Letter of Credit). The *Nonbinding* Cost Estimate for upgrades triggered by queued ahead projects is $257.0 million, also in 2010 dollars.

[10] SPS was not modeled due to unknown specifications. With SPS and the additional Kramer-Lugo No.3 Transmission Line, the HLSP Project would be deemed deliverable.

Table 2-10
Cost Estimates[11] Provided in Millions

Facility Upgrade	Triggered by Queued Ahead Project[12] (CASE B)	Triggered by the HLSP Project (CASE A)
Install 3rd Lugo 500/230 kV Transformer Bank	$57.0	-
New Lugo-Victor No.3 230 kV Transmission Line including: • 10-12 mile 230 kV line • Lugo and Victor Substation work to support new line • 115 kV line rearrangements to make room in existing right-of-way	$37.2	-
New 37-mile (approximate) Cool Water-Desert View double-circuit 230 kV Transmission Line (2B-1590 ACSR) with one initial circuit	-	$110.0[13]
Equip one double-breaker 230 kV positions at Cool Water	-	$3.3
New Desert View Substation (breaker-and-a-half) sized for ultimate four 500/230 kV transformers initially equipped as follows: • Initial 4-bay position equipping two with 5 CBs • Two other positions equipped with four CBs for gen-ties, but cost not included in this estimate (direct assign costs to specific queued ahead projects) • Second 4-bay position equipping one with two CBs (triggered by HLSP)	$10.0	$4.7
Remove existing Lugo-Pisgah No.1 and No.2 230 kV transmission line sections between Lugo and Desert View	$15.5[14]	-
New 16-mile double-circuit 500 kV transmission line	$105.2	$0.0[15]
New Hinkley 230 kV Substation 4-bay (breaker-and-a-half) with two positions initially equipped with five CBs	-	$10.0
Circuit Breaker Upgrades: • Lugo 500 kV (3) • Laguna Bell 230 kV (14) and Lugo 230 kV (2)	$3.7	-
Circuit Breaker Replacements identified in Feasibility Study: • Etiwanda 230 kV (24) and Mira Loma 230 kV (12)[16] • Kramer 230 kV (5) • Laguna Bell 230 kV (2) and Lugo 230 kV (3) • Inyokern 115 kV (2) and Victor 115 kV (2)	$28.4	$2.7
Protection, Telecom, and Special Protection System	-	$1.0
Total	$257.0	$131.7[17]

[11] Shown in 2010 Year Dollars and does not include any ITCC Tax.
[12] Cost of such additional facilities may later be assigned to the HLSP Project if modifications to queued ahead projects (consistent with LGIP) or project withdrawals result in the HLSP Project triggering the need for the upgrade (as determined by a restudy).
[13] Estimate does not include the costs associated with right-of-way acquisition or cost associated with telecommunications. Installation of second circuit estimated at $28.5 million.
[14] Cost estimates assume alternative selected for queued ahead project result in construction of double-circuit 500 kV along existing right-of-way. If a different right-of-way is selected for queued ahead project, the $15.5 million removal cost shown as triggered by queued ahead project will become the responsibility of HLSP.
[15] Estimates are based on the same assumptions discussed in footnote 8. If a different route is selected, the Case B cost would be zero, and Case A cost would increase to $80 million to reflect a new single-circuit 500 kV transmission line.
[16] Excludes costs associated with station conversion from 63 kA to 80 kA.
[17] Facility classification, interconnection or reliability, will be done as part of the Facilities Study.

VI. ESTIMATED PROJECT TIMELINES

A significant amount of transmission facilities are necessary to mitigate pre-project base case overloads, and single contingency and double contingency outage thermal overload problems, which are aggravated with the addition of the HLSP Project. These transmission upgrades require detailed environmental assessments sufficient to support filing for a Certificate of Public Convenience and Necessity (CPCN) at the California Public Utilities Commission (CPUC). As a result, the following timelines are SCE's best judgment based on past permitting requirements. Such timelines should be viewed as ***nonbinding estimates*** and are not meant to imply that a CPCN will be issued by the appropriate permitting agencies.

a). The time required for the preparation of the Environmental Impact Statement and/or Environmental Impact Report, as required per CEQA and NEPA, is estimated at 18-24 months once a complete project scope is defined.

b). The time required for review and approval by CPUC and other permitting agencies is estimated to range between 12-24 months once the application submittal is deemed complete by the permitting agencies.

c). The time required to complete final engineering, material procurement and construction of the proposed scope of work is estimated to range between 18 and 24 months after obtaining project authorization and funding, receiving all necessary approvals and permits from the CPUC, and obtaining all other required regulatory agency approvals.

These activities are typically sequential in nature, and therefore, the overall timeline requirements range from 48 months to 72 months once a complete project scope is defined and preliminary engineering is complete. The complete project scope definition is typically done as part of the Interconnection Facilities Study, but can be advanced, subject to the availability of SCE available resources, under an Engineering and Design Letter Agreement. SCE will evaluate resource availability at the time a request for a Letter Agreement is made. It's also important to note that SCE cannot guarantee complete project scope definition under such Letter Agreements because the Facilities Studies may identify other issues that may not be known at the time a Letter Agreement is executed. However, these conditions are typically not the norm, and the work done in advance can help advance the project CPCN filing date.

VII. CONCLUSIONS

To interconnect the HLSP Project in a manner that addresses the generation needs in the area, avoids short-lived "piece-meal" solutions, minimizes environmental impacts, minimizes overall cost exposure to rate-payers, minimizes service interruptions, minimizes the need for generation curtailments while upgrades are implemented, and provides the minimum set of facilities for the HLSP Project, thus minimizing upfront cost responsibility, the following upgrades are required:

1. Construction of a new breaker-and-a-half 230 kV Substation (Hinkley Substation) with a four bay position switchrack,[18] equipping only two positions with a total of five circuit breakers.

2. Installation of appropriate fully redundant and diverse telecommunication facilities to provide overall system protection.

Based on the study results, the existing SCE transmission facilities, with only the above minimum set of facility upgrades required to interconnect the HLSP Project, are not adequate to accommodate the HLSP Project, when considering all other generation projects queued ahead.

Power Flow

Without implementing any of the transmission upgrades identified to be triggered by the queued ahead projects, the existing system does not have sufficient transmission capability to deliver the total output of all queued generation projects, up to, and including, the HLSP Project. Severe problems were identified under both heavy summer and light spring load conditions that resulted in a base case which would not solve, due to voltage levels in the Lugo Area that would be well below acceptable limits. Consequently, a number of upgrades will be necessary to reliably interconnect and deliver the HLSP Project output as discussed below.

BASE CASE CONDITIONS

To mitigate problems triggered by queued ahead projects requesting interconnection along the Lugo-Pisgah corridor or to the Pisgah 230 kV Substation and along the Lugo-Victor-Kramer-Control corridor, the following transmission upgrades previously identified to be triggered by such queued ahead projects were included in the initial studies:

- Expansion of the existing SCE Pisgah 230 kV Substation to include 500 kV facilities.
- Removal of the existing Lugo-Pisgah No. 2 230 kV transmission line and replacement with a new Lugo-Pisgah 500 kV transmission line.[19]
- Looping of the existing Eldorado-Lugo 500 kV transmission into the new 500 kV Pisgah Substation.
- Looping of the existing Lugo-Pisgah No. 1 230 kV transmission line into 3 new substations (Desert View, Abelia and Galway) forming new Lugo-Desert View 230 kV, Abelia-Desert View 230 kV (normally open), Abelia-Galway 230 kV, and Pisgah-Galway 230 kV transmission lines.
- Construction of a third Lugo-Victor 230 kV transmission line.

[18] Standard SCE bus structures provide for up to four bay positions, but only the required bays will be equipped as part of the HLSP Project.

[19] New right-of-way would be required west of the Mojave River to support a new 500 kV transmission line. A potential line routing alternative for this upgrade involves the use of existing right-of-way between the Mojave River and the Lugo Substation by removing both the existing Lugo-Pisgah No.1 and No.2 230 kV transmission lines and the construction of a new double-circuit 500 kV line. One of the new 500 kV circuits would be used to connect to Pisgah, and the other 500 kV circuit would be initially operated at 230 kV and connected to Desert View.

- Installation of the 3rd Lugo 500/230 kV transformer bank.

With the addition of the HLSP Project and all previously identified transmission upgrades, new base case overload problems were identified. Specifically, the HLSP Project triggers the following impacts:

Summer Load Conditions
Kramer-Lugo No.1 and No.2 230 kV Transmission Lines (85.4% → 106.5%)

Spring Load Conditions
Kramer-Lugo No.1 and No.2 230 kV Transmission Lines (97.2% → 118.7%)

To mitigate these base case overload problems, additional transmission will be required to increase the transfer capability south of Kramer. Such increase in transmission capability south of Kramer can best be provided by the

- Construction of a new Cool Water-Desert View double-circuit 230 kV transmission line with the installation of one initial circuit.

SINGLE OUTAGE CONTINGENCY (N-1)

Without the above additional facility upgrades in place to mitigate the identified base case overload problems, the study determined that the system is also inadequate to accommodate the full output of the HLSP Project under specific single outage contingencies. Because the HLSP Project results in increasing power flows on transmission facilities that are currently monitored as part of existing Kramer SPS (loss of Lugo-Kramer No.1 or No.2 230 kV transmission lines), the HLSP Project will need to be added to the existing Kramer SPS if the additional transmission upgrades identified to mitigate the base case overloads are not implemented. The addition of the HLSP Project to the Kramer SPS will increase the amount of generation participating in the Kramer SPS from 863 MW to 1,113 MW. The actual amount of generation armed and tripped under the outage condition will be determined by the amount of power flow on the two Kramer-Lugo 230 kV transmission lines prior to the outage.

With the base case facility upgrades in place, the study determined that an SPS will still be needed to mitigate thermal and transient stability problems under the loss of the Cool Water-Desert View and Lugo-Desert View 230 kV transmission lines. Outage of these lines results in loading the existing Kramer-Lugo No.1 and No.2 230 kV transmission lines as follows:

Overloaded Facility	Rating	Heavy Summer		Light Spring	
		Pre	Post	Pre	Post
Kramer-Lugo No.1 and No.2 230 kV T/Ls Loss of Cool Water-Desert View 230 kV T/L	1240 Amps (N) 1425 Amps (E)	N/A	106.5% 92.3%	N/A	118.7% 102.9%
Kramer-Lugo No.1 and No.2 230 kV T/Ls Loss of Lugo-Desert View 230 kV T/L	1240 Amps (N) 1425 Amps (E)	N/A	124.0% 107.4%	N/A	136.4% 118.3%

Under the loss of the Cool Water-Desert View 230 kV transmission line, the SPS should trip one of the HLSP generation units. Under the loss of the Lugo-Desert View 230 kV transmission line, the SPS should trip one of the HLSP generation units, as well as the generation projects directly connected to the Desert View Substation. Transfer tripping the generation projects directly connected to the Desert View Substation would not result in increasing the outage exposure of these projects, because the Desert View Substation is connected in a radial fashion prior to adding the Cool Water-Desert View 230 kV transmission line. Such radial method of service would result in disconnecting from the source (Lugo Substation), without a second source line.

DOUBLE OUTAGE CONTINGENCY (N-2)

Without the above additional facility upgrades in place to mitigate the identified base case overload problems, the study determined that the system is also inadequate to accommodate the full output of the HLSP Project under specific double outage contingencies. The HLSP Project will need to be added to the existing Kramer SPS (loss of the Lugo-Kramer No.1 and No.2 230 kV transmission lines) if the additional transmission upgrades identified to mitigate the base case overloads are not implemented.

With the inclusion of the additional upgrades identified for mitigating the HLSP Project triggered base case thermal overloads, the study did not identify any N-2 thermal overload or transient stability problems for the local area. However, on an overall system level, the study determined that the total amount of Lugo Area generation export (South of Lugo and Lugo-Vincent 500 kV transmission lines) is limited to approximately 7,800 MW. With the addition of more generation resources in the North and East of Lugo areas, the amount of excess generation requiring export will eventually exceed 7,800 MW. To increase Lugo Area export limits, additional transmission capacity will be required. However, such requirement is not triggered solely by the addition of the HLSP Project, and therefore, such facility upgrades will be evaluated and recommended as part of a larger study effort in the area (either through the RETI study process or the annual CAISO Transmission Expansion Planning Process).

Transient Stability

The study determined that with the inclusion of the additional upgrades identified for mitigating the HLSP Project triggered base case thermal overloads, the HLSP Project will not need to participate in the existing Kramer SPS. However, the study identified that the tripping requirements for mitigating transient stability problems under single outage of the Lugo-Desert View 230 kV transmission line are more stringent than the tripping requirements for mitigating thermal overloads. Under this outage, the SPS should include tripping of the entire HLSP Project.

Post-Transient Voltage

The study determined that without the facility upgrades identified under base case conditions, the HLSP Project aggravates previously identified voltage problems, including case non-convergence, which are indicative of a potential voltage collapse. The inclusion of the facility upgrades identified for queued ahead generation projects mitigates these problems.

Short-Circuit Duty

The short-circuit duty (SCD) analysis included all queued ahead generation projects based on their application date, but did not model corresponding transmission upgrades. Three-phase-to-ground short-circuit duty study identified two 500 kV, seven 230 kV, and four 115 kV substation locations requiring engineering review. Single-line-to-ground short circuit duty study identified two 500 kV, five 230 kV and one 115 kV substation where duty was increased by more than 0.1 kA, and duty was in excess of 60% of the minimum circuit breaker rating.

Based on the SCD study results and engineering review, the addition of the HLSP Project triggers the need for circuit breaker replacement at the Kramer Substation. It should be noted that a number of projects have recently withdrawn from the interconnection queue or have modified technical parameters consistent with allowances under the LGIP. In addition, the transmission upgrades identified to mitigate the HLSP Project triggered base case overloads have not been included into the short-circuit duty analysis. Consequently, a reevaluation of short-circuit duty will be required as part of the Facilities Study to capture the recent generation interconnection queue withdrawals and modifications, as well as the facility upgrades associated with the mitigation plan identified in this analysis.

Deliverability Assessment

Separate studies entitled "Deliverability Assessments" were performed by the CAISO, which determined that the HLSP Project was not deemed deliverable to the Grid for Resource Adequacy (RA) purposes. The modeling assumptions for the Deliverability Assessment are different from the modeling assumptions in this System Impact Study. For details of the methodology and assumptions for performing the Deliverability Assessment, please refer to the Baseline Generation Deliverability Study – 2007 Q3 Study Plan posted at http://www.caiso.com/1c5d/1c5ddc8a63cd0.pdf. In particular, the 2007 Q3 Deliverability Assessment modeled the following transmission system upgrades:

- Lugo 500/230 kV No.3 Transformer Bank (AA-Bank);
- Kramer-Lugo No.3 230 kV Transmission Line;[20]
- Victor-Lugo No.3 230 kV Transmission Line;
- Replacement of the Lugo-Pisgah No.2 230 kV with a new 500 kV Transmission Line;
- Operation of the remaining Lugo-Pisgah 230 kV line as two radial lines
    - Radial into Lugo connecting the new Desert View Substation;
    - Radial into Pisgah connecting the new Abelia and new Galway Substations.

The study did not include the new Cool Water-Desert View 230 kV transmission line(s) recommended in this study to mitigate the identified base case thermal overloads on the two Kramer-Lugo 230 kV transmission lines.

[20] SPS was not modeled due to unknown specifications. With SPS and the additional Kramer-Lugo No.3 Transmission Line, the HLSP Project would be deemed deliverable.

Cost Estimates

The ***Nonbinding*** Cost Estimate for the interconnection facilities and reliability network upgrades triggered by the HLSP Project is $131.7[21] million. The ***Nonbinding*** Cost Estimate for the maximum exposure for network upgrades triggered by queued ahead projects is $257.0[22] million. These estimates have been developed without detailed cost engineering, and will be refined in the Facilities Study.

Facilities Study

A Facilities Study will be required for the HLSP Project. The Facilities Study will include detailed cost estimates for SCE network upgrades and direct assignment interconnection facilities required to interconnect the HLSP Project to the grid and should:

1. Develop cost estimates and schedule for the construction of a new Hinkley Substation to loop the existing Cool Water-Kramer No.1 230 kV transmission line. The Substation should initially consist of a 230 kV four-bay position, with five circuit breakers to interconnect the project. (Case A)

2. Develop cost estimates and schedule for the looping of the existing Cool Water-Kramer 230 kV transmission line into the new Hinkley Substation. (Case A)

3. Develop cost estimate and schedule for the protection and telecom requirements to support the new Hinkley Substation. (Case A)

4. Develop cost estimates and schedule for the construction of a new Desert View substation to loop the existing Lugo-Pisgah No.1 230 kV transmission line. The Substation would be sized for 500/230/115 kV facilities and would be capable of ultimately accommodating four 500/230 kV transformer banks, but would initially be equipped with eight 230 kV bay positions. (Second four-bay position - Case A, Initial four-bay position - Case B) and 13 circuit-breakers (Four are Case A, five are Case B, and remaining 4 are generation direct assignment).

5. Develop cost estimates and schedule for the removal of approximately 16-miles of existing Lugo-Pisgah No.1 230 kV transmission line between Lugo and the proposed Desert View Substation. (Case B)

6. Develop cost estimates and schedule for the construction of a new 16-mile double-circuit 500 kV Lugo-Desert View transmission line with one circuit energized at 500 kV and the second circuit initially energized at 230 kV. (Case B)

7. Develop cost estimate and schedule for the protection and telecom requirements to support the new Desert View Substation. (Case B)

[21] This cost estimate can increase to $227.2 million (excluding right-of-way for Cool Water-Desert View 230 kV transmission line) depending on the final routing alternative selected for queued ahead generation triggered reliability upgrades.
[22] This cost estimate can decrease to $216.3 million (excluding right-of-way) depending on the final routing alternative selected for queued ahead generation triggered reliability upgrades.

8. Develop cost estimates and schedule for the installation of the third Lugo 500/230 kV transformer bank. (Case B)

9. Develop cost estimates and schedule for the construction of a third Lugo-Victor 230 kV transmission line. (Case B)

10. Develop cost estimates and schedule for the construction of a new 37-mile double-circuit 230 kV Cool Water-Desert View transmission line (2B-1590 ACSR) with one initial circuit. (Case A)

11. Develop cost estimate and schedule for the SPS required to trip the HLSP under two specific single outage contingencies. (Case A)

12. Review identified substation locations shown in Table 2-5 through Table 2-8 to evaluate the need for circuit breaker replacements and develop corresponding cost estimates.

13. Perform any technical assessment required to account for potential queued ahead generation project withdrawals (CAISO #109, #110, #114, #115, #116, and #120) consistent with the CAISO Petition for Waiver of Tariff Provisions to Accommodate Transition to Reformed Large Generator Interconnection Procedures, and Motion to Shorten Comment Period FERC Filing, if approved at FERC.

14. SCE and the CAISO to determine the appropriate classification of the identified Network Upgrades (i.e. Reliability Network Upgrades versus Delivery Network Upgrades.)

Appendix A and B to the Interconnection Study is included in full reports are on file with the US Department of Energy at the following website: http://lpo.energy.gov/?page_id=1514

APPENDIX C

SOUTHWEST GAS CORPORATION CORRESPONDENCE

From: Nasrin Houston [Nasrin.Houston@swgas.com]
Sent: Monday, June 08, 2009 10:28 AM
To: Frederick Redell
Cc: Christopher.Glosemeyer@abencs.abengoa.com; scott.frier@solar.abengoa.com; Erich Trombley
Subject: RE: Gas Interconnection for Solar Project

Fred,

Our Engineering Planning has completed their study and determined that the existing 16-inch pipeline has sufficient capacity to serve the Mojave Solar project with 42Mcfh load at 30 psig delivery pressure. To serve the two solar plants at a minimum the following facilities are required.

- A tap off of the 16 inch pipeline which includes pressure regulation
- Gas line from the tap to each delivery location
- A high pressure meter set at each delivery location

I hope this information helps. If you have any questions please contact me.

Regards,

Nasrin Houston
Industrial Gas Engineer
Southwest Gas Corporation
4300 West Tropicana Avenue
Las Vegas, NV 89103
P 702-365-2549I M 702-682-9395I F 702-740-9209
E nasrin.houston@swgas.com

>>> Frederick Redell <fred@redellengineering.com> 5/27/2009 7:35 PM >>>
Nasrin,

We are set as previously described; no changes needed. Please let me know when can have the engineering study available.

Thanks,
-Fred

From: Nasrin Houston [Nasrin.Houston@swgas.com]
Sent: Wednesday, May 20, 2009 2:14 PM
To: Frederick Redell
Subject: RE: Gas Interconnection for Solar Project

Thank you Fred. I will watch for your email with the revised flow/pressure numbers.

Nasrin

>>> Frederick Redell <fred@redellengineering.com> 5/20/2009 1:58 PM >>>

Nasrin,

Attached is the project boundary and the approximate locations of the boilers in Google Earth format. You should be able to clearly see where your pipeline (Harper Lake Rd) intersects the project and is with respect to the service locations.

We are re-running our numbers on gas flows and pressures to make sure we have the right values. Please give me a day or so to confirm. Worst case we would need twice the flow and twice the pressure. This should still be well within the capability of that line but I want to be sure we need that before we proceed with those numbers.

Regards,
Fred

-----Original Message-----
From: Nasrin Houston [mailto:Nasrin.Houston@swgas.com]
Sent: Wednesday, May 20, 2009 11:42 AM
To: Frederick Redell
Subject: Re: Gas Interconnection for Solar Project

Thank you.
-----Original Message-----
From: Frederick Redell <fred@redellengineering.com>
To: Houston, Nasrin <Nasrin.Houston@swgas.com>

Sent: 5/20/2009 11:39:54 AM
Subject: RE: Gas Interconnection for Solar Project

Nasrin,

I was out of the office until just now and will put together Google files for your reference.

-Fred

From: Frederick Redell
Sent: Wednesday, May 13, 2009 8:58 AM
To: Frederick Redell; 'Nasrin Houston'
Cc: 'Christopher.Glosemeyer@abencs.abengoa.com'
Subject: RE: Gas Interconnection for Solar Project

Nasrin,

As we discussed on the phone, if I have 30 +/- 5 psig delivery pressure at each power island, that should be fine.

-Fred

The information in this electronic mail communication contains confidential information which is the property of the sender and may be protected by the attorney-client privilege and/or attorney work product doctrine. It is intended solely for the addressee. Access to this e-mail by anyone else is unauthorized by the sender. If you are not the intended recipient, you are hereby notified that any disclosure, copying, or distribution of the contents of this e-mail transmission or the taking or omission of any action in reliance thereon or pursuant thereto, is prohibited, and may be unlawful. If you received this e-mail in error, please notify us

immediately of your receipt of this message by e-mail and destroy this communication, any attachments, and all copies thereof. *Thank you for your cooperation.*

The information in this electronic mail communication contains confidential information which is the property of the sender and may be protected by the attorney-client privilege and/or attorney work product doctrine. It is intended solely for the addressee. Access to this e-mail by anyone else is unauthorized by the sender. If you are not the intended recipient, you are hereby notified that any disclosure, copying, or distribution of the contents of this e-mail transmission or the taking or omission of any action in reliance thereon or pursuant thereto, is prohibited, and may be unlawful. If you received this e-mail in error, please notify us immediately of your receipt of this message by e-mail and destroy this communication, any attachments, and all copies thereof. *Thank you for your cooperation.*

APPENDIX D

SOLAR PLANT DETAILS

APPENDIX D

DETAILED DESCRIPTION OF SOLAR POWER PLANT

Appendix D: Detail of Solar Power Plant

This appendix contains specific information and details of the AMSP power plant components, electrical processes, civil and physical construction, as well as plant operations. The information supplements the Proposed Action in Chapter 2 and provides context to Chapter 4. The start of commercial operation is planned for winter of 2012, subject to timing of regulatory approvals and the achievement of Project equipment procurement and construction milestones.

Major Solar Equipment and Material

The major pieces of equipment for the proposed solar portion of each plant are as follows:

- Solar collector arrays (SCA),
- SCA components: mirrors, HCEs, ball-joint connectors, etc.,
- HTF,
- SSG System,
- HTF freeze-protection heat exchangers,
- HTF pumps,
- HTF expansion vessels and tanks, and
- HTF piping headers.

Each solar field encompasses approximately 710 acres of the plant sites and utilizes solar trough technology similar to the nine existing SEGS units but with design improvements to enhance performance.

Solar Collector Arrays. The Solar Collector Arrays (SCAs) are the mirrored, parabolic trough structures. Each SCA will be 125 to 150 meters long. The SCA rotate around a north-south axis to track the sun through the sky during the day. The axis of rotation is located near the collector center of mass to minimize the required tracking power. The drive system will use hydraulic rams or electric motors to position the collector depending on final design. The closed-loop tracking system relies on a sun sensor or position feedback sensor for the precise alignment

Mirrors. The SCA are fitted with curved mirrors which are specifically engineered and manufactured for solar parabolic trough applications. The current state-of-the-art, low iron glass mirrors are highly reliable. There has been no long-term degradation in the reflective quality of the low-iron glass mirrors; ten year-old mirrors can be cleaned and brought back to like-new reflectivity. Long-term endurance of the mirror, as measured by the experience at SEGS, indicates that mirror life of 30 years or more can be expected for the Project.

Development of an efficient and cost-effective program for monitoring mirror reflectivity and washing is critical. Differing seasonal soiling rates (higher in the summer) require flexible procedures. Operations and Maintenance (O&M) procedures at the SEGS plants were well established and similar methods will be used for this Project. All cleaning methods use demineralized water for best effectiveness. The periodic monitoring of mirror reflectivity provides a valuable quality control tool for washing and helps to optimize wash labor. As a

general rule, the reflectivity of glass mirrors can be maintained near design levels with a good washing program.

Heat Collection Elements. The HCE consists of a steel tube with a selective surface, surrounded by an evacuated glass tube insulator. The coating gives it excellent selective heat transfer properties with a high solar absorptivity and low thermal emissivity. The HCE incorporates glass-to-metal seals and metal bellows to achieve the vacuum-tight enclosure. The vacuum enclosure serves primarily to protect the selective surface and to reduce heat losses by insulating it while having high transmissivity.

The outer glass cylinder has an anti-reflective coating on the outer surfaces to reduce transmissive losses through the glass tube. Typically, getters (metallic substances that are designed to absorb gas molecules) are installed in the vacuum space to absorb hydrogen and other gases that permeate into the vacuum annulus over time to maintain its insulating properties.

Connectors. It is expected that a hard-piped assembly with ball joints will be used to connect the SCAs to the headers and SCAs to each other, similar to those being used at the SEGS plants at Harper Dry Lake. Based upon experiences at SEGS, the ball joint assembly has a number of advantages over previous designs using flexhoses, including reduced failures, lower cost, lower head loss, and reduced heat losses.

Heat Transfer Fluid. It is expected that Therminol™ VP-1, Dowtherm A, or equivalent will be used as the HTF. These synthetic oils are special high-temperature oils with an excellent operating history and are widely used in solar thermal and other high-temperature heat transfer applications. These oils are aromatic hydrocarbons, specifically biphenyldiphenyl oxide. The oil is regulated as a hazardous material by the State of California.

Solar Steam Generator System. SSGs are designed differently than conventional gas-fired boilers in that they are “fired” with hot HTF instead of hot combustion gases. The design uses natural circulation steam drums with shell-and-tube evaporators. The SSG system includes heat exchangers for preheating the condensate, for steam production, for superheating the steam, and for reheating steam.

HTF Freeze Protection Heat Exchangers. To eliminate the problem of HTF freezing, steamfed shell-and-tube heat exchangers will be used to keep the HTF above 100 °F whenever the facility is offline and ambient temperature warrants. The auxiliary boilers will supply the heat for freeze protection. The use of steam-fed HTF heat exchangers reduces the number of individual emission sources (i.e. eliminates natural-gas-fired HTF heaters since an auxiliary boiler exists for other auxiliary purposes).

HTF Pumps. HTF pumps are used to circulate the HTF through the solar field and back to the power island for steam generation and are specifically designed for this high temperature oil

application. Pumps for high temperature applications typically include seal cooling and high temperature materials to preserve component function under extreme conditions.

HTF Expansion Vessels and Tanks. To accommodate the volumetric change that occurs when heating the HTF to the operating temperature, expansion vessels and tanks are required. Nitrogen will be used to provide a blanket on the headspace of the expansion vessels and tanks. The nitrogen blanket prevents oxidation and contamination of the HTF by reducing its exposure to atmospheric air. In the expansion vessels, the nitrogen also assists with meeting the net positive suction head requirements for the HTF pumps. HTF expansion tanks are at a lower pressure and temperature than expansion vessels to minimize HTF loss if venting is required during daily cyclical operations. It is anticipated that there will be eight expansion vessels and two overflow tanks on each power island.

HTF Piping Header. HTF is transported through the solar field using a supply-and-return header system. The header system assists in balancing flow through the SCA loops and their associated HCEs. Piping expansion loops will be located throughout the plant as required to maintain the composite pipe stress within ASME B31.3 code allowable limits. The composite pipe stress includes seismic and thermal stresses. It is anticipated that the solar field will be divided into sections with automatic or semiautomatic isolation valves. The isolation valves will either be triggered automatically (e.g., by ground acceleration in the event of an earthquake) or by the operator inside the control room. The isolation valves will be located to minimize the volume of HTF leakage during a pipe failure. The piping in the solar array will be designed and constructed to allow movement due to thermal expansion – the steel piping in the mirrored trough sections of the array will be connected to the HTF distribution headers with ball joints and the piping will not be rigidly mounted to foundations or other structures, structurally decoupling the system from seismic ground shaking in the event of an earthquake.

These following components comprise the working elements of each power island in the solar plant. Each power island is largely identical. As shown, major components of each Alpha and Beta power island include:

- Solar steam generators (SSG) and associated heat exchangers,
- One steam turbine-generator (STG) and condenser,
- Electrical switchyard with step-up transformer and auxiliary transformer,
- One wet cooling tower,
- One natural-gas-fired auxiliary boiler,
- Steam-fed HTF freeze protection heat exchangers,
- HTF expansion vessels and HTF expansion tanks,
- Firewater pump and pump house with associated diesel fuel tank,
- One raw water storage tank,
- One combined service water and firewater storage tank,
- Various water treatment storage tanks,
- Demineralized water storage tank, and
- Ancillary equipment.

Process Description

The power generation process and thermodynamic cycle employed by the Project at both the Alpha and Beta power islands is described below. The major elements of each power island include the following:

- One STG,
- SSGs and associated SSG heat exchangers,
- One water-cooled condenser,
- Feedwater pumps,
- One deaerator,
- Multiple feedwater heaters, and
- One wet cooling tower.

The proposed power cycle is the Rankine-with-reheat thermodynamic cycle with heat supplied via HTF, heated by the solar field to a temperature of approximately 740°F. Each plant site utilizes approximately 710 acres of the total land for solar thermal collector arrays. A preliminary heat balance diagram for the process is included in Figure D-1, Heat Balance Diagram.

Overall annual availability of the proposed Project facilities is expected to be a minimum of 95 percent, excluding non-daylight hours. The Project's capacity factor depends on the local solar insolation, but estimated to be approximately 600,000 to 630,000 megawatthours (MWh) per year net (both Plants combined) while operating for approximately 3,024 hours per year. This production estimate was made using the Solar Advisor Model software developed and maintained by the National Renewable Energy Laboratory.

The Project will use the Rankine-with-reheat thermodynamic cycle, described as follows:

- Process 1: The working fluid (water) is pumped from low to high pressure. During this process, steam extracted from the STG is used to preheat the water prior to entering the SSG system, which increases overall cycle efficiency.
- Process 2: The high pressure working fluid enters the SSG system where it is heated by the HTF to become superheated steam.
- Process 3: The superheated steam expands through the high pressure section of the steam turbine turning the generator to produce electricity. This steam is then reheated in a reheater that is part of the SSG system and sent to the low pressure steam turbine. All sections of the STG decrease the temperature and pressure of the steam with the low pressure section extracting the last available energy from the steam until the steam is operating under vacuum pressure.
- Process 4: The wet steam from the low pressure section of the steam turbine then enters the condenser where it is condensed back into a saturated liquid. The condensed liquid returns to Process 1.

The solar field provides the heat input in Process 2 and for the reheater in Process 3. As the HTF is circulated through the solar field, light from the sun reflects off the solar collector's parabolic troughs and is concentrated on the heat collection elements (HCEs) located at the focal point of the parabola. HTF flowing through these HCEs absorbs the heat and provides a high-temperature energy source for the Rankine Cycle.

Low quality waste heat is rejected in Process 4. As the turbine exhaust is condensed, the heat is transferred to the cooling-tower circulating water. The warm cooling tower circulating water carries the heat to the wet, mechanical draft cooling tower where the heat is rejected via evaporation and convection, returning cooled water to the condenser.

Steam Turbine-Generator

Each power island sends steam from the SSGs is to the STG. The steam expands through the STG turbine blades to drive the steam turbine, which in turn drives the generator. The Project's STGs are expected to be two-casing, reheat type with multiple feedwater heater extraction points and axial low-pressure exhaust. The STG is equipped with accessories required to provide efficient, safe, and reliable operation, including the following:

- Governor system,
- Steam admission system,
- Gland seal system,
- Lubrication oil system including oil coolers and filters,
- Generator coolers, and
- Metal enclosures designed for outdoor service for STG auxiliary systems.

Electrical System Description

All of the net power produced by the proposed facility is currently expected to be delivered to the statewide transmission grid through the Project's interconnection with the existing Kramer-Cool Water 230 kV transmission line. Roughly 10% of the Project's output will be used onsite for plant auxiliaries such as pumps, control systems, and general facility loads including lighting and heating, ventilation, and air conditioning (HVAC). Some of the power needed for on-site uses will be converted from alternating current (AC) to direct current (DC) for power plant control systems and emergency backup systems such as lube oil pumps and the STG turning gear. The descriptions of the major electrical systems and equipment provided in the following text reflect AC power unless otherwise noted. One-line diagrams of the major electrical systems are presented in Figures D-2 through D-11, Electrical Diagrams.

Major Electrical Equipment and Systems

On each power island, power will be generated by its STG at 13.8 kV, depending on the final generator selection, and stepped up by a fan-cooled generator step-up transformer in the 230-kV power island switchyard for connection to the transmission interconnection. Plant auxiliary load will be from an auxiliary power transformer fed from the 230-kV power island switchyard

with a step-down transformer and distributed internally to the plant loads at 13.8 kV. There will be one emergency diesel engine-driven generator for each power island to provide standby power and facilitate plant shutdown in the event of power disruption. Each power island can be run independently.

Grounding and Surge Protection

All electrical systems are potentially susceptible to ground faults, lightning, and switching surges which could pose hazards to site personnel and electrical equipment if not properly grounded.

The station grounding system provides an adequate path to ground and bonding to permit the dissipation of current created by these events. The station-grounding grid will be designed for adequate capacity to withstand ground fault current and limit step and touch potentials in coordination with protective relaying and equipment purchased to limit the exposure to equipment and personnel.

Bare conductors will be installed below-grade in a grid pattern throughout the power island and solar field areas. Each junction of the grid will be bonded together by an exothermic weld or compression connection (above grade only). Soil resistivity readings will be used to determine the necessary numbers of ground rods and grid spacing to ensure safe step and touch potentials under severe fault conditions. Grounding stingers will be brought from the ground grid to connect to building steel and non-energized metallic parts of electrical equipment.

Electrical Generation

The Project's STGs will tie into a 230-kV onsite switchyard for each power island. Each 230-kV onsite switchyard will be a 230-kV single-breaker design, see Figure D-12. Each onsite switchyard connects to the interconnection substation on the Project site. The interconnection substation will be a 230-kV, four-position, breaker-and-a-half design consisting of one position for each of the power island interconnections.

Each generator will contain current transformers (CTs), surge arrestors, and neutral grounding transformers for protection and metering. The neutral grounding transformer will be approximately 20 kilovolt amps (kVA) on each unit. The eighteen CTs on each unit will be 8,000/5 amps (A). Surge arrestors will be metal oxide varistor (MOV) type rated for 30 kV Basic Insulation Level (BIL) to withstand high-voltage impulses.

Each generator will be connected to a main power transformer via an isolated phase bus (IPB). The IPB will be rated for 15 kV/8,000 A. Each IPB will be tapped with potential transformers and lightning arrestors for metering and protection. The potential transformers will be rated for 14.4/0.12 kV.

The main power transformer (MPT) will be approximately 175 megavolt-amps (MVA), 13.8/230 kV, two-winding, delta-wye grounded, 9 %Z (impedance) and fan-cooled (using oil-immersed natural circulation, multi-stage, forced air cooling). The neutral point of high-voltage winding will be solidly grounded. The main step-up transformer will have metal oxide surge arrestors connected to the high-voltage terminals and will have manual de-energized ("no-load") tap changers located in high-voltage windings to allow for a nominal secondary voltage plus or

minus five percent with a 2.5 percent differential to allow for generator output voltage variations. The step-up transformer will rest on a concrete pad with a perimeter berm, designed to contain the transformer non-PCB insulating oil in the event of a leak or spill, and will have a deluge-type fire protection system.

The power island switchyard will be located near the Generator Step-up (GSU) and will require a minimum 556 thousand circular mils (kcmil) size steel-reinforced, aluminum conductor (ACSR) from the interconnection substation to each transformer. Each switchyard will consist of two 245 kV switchyard circuit breaker for the protection of the line to the grid, with 245 kV, 1200 A disconnect switches on each side of the breaker for maintenance and isolation of the associated transformer. The switchyard breaker will be of the dead tank design with 1200/5 multi-ratio current transformers on each bushing. Additionally each circuit breaker will be equipped with 230/0.12 kV capacitor-controlled voltage transformers in a stand-alone cabinet for metering, synchronizing, and protection. Each circuit breaker shall be connected to each other with a 245 kV 1200 A bus to serve as the tie between the transmission line and the power transformers. This bus will be tubular aluminum alloy. Cable connections between the tube bus and equipment will be aluminum or aluminum alloy type cable. Tube, cables, and support structures will meet electrical and mechanical design standards. Each 245-kV bus will be equipped with 245/0.12 kV capacitor-controlled voltage transformers for metering and protection with the transmission line.

A disconnect switch will be located at the gen-tie line termination within the switchyard for line isolation. The switchyard will be equipped with sensitive 1200/5 A current transformers in each circuit breaker and 245/0.12 kV capacitor controlled voltage transformers located on the 230 kV switchyard bus for net revenue metering. Lightning arresters will be provided in the area of the takeoff towers to protect against surges due to lightning strikes and switching.

Electrical faults will be detected, isolated, and cleared in a safe and coordinated manner as soon as practical to ensure the safety of equipment, personnel, and the public. Protective relaying will meet Institute of Electrical and Electronic Engineers (IEEE) requirements and be coordinated with the interconnected transmission system owner.

Electrical System for Plant Auxiliaries

Power for each Plant's auxiliaries will be supplied at 13.8 kV from one non-redundant three-winding auxiliary power transformers (APT). Each APT is connected to the 15kV medium voltage switchgear via a 15 kV/1600 A non-segregated bus duct.

The APT will be approximately 20 MVA, 230/13.8 kV, two-winding, delta-wye grounded, 8 %Z (impedance) and fan-cooled (using oil-immersed natural circulation, multi-stage, forced air cooling). The neutral point of the low-voltage winding will be high-resistant grounded. The auxiliary step-up transformer will have metal oxide surge arrestors connected to the high-voltage terminals and have manual de-energized ("no-load") tap changers located in high-voltage windings to allow for a nominal secondary voltage plus or minus five percent with a 2.5 percent differential to allow for generator output voltage variations. The auxiliary power transformer will rest on a concrete pad with a perimeter berm designed to contain the

transformer non-PCB insulating oil in the event of a leak or spill and has a deluge-type fire protection system.

The 15 kV medium-voltage switchgear distributes power to the plant's 4-kV and 0.48-kV motors through auxiliary transformers. The low voltage side of each of the auxiliary transformers connects to the 480-Volt (V) switchgear. The 480-V switchgear distributes power to the plant's large 480-V loads and to the various 480-V motor control centers (MCCs) supplying power to the smaller plant loads. The MCCs distribute power to the plant's intermediate 480-V loads and to power panels serving small 480-V loads.

In the event of power loss by the APT, an emergency diesel engine-driven generator will supply power to the 15-kV switchgear for proper shutdown of the plant, under a load-shedding scheme. The standby generator will be equipped with synchronizing breakers for maintenance testing under normal load conditions.

DC Power Supply System

Each proposed Plant is equipped with a (direct current) DC power supply system consisting of a bank of 125-VDC batteries, a 125-VDC battery charger, metering, ground detectors, and distribution panels. Under normal operating conditions, the battery charger supplies DC power to the DC loads. The battery charger receives 480-V, three-phase AC power from the electrical distribution system serving plant auxiliaries. The battery charger continuously charges the battery bank while supplying DC power to the DC loads. Under abnormal or emergency conditions when AC power is not available, the battery bank supplies DC power directly to the DC loads. The battery bank will be sized to power the DC loads and essential-service AC loads through an inverter for a sufficient amount of time to provide for safe and damage-free shutdown of the power plant. Recharging the battery bank will occur whenever AC power is reestablished.

The DC power supply system will provide power for critical control circuits, power for control of the 13.8-kV, 4.16-kV and 480-V switchgear, and power for DC emergency backup systems. Proposed emergency backup systems include DC lighting and DC lube-oil and seal-oil pumps for the STG.

Essential Service AC System

An essential-service AC system (120 V, single-phase) will provide power to essential instrumentation, critical equipment loads, safety systems, and equipment protection systems that require uninterruptible AC power. The essential-service AC system and the DC power supply system will both be designed to ensure that critical safety and equipment protection control circuits are always energized and able to function in the event of unit trip or loss of AC power.

The proposed essential-service AC system consists of an inverter, a solid-state transfer switch, a manual bypass switch, an alternate AC source transformer and voltage regulator, and AC panel boards. The DC power supply system is the normal source of power to the essential-service AC system. Power flows from the DC power supply system through the inverter to the AC essential-service panel boards. The solid-state transfer switch continuously monitors both the

inverter output and the alternate AC source. Upon loss of the inverter output and without interruption of power, the transfer switch automatically transfers essential-service AC loads from the inverter output to the alternate AC source. The manual bypass switch enables isolation of the inverter and transfer switch for testing and maintenance without interruption of power to the essential-service AC loads.

Plant Auxiliary Systems

Auxiliary Boiler

One nominal 15,000-pound-per-hour auxiliary boiler will be included on each power island. This auxiliary boiler will be able to provide steam to the HTF freeze protection heat exchangers, steam turbine seal system, deaerator and other components while the SSG is offline. Once the plant commences normal operations, the use of the natural-gas-fired auxiliary boilers ceases. Each boiler will require approximately 21.5 million British thermal units per hour (MMBtu/hr) of natural gas at full load. The estimated annual natural gas usage for the Project (both auxiliary boilers combined) is 94,280 MMBtu.

Fuel Supply and Use

The auxiliary boilers will be fueled by natural gas supplied from an existing 16-inch diameter pipeline that runs to the project under Harper Lake Road. This pipeline was installed for the original six SEGS projects envisioned at Harper Dry Lake. SGC, the owner of the pipeline, confirms that excess capacity exists in the pipeline due to the sizing of the pipeline for the SEGS projects, which used natural gas to fire full-capacity boilers. No offsite pipeline facilities are proposed as a part of this Project. SGC was contacted and studied the demand requested and indicates that sufficient capacity exists to supply the Project.

Natural gas delivered to the Project site will flow through a revenue-quality flow meter, pressure regulation station, and filtering equipment and will provide gas to the auxiliary boilers. Safety pressure relief valves are provided downstream of the pressure regulation valves. The peak natural gas rate is 21.5 million British thermal units per hour (MMBtu/hr) for each auxiliary boiler. A maximum of 94,280 MMBtu/year of fuel consumption will be expected for each boiler. Table D-1 shows the typical composition of the natural gas used to fuel the Project's auxiliary boilers.

Table D-1: Typical Natural Gas Composition

Component	Mole Percent (%)
Methane, CH4	95
Ethane, C2H6	2
Carbon dioxide, CO2	1
Nitrogen, N2	2
Total	**100.0**
Sulfur (grains per 100 dry standard cubic feet (dscf))	0.25
Higher Heating Value (Btu/scf)	1,025

Other Auxiliary Systems
The following plant auxiliary systems will control, protect, and support the power plant and its operation and are described below.

Distributed Control System
The Distributed Control System (DCS) will provide control, monitoring, alarm, and data storage functions for power plant systems. These include:

- Control of the STG, SSG System and balance-of-plant systems in a coordinated manner,
- Monitoring of operating parameters from plant systems and equipment,
- Visual display of the associated operating data to control operators and technicians,
- Detection of abnormal operating parameters and parameter trends,
- Provision of visual and audible alarms to apprise control operators of such conditions, and
- Storage and retrieval of historical operating data.

The DCS is a microprocessor-based system. Redundant capability is provided for critical DCS components such that no single component failure will cause a plant outage. The DCS consists of the following major components:

- Computer monitor-based control operator interface (redundant),
- Computer monitor-based control engineering work station,
- Multi-function processors (redundant),
- Input/output processors (redundant for critical control parameters),
- Field sensors and distributed processors (redundant for critical control parameters),
- Historical data archive, and
- Printers, data highways, data links, control cabling, and cable trays.

The DCS is linked to the control systems furnished by the STG supplier and to the solar field controls. These data links will provide STG control, monitoring, alarm, and data storage functions via the control operator interface and control technician workstation of the DCS. The DCS has a supervisory control over the solar field. The control of SCA is done at SCA level and networking back to DCS, the methods could be fiber optic, Ethernet link or wireless control.

Lighting System
The Project's lighting system will provide operations and maintenance personnel with illumination in both normal and emergency conditions. The system will consist primarily of AC lighting, but will include DC lighting for activities or emergency egress required during an outage of the plant's AC electrical system. The lighting system will also provide AC convenience outlets for portable lamps and tools. Lighting will be designed to provide the minimum illumination needed to achieve safety and security objectives and will be shielded and oriented

to focus illumination on the desired areas and minimize additional nighttime illumination in the site vicinity.

Cathodic Protection System
Cathodic protection systems protect against electrochemical corrosion of underground metal piping and structures. Underground metal structures will have necessary cathodic protection based on soil conditions.

Freeze Protection System
Freeze protection systems (heat tracing) will be employed to protect small water and condensate piping systems that cannot be easily drained. Also, due to the high freezing temperature of the solar field's HTF (54°F), steam-fed HTF Freeze Protection heat exchangers will be provided to protect the system during the night hours and colder months, in addition to electric heat tracing and insulation.

Service Air and Instrument Air Systems
The service air system supplies compressed air to hose connections located at intervals throughout the power plant. Compressors deliver compressed air at a regulated pressure to the service-air piping network.

The instrument air system provides dry, filtered air to pneumatic operators and devices throughout the power plant. Air from the service air system is dried, filtered, and pressure regulated prior to delivery to the instrument-air piping network.

Telemetry
The AMSP will utilize electronic systems to control equipment and facilities' operations over a large site. Because of the presence of various important Department of Defense (DOD) facilities/activities in the general area (e.g., Edwards Air Force Base, China Lake Naval Weapons Center and associated ranges), the Project is sensitive to the need to ensure that use of the electronic spectrum by the AMSP will not interfere with DOD activities. The Project will coordinate any telemetry selection with the DOD as needed to ensure compatibility.

HTF Leak Detection
Leak detection of HTF will be accomplished in a combination of ways. Small leaks, possible at ball joints or other connections, will be located based on daily inspection of the solar field. Those small leaks could then be corrected via repacking of joints or valves or by minor repairs if needed. The ability to isolate loops and sections of the field will allow for quick repairs. Larger sudden leaks are a greater concern. In order to identify and react to such leaks quickly, the Project is considering a combination of remote pressure sensing equipment and remote operating valves that will allow for isolation of large areas of the field, or possibly the entire field. Such features will be developed as part of the detail design process.

Process Water and Water Treatment
Steam Cycle Process Water

Makeup water for the steam cycle must meet ASME Boiler Code for silica and dissolved solids. To meet these specifications, water will be processed through a demineralized water system. This system is anticipated to consist of multiple unit operations, concluding with mixed-bed demineralizers. Water produced by this system will only be used for makeup to the steam cycle. The demineralized water treatment will consist of a final stage of RO treatment and mixed-bed ion-exchange polishers. The reject stream from the RO treatment is recycled back to the RO surge tank, resulting in no net waste stream. The mixed-bed ion-exchange units are designed for regeneration off-site, and also have no waste stream associated with this process.

Additional conditioning of the condensate and feedwater circulating in the steam cycle will be provided by means of a chemical feed system. To minimize corrosion, an oxygen scavenger for dissolved oxygen control and an alkaline solution for pH control are fed into the condensate. To minimize scale formation in the SSG, a solution of disodium phosphate (DSP) and trisodium phosphate may be fed into each feedwater system. The chemical feed systems will include an oxygen scavenger feed tank, an alkaline solution (amine) feed tank, and a phosphate solution feed tank. The feed tanks will be provided with two full-capacity metering pumps.

A steam cycle sampling and analysis system will monitor the water quality at various points in the plant's steam cycle. The water quality data will be used to guide adjustments in water treatment processes and to determine the need for other corrective operational or maintenance measures. Steam and water samples are routed to a sample panel where steam samples are condensed and the pressure and temperature of all samples are reduced as necessary. The samples are then directed to automatic analyzers for continuous monitoring of conductivity and pH. All monitored values are indicated at the sample panel and critical values will be transmitted to the plant control room. Grab samples will be periodically obtained at the sample panel for chemical analyses that provide information on a range of water quality parameters.

Circulating Water Treatment

The blowdown from the circulating water/cooling tower system will be continually treated by lime-softening clarification (clarifier) and filtration processes, and then delivered to a clearwell. A portion of this stream will then be further treated for various plant uses that require higher purity water, such as SCA cleaning and steam system makeup. This will be a demand-based usage, where any excess flow out of the clearwell is simply recycled back to the cooling tower for further use in the circulating water system. The clarifier will use lime (calcium hydroxide) and soda ash (sodium carbonate) to precipitate hardness and alkalinity from the cooling tower blowdown water. Each of these systems will include a bulk dry storage bin, slurry makeup tank, and two full capacity delivery pumps. The clarifier also will use magnesium hydroxide slurry, a coagulant (ferric chloride), and a flocculent polymer to aid in settling/removing suspended solids in the clarification process. Each of these chemicals will include a bulk storage tank and two full capacity metering pumps.

The clarifier solids will be further concentrated in a thickener. The overflow or clear water from the thickener will be recycled as makeup to the cooling tower. The thickener solids stream will then be delivered to a mechanical filter press, where remaining water will be removed, again

for reuse in the cooling tower. This process will allow for an efficient use of the water while reducing the capital and operating expense of other processes. This process reduces the metals content in the water prior to use elsewhere in the system along with extracting these prior to discharge in the evaporation ponds.

The overflow water from the clarifier will be delivered to the clarified water tank, and then pumped through a set of pressure filters. The pressure filters contain typical standard sand and anthracite granular media, and will remove the small amount of solids that carry over from the clarifier. The pressure filters will be backwashed periodically to remove accumulated solids. This backwash water will be recycled back to the clarifier for treatment, so that there is no net waste stream from the pressure filters. The pressure filter product stream will then be directed to the clear well tank.

Following the clear well, the water will be treated by the Cooling Tower Reverse Osmosis (CTRO) system, in order to be utilized for other plant requirements. As pre-treatment to the CTRO process, ion-exchange-type softeners will be utilized to remove any dissolved hardness minerals that remain after the clarifier. The softeners will be periodically regenerated using a salt (sodium chloride) solution. The waste from the softeners will be separated so that backwash and rinse water from the softeners will be recycled back to the clarifier for reuse and the brine stream will be delivered to the evaporation ponds.

The product stream from the CTRO is delivered to the RO surge tank. The flow out of the clear well and through the CTRO is demand-based, so that any excess clear well water will be recycled back to the cooling tower for further use. This format will minimize water usage of the Plant.

The CTRO utilizes several stages of reverse osmosis (RO) treatment to remove most of the mineral content of the water. The reject stream from the CTRO process will be brackish water; and this will be discharged to the evaporation ponds. The CTRO process is designed to minimize the amount of waste water sent to the Ponds. The RO surge tank water is withdrawn as required, for further treatment and ultimately for use in SCA washing and steam cycle makeup.

Fire Protection

Fire protection systems will be provided to limit personnel injury, property loss, and Project downtime resulting from a fire. The systems include a fire protection water system and portable fire extinguishers. The Project's fire protection water system will be supplied from a dedicated 360,000-gallon portion of the 1,930,000-gallon service water storage tanks located on each Plant site. One electric and one diesel-fueled backup firewater pump, each with a capacity of 3,000 gallons per minute, will deliver water to the fire-protection water piping network on each Plant site. A smaller electric motor-driven jockey pump will maintain pressure in the piping network.

The piping network will be configured in a loop so that a piping failure could be isolated with shutoff valves without interrupting the supply of water to a majority of the loop. The piping network will supply fire hydrants located at intervals throughout the power island; a sprinkler deluge system at each unit transformer, HTF expansion tank and circulating pump area; and

sprinkler systems at the STG and in the operations and administration buildings. Portable fire extinguishers of appropriate sizes and types will be located throughout the plant site.

Wastewater

The water balance diagram shows the wastewater streams and the disposition of wastewater (water treatment system effluent) discharging to evaporation ponds. As discussed previously, the cooling tower blowdown will be processed with various processes, including clarification and reverse osmosis, prior to reuse to make SCA washing and steam system makeup water. The reject water will be ultimately discharged to evaporation ponds for final dewatering. The residual solids will remain in the pond for the duration of the plant life, as discussed below.

Wastewater sources include the following:

- Reverse Osmosis/Demineralizer system wastewater, and
- General plant drains from the oil water separator.

Cooling System

Each of the power islands include two cooling systems; 1) the steam cycle heat rejection system (e.g., cooling tower) and, 2) the closed cooling water system (equipment cooling), each of which is discussed below.

Steam Cycle Heat Rejection System

The cooling system for heat rejection from the steam cycle consists of a surface condenser, circulating water system, and a wet cooling tower. The surface condenser receives exhaust steam from the low pressure section of the STG and condenses it to liquid for return to the SSG. The surface condenser is a shell-and-tube heat exchanger with wet, saturated steam condensing on the shell side and circulating water flowing through the tubes to provide cooling. The warmed circulating water exits the condenser and flows to the cooling tower to be cooled and reused.

The circulating water is distributed among multiple cells of the counter-flow cooling towers, where it cascades downward through each cell fill and then collects in the cooling tower basin. The mechanical draft cooling tower employs electric motor-driven fans to move air upward through each cooling tower cell fill. The cascading circulating water is partially evaporated, and the evaporated water is dispersed into the atmosphere as part of the moist air leaving each cooling tower cell. Because of climatic conditions at the site, visible moisture plumes are expected to occur relatively infrequently and mainly in winter months; therefore, no need is expected for a plume-abated cooling tower.

The circulating water is cooled primarily through partial evaporation, and secondarily through heat transfer with the air. The cooled circulating water is pumped from the cooling tower basin back to the surface condenser and auxiliary cooling water system.

Closed Cooling Water System

The closed cooling water system uses water from the cooling tower for the purpose of cooling equipment including the STG lubrication oil cooler, the STG generator cooler, steam cycle sample coolers, large pumps, etc. The water picks up heat from the various equipment items being cooled and rejects the heat to the cooling tower through a closed loop heat exchanger.

Waste Generation and Management

Project wastes include industrial wastewater, sanitary wastewater, non-hazardous solid waste, hazardous solid waste, and hazardous liquid waste.

Evaporation Ponds for Industrial Wastewater

It is expected that each Plant site will have two double-lined evaporation ponds with a nominal surface area of five acres each for a total of ten acres per site or twenty acres for the entire Project. The ponds will be designed in accordance with Lahontan Regional Water Quality Control Board (RWQCB) requirements. Multiple ponds are planned to allow plant operations to continue in event that a pond needs to be taken out of service for some reason, e.g., needed maintenance. Each pond will have enough surface area so that the evaporation rate exceeds the cooling tower blowdown rate at maximum design conditions and at annual average conditions. Pond depth will be selected so that the ponds will not need to have residual solids removed during the life of the plant.

The pond liner system is expected to consist of a 60 mil high density polyethylene (HDPE) inner liner and a 50 mil HDPE outer liner. Between the liners is a synthetic drainage net that is used as part of the leachate collection and removal system (LCRS). Monitoring of the evaporation ponds will be required to detect the presence of liquid and/or constituents of concern. The LCRS will be monitored and a series of monitoring wells will also be used for the evaporation ponds. Based on the power plant process, chemicals used, and water quality, it is expected that the constituents of concern for this monitoring will include chloride, sodium, sulfate, TDS, biphenyl, diphenyl oxide, potassium, selenium, chromium and phosphate. The proposed detection monitoring program for the facility consists of monitoring the LCRS, lysimeters, and monitoring wells for the presence of liquid and/or constituents of concern.

Septic System for Sanitary Wastewater

The Project's sanitary system will collect wastewater from sanitary facilities such as sinks and toilets. This waste stream will be sent to onsite sanitary waste septic systems located at each power island. A sanitary septic system and onsite leach field will be used to dispose of sanitary wastewater on each power island. Project cooling water blowdown will be piped to lined, onsite evaporation ponds for each plant area. The ponds will be sized to retain all solids generated during the life of the plant. However, if required for maintenance, dewatered residues from the ponds could be sent to an appropriate offsite landfill as non-hazardous waste.

On-Site Bioremediation/Land Farm System

The Project will include bioremediation/land farm units to treat soil contaminated with HTF in the event of a leak or spill. The proposed bioremediation and land farm facilities will cover an area of approximately 1.5 acres on each plant site. Appropriate contamination level for

bioremediation and land farming of site-specific soils will be determined by Lahontan-approved testing to ensure the adequacy of the bioremediation/land farm unit design for HTF-contaminated soil. Contaminated soil that exceeds this level will be disposed of at an appropriate waste facility.

The bioremediation/land farm area will be designed in accordance with Lahontan RWQCB requirements and will include a leak detection system and monitoring wells. Treatment in the bioremediation unit involves the addition of nitrogen and phosphorous (i.e., fertilizers) as nutrients to the HTF-contaminated soil to stimulate consumption of HTF by the indigenous bacteria. The soil will remain in the bioremediation/land farm unit until concentrations are reduced to appropriate levels for use as fill material on the site.

Other Non-Hazardous Solid Waste

Construction, operation and maintenance of the Project will generate non-hazardous solid wastes typical of power generation or other industrial facilities. These wastes include scrap metal and plastic, insulation material, paper, glass, empty containers, and other miscellaneous solid wastes. These materials will be disposed of by means of contracted refuse collection and recycling services.

Hazardous Solid and Liquid Waste

Small quantities of hazardous wastes will be generated during Project construction and operation. Hazardous wastes generated during the construction phase include substances such as paint and primer, thinners, and solvents. Hazardous solid and liquid waste streams generated during Project operations include substances such as used HTF, used hydraulic fluids, oils, greases, filters, etc., as well as spent cleaning solutions and spent batteries. To the extent possible, both construction and operation-phase hazardous wastes will be recycled.

Hazardous Materials Management

There will be a variety of hazardous materials used and stored during construction and operation of the Project, as summarized below. Hazardous materials that will be used during construction include gasoline, diesel fuel, oil, lubricants, and small quantities of solvents and paints. All hazardous materials used during construction and operation will be stored onsite in storage tanks/vessels/containers that are specifically designed for the characteristics of the materials to be stored; as appropriate, the storage facilities will include the necessary secondary containment in case of tank/vessel failure.

Carbon steel tanks will be used at each Plant site to store sodium hydroxide solution (7,500-gallon capacity), sulfuric acid (10,000-gallon capacity), and lube oil and diesel fuel (6,500-gallon capacity each). Secondary containment will be provided for these tanks

A variety of safety-related plans and programs will be developed and implemented to ensure safe handling, storage, and use of hazardous materials (e.g., Hazardous Material Business Plan). Plant personnel will be supplied with appropriate personal protective equipment (PPE) and will be properly trained in the use of PPE and the handling, use, and cleanup of hazardous materials

used at the facility, as well as procedures to be followed in the event of a leak or spill. Adequate supplies of appropriate cleanup materials will be stored onsite.

Project Civil/Structural Features

The following text describe civil/structural features of the Project. The Project will be designed in conformance with the current edition of the California Building Code criteria for seismic conditions as detailed in the Geotechnical Evaluation.

SSG System, STG and Associated Equipment

The SSG System, STG and condenser will be supported on reinforced-concrete mat foundations. The one step-up transformer and GSU will be supported on reinforced-concrete mat foundations. Balance-of-plant (BOP) mechanical and electrical equipment will be supported on individual reinforced-concrete pads. BOP components/materials include piping, valves, cables, switches, etc. are not included with major equipment and are generally installed or erected onsite.

Solar Array Support Structures

Each solar collector array will be supported by structures (pylons) that connect the parabolic troughs to the drive mechanism. Each array will be supported by multiple individual foundations. Foundation design will be based on site-specific geotechnical conditions to ensure that the solar array pylons are able to support all loading conditions (including wind loading) at the proposed Project site. Preliminary designs based on geotechnical and soils studies include pier foundations and spread footings.

Buildings

The Project will include a warehouse and control/admin building located in each power island. Solar collector array assembly buildings will be installed in the northeast portion of the Alpha solar field, which will be later converted to warehouses. Other plant site "buildings" will include the water treatment building, as well as a number of pre-engineered enclosures for mechanical and electrical equipment. Building columns will be supported on reinforced-concrete mat foundations or individual spread footings and the structures will rest on reinforced concrete slabs. The total square footage of the various proposed Project buildings and pre-engineered enclosures (e.g., control/admin building, warehouse, electrical equipment enclosures, etc.) is approximately 185,000 square feet for the entire Project.

Water Storage Tanks

There will be a number of covered water tanks on each site including a 1,930,000-gallon raw water storage tank for short-term backup cooling water supply, with a portion (360,000 gallons) dedicated to the plant's fire protection water system and a 1,930,000-gallon service water storage tank. There will also be a 164,500-gallon storage tank for storage of demineralized water. Water storage tanks will be vertical, cylindrical, field-erected steel tanks supported on foundations consisting of either a reinforced-concrete mat or a reinforced-concrete ring wall with an interior bearing layer of compacted sand supporting the tank bottom.

Roads, Fencing, Security

Only a small portion of the overall plant site will be paved, primarily the site access road and portions of the power island (paved parking lot and roads encircling the STG and SSG areas). In total, each power island will be approximately 20 acres with approximately 1.75 acres of paved area. The solar field will remain unpaved and without a gravel surface in order to prevent rock damage from SCA wash vehicle traffic. An approved dust suppression coating will be used on the dirt roadways within and around the solar field. Roads and parking areas located within the power island area and adjacent to the administration building and warehouse will be paved with asphalt and are included in the total above.

The Project solar field and support facilities' perimeter will be secured with chain-link metal-fabric fencing, six to eight feet tall. Controlled access gates will be located at the power island entrances and serve as normal access to the solar fields. Desert tortoise exclusion fencing will be installed at the base of the chain link fence and tortoise-proof gates will be utilized.

Natural Gas Supply

The natural gas pipeline to service the proposed Project exists in Harper Lake Road and interconnection will occur at the Project boundary; no offsite pipeline is required. Natural gas for the Project's ancillary purposes, such as the auxiliary boilers, space heating, and the like will be supplied by a Southwest Gas Corporation (SGC) owned pipeline that runs to the Project boundary near the Alpha power island. No offsite pipeline facilities are proposed as a part of this Project. SGC was contacted and studied the demand requested and indicates that sufficient capacity exists to supply the Project.

Existing Facilities

Southwest Gas Corporation (SGC) is the local service provider. The existing pipeline was installed to support the existing and previously planned SEGS projects at Harper Dry Lake. The line was sized to support up to six SEGS-style projects. Existing capacity is sufficient to support the minimal use of natural gas for this Project.

The interconnection will service both power islands independently. A pipeline will be installed within the Project boundary to support the Beta site power island from the interconnection location near the Alpha power island.

Proposed Onsite Routing

Starting at the tap station adjacent to the west side of the Alpha power island, the pipeline is routed underground to the Alpha power island metering and reducing station. A tee will be installed downstream the tap in the line to supply the Alpha power island and to route gas to the Beta power island. To supply the Beta power island an underground pipeline will be installed from the tee and extend west to a point north of the Beta power island, turn south and terminate at the Beta power island metering and reducing station. The total distance from the tee to the Beta metering and reducing station is approximately two miles.

Construction Practices

The natural gas pipeline will be constructed as part of the overall site construction. The pipeline will be installed in maintenance road right-of-ways to allow for future access if necessary. Prior to installation, the pipe will be laid along the route. Pipeline construction will take approximately one month and is expected to begin following the grubbing and clearing of the Project site and in coordination with mass grading. During non-work hours, the exposed trench will be covered with temporary coverings to provide safety. The pipe will have factory-applied corrosion protection coating. Joints will be welded and inspected using X-ray. The construction of the natural gas pipeline will consist of the following:

- *Trenching:* The optimal trench will be approximately 36 inches wide and four to ten feet deep. With loose soil, a trench up to eight feet wide at the top and three feet wide at the bottom may be required. The pipeline will be buried to provide a minimum cover of 36 inches. The excavated soil will be piled on one side of the trench and used for back filling after the pipe is installed.
- *Stringing:* Lengths of pipe are laid on wooden skids beside the open trench.
- *Installation:* This process consists of bending, welding, and coating the weld-joint areas of the pipe after it has been strung, padding the ditch with sand or fine spoil, and lowering the pipe string into the trench. Welding will meet the applicable standards and will be performed by qualified welders. Welds will be inspected in accordance with appropriate standards. Welds will undergo 100% inspection by an independent, qualified radiography contractor. All coating will be checked for defects and will be repaired before lowering the pipe into the trench.
- *Backfilling:* This process consists of returning spoil back into the trench around and on top of the pipe, ensuring that the surface is returned to its original grade or level. The backfill will be compacted to protect the stability of the pipe and to minimize subsequent subsidence.
- *Plating:* Consists of covering any open trench in areas of foot or vehicle traffic at the end of a workday. Plywood plates will be used in areas of foot or wildlife traffic and steel plates will be used in areas of vehicle crossing to ensure public safety. Plates will be removed at the start of each workday. Efforts will be made to minimize the length of open trench along the ROW.
- *Hydrostatic testing:* Consists of filling the pipeline with water, venting all air, increasing the pressure to the specified code requirements, and holding the pressure for a period of time. After hydrostatic testing, the test water will be chemically analyzed for contaminants and discharged to the surrounding area unless the analysis shows that the water is contaminated, in which case, the water will be trucked to an appropriate disposal facility.
- *Cleanup:* Consists of restoring the surface of the right-of-way by removing any construction debris, grading to the original grade and contour.

- *Commissioning:* consists of cleaning and drying the inside of the pipeline, purging air from the pipeline, and filling the pipeline with natural gas.

Metering

A gas-metering station will be required at the tap point to measure and record gas volumes. In addition, facilities will be installed to regulate the gas pressure and to remove any liquids or solid particles. The metering station at the tap point will require an area of approximately 5,000 square feet. In addition, the two plant metering sets will require a fenced enclosure of approximately 1,000 square feet.

Construction activities related to the metering station and metering sets will include grading a pad and installing above and below ground gas piping, metering equipment, gas conditioning, pressure regulation, and possibly pigging facilities. A distribution power line for metering-station-operation lighting, communication equipment, and perimeter chain link fencing for security will also be installed.

Operation

Isolation block valves will be installed at both ends of the pipeline. These valves will be manually controlled, lockable, gear-operated ball valves. A pipeline Supervisory Control and Data Acquisition (SCDA) system will provide flow rate and pressure data to SGC, the gas vendor, and pipeline owner. Communication with SGC or the gas vendor regarding pipeline operations will be by telephone lines or other means, such as Cellular Digital Pocket Data as appropriate.

AMSP Project Decommissioning

Although the AMSP is anticipated to operate for 30 years, it is possible that the facility could remain in operation for as many as 40 or more years. Possible reasons for closure could include, but would not be limited to, facility age, economic viability, cost of maintenance or upgrades, or damage considered beyond repair. Procedures for facility closure would largely depend on the circumstances and requirements at the time of decommissioning.

Facilities Closure

The AMSP is being designed for an operating life of 30 years. Depending on maintenance factors, at an appropriate point beyond the useful operating life, the project would cease operation and close. At that time, it would be necessary to ensure that closure occurs in a way that public health and safety and the environment are protected from adverse impacts.

Although the setting for this project does not appear to present any special or unusual closure circumstances, it is not possible to foresee what the situation would be in 30 years or more when the project ceases operation. Therefore, provisions would be made that provide the flexibility to address the circumstances at the time of closure. Facility closure would be consistent with laws, ordinances, regulations, and standards in effect at the time of closure.

Temporary closure is a cessation of facility operations for a period greater than would be required for routine maintenance, overhaul, or replacement of major plant equipment. Temporary closure could be initiated by damage to the facility resulting from events such as earthquakes, fires, or other natural occurrences, or due to short-term economic considerations. Permanent closure is a cessation of facility operations with no intent to restart. Permanent closure could result from a combination of facility age and economic considerations, from damage considered beyond repair, or for other reasons.

Temporary Closure

In the case of a temporary closure, AMSP would maintain round-the-clock security for the facilities and would notify the California Department of Environmental Quality (CDEQ) and other jurisdictional agencies. Depending on whether hazardous materials were released, a specific course of action would be followed, as outlined below.

A Risk Management and Mitigation Plan would be developed before operations began and would be implemented for the temporary halting of facility operations if there is no actual or threatened release of hazardous materials. The plan would ensure compliance with all applicable laws, ordinances, regulations, and standards and appropriate protection of public health, safety, and the environment. The plan could include draining and proper disposal of chemicals from storage tanks and other facility equipment, the safe shutdown of all plant equipment, and various other measures to protect equipment, onsite workers, the public, and the environment. Specific measures would depend on the expected duration and nature of the temporary closure. If the temporary closure did involve an actual or threatened release of hazardous materials to the environment, procedures would be developed and implemented, as provided for in a Hazardous Materials Business Plan. Procedures would include, but not be limited to, the following:

- Measures to control and ultimately prevent the continued release of hazardous materials
- Emergency response procedures to address the unique operating environment consistent with the nature of the temporary closure
- Training requirements for project personnel in hazardous material release response and control
- Requirements for notifying appropriate agencies and the public

All notifications and related actions would be conducted in accordance with the Emergency Planning and Community Right-To-Know Act. After the hazardous material release was resolved, temporary closure would proceed, corrective actions would be identified, and the Risk Management and Mitigation Plan would be followed.

Permanent Closure

If the AMSP remained economically viable, it could operate for 40 or more years, which would defer environmental impacts associated with closure and with the development of replacement power generating facilities. However, if the facility was no longer economically viable before useful life of equipment had expired, permanent closure could occur sooner.

A decommissioning plan outlining closure procedures would be developed and implemented, regardless of when permanent closure occurred. The decommissioning plan would be provided to the CDEQ and other jurisdictional agencies for review before permanent closure. The decommissioning plan would include procedures designed to ensure public health and safety, environmental protection, and compliance with applicable laws, ordinances, regulations, and standards. Abengoa Solar would maintain round-the-clock security for the AMSP during permanent closure activities until the facilities were determined safe without security.

Closure measures could range from extensive "mothballing" to the complete removal of equipment and other structures, depending on conditions at the time of closure. The decommissioning plan for the AMSP would address the following:

- Proposed decommissioning measures for all facilities constructed as part of the project
- Activities necessary for site restoration, if removal of all equipment and appurtenances was needed
- Provisions for recycling facility components, collection and disposal of hazardous wastes and resale of unused chemicals back to suppliers or other parties
- Decommissioning alternatives other than full restoration of the site
- Costs associated with the proposed decommissioning activities and the source of funds to implement these activities
- Conformance with applicable laws, ordinances, regulations, standards, and local/regional plans

DESIGN

	Stream	Flow (lb/hr)	Pressure (psia)	Temperature (°F)	Enthalpy (Btu/lb)	Enthalpy (MBtu/hr)	MW
**	1	12,382,553	420.6	561.2	241.5	2990.4	876.4
**	9	12,382,553	203	737.6	342.8	4244.7	1244.0
**	20	12,382,553	191	561.2	241.5	2990.4	876.4
	47	1,189,214	1515	421.9	400.0	475.7	139.4
	50	1,177,151	1495	715.3	1300.0	1530.3	448.5
	56	1,021,991	261.6	405	1191.1	1217.3	356.8
	58	1,021,991	246.7	715.3	1379.5	1409.8	413.2
	73	238	1495	715.3	1300.0	0.3	0.1
	80	11,746	1512	597.3	613.1	7.2	2.1
	82	11,746	174	370.3	343.3	4.0	1.2
	108	40,655,029	51.5	80.7	48.9	1988.0	582.6
	109	40,655,029	41.6	99.6	67.7	2752.3	806.6
	132	12,064	14.9	118	86.4	1.0	0.3

ANNUAL AVERAGE WHEN OPERATING

Stream	Flow (lb/hr)	Pressure (psia)	Temperature (°F)	Enthalpy (Btu/lb)	Enthalpy (MBtu/hr)	MW
1	7,271,044	125	521.6	211.1	1534.9	449.8
9	7,271,044	203	737.6	342.8	2492.5	730.5
20	7,271,044	196.5	521.6	211.1	1534.9	449.8
47	852,783	1109	395.1	370.8	316.2	92.7
50	844,371	1095	719.4	1331.6	1124.4	329.5
56	763,100	196.1	380.1	1195.5	912.3	267.4
58	763,100	184.9	720.3	1385.3	1057.1	309.8
73	238	1095	719.4	1331.6	0.3	0.1
80	8,413	1107.5	557.2	558.6	4.7	1.4
82	8,413	174	370.3	343.3	2.9	0.8
108	40,655,029	51.5	79.6	47.9	1947.4	570.7
109	40,655,029	41.6	94.1	62.3	2532.8	742.3
132	8,651	14.9	118	86.4	0.7	0.2

Stream	DESIGN Energy MW	ANNUAL AVG Energy MW
H1	140.0	105.0
H2	4.80	4.80
H3	2.49	1.82

Stream	DESIGN Energy Mbtu/hr	ANNUAL AVG Energy Mbtu/hr
H1	477.7	358.3
H2	16.38	16.38
H3	8.50	6.20

* REPRESENTS MULTIPLE STREAMS, SEE WATER BALANCE (FIGURE 2–8)
** HEAT TRANSFER FLUID

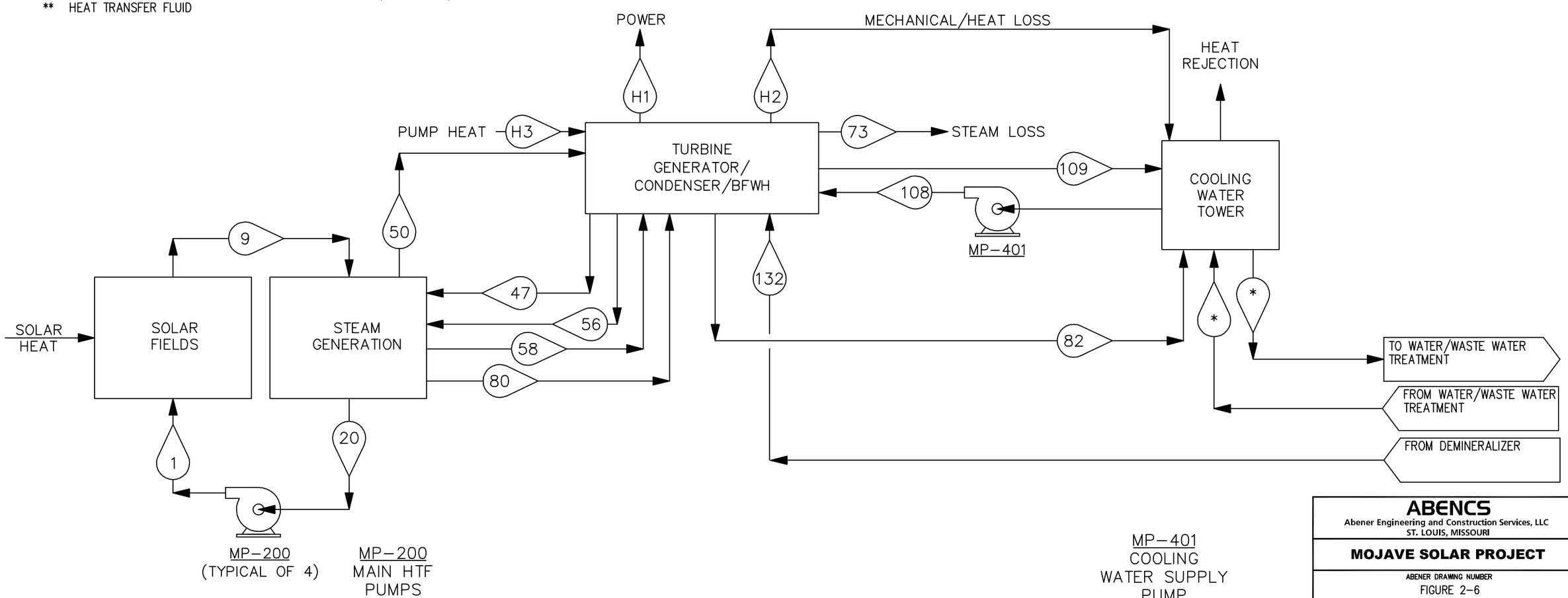

ABENCS
Abener Engineering and Construction Services, LLC
ST. LOUIS, MISSOURI

MOJAVE SOLAR PROJECT

ABENER DRAWING NUMBER
FIGURE 2–6

MASS AND ENERGY BALANCE PER PLANT

HARPER LAKE, CA

	BY	DATE	APP'D.	DATE	JOB NO.	REVISION
DRAWN					120010	
CHECKED					DRAWING NO. MD–F001	C
SCALE	NONE					

REVISIONS: NO. | DATE | DESCRIPTION | BY | BY | BY

REFERENCES: DESCRIPTION

THIS DRAWING IS THE PROPERTY OF ABENCS Abener Engineering and Construction Services, LLC. INFORMATION AND KNOWHOW HEREON ARE CONFIDENTIAL AND PROPRIETARY AND MAY NOT BE USED, REPRODUCED, OR REVEALED TO OTHERS EXCEPT IN ACCORDANCE WITH THE TERMS OF A CONTRACT WITH OR OTHER WRITTEN PERMISSION OF Abener Engineering and Construction Services, LLC. ANY REPRODUCTIONS IN WHOLE OR PART INCLUDING SHOP DRAWINGS SHALL BEAR OR REFER TO THIS STAMP.

ISSUE DATE | PURPOSE OF ISSUE: PRELIMINARY

Plot Date/Time/User: 18–Jul–09/9:08 AM/MJESDE

P:\PROJECTS\120010 ABSOLAR HARPER LAKE CALIFORNIA\PERMIT PROPOSAL\ISSUED TO CUSTOMER 2009\OVERALL MFD MD–F001.DWG

SYMBOLS (ON ONE-LINES)	DESCRIPTION
	DISCONNECT SWITCH
	FUSED DISCONNECT SWITCH
	FUSED CUTOUT SWITCH
	HORN GAP ISOLATING SWITCH
	LOW VOLTAGE CIRCUIT BREAKER DRAWOUT TYPE
	LOW VOLTAGE CIRCUIT BREAKER
	MEDIUM VOLTAGE CIRCUIT BREAKER DRAWOUT TYPE
	TRANSMISSION LINE CIRCUIT BREAKER
*	AC MOTOR (*) HORSEPOWER
GEN	GENERATOR
DG	DIESEL GENERATOR
LA	LIGHTNING ARRESTOR
	EARTH SWITCH
	DISTRIBUTION PANEL (DCP, DP, HTP, IPP, LP, PP, UPSP)

SYMBOLS (ON ONE-LINES)	DESCRIPTION
	ELECTRIC HEATER ELEMENT
	POTHEAD OR SERVICE HEAD
	PLUG-IN CONNECTOR OR DISCONNECTING DEVICE
*	POWER FACTOR CORRECTION CAPACITOR * RATING IN KVAR
R	FIXED RESISTOR
R	TAPPED RESISTOR
R	ADJUSTABLE RESISTOR
*	SINGLE OR THREE PHASE POWER TRANSFORMER (*) KVA AND VOLTAGE RATING
*	SINGLE OR THREE PHASE POWER TRANSFORMER WITH LOAD TAP CHANGER (*) KVA AND VOLTAGE RATING
** *	PT- POTENTAL TRANSFORMER (*) VOLTAGE LEVEL (**) QUANTITY
*	INDUCTIVE REACTOR (*) RATING IN KVA AND IMPEDANCE IN
* ■ **	CURRENT TRANSFORMER ■ POLARITY MARK (*) RATIO (**) QUANTITY
* **	ZERO SEQUENCE CURRENT TRANSFORMER (*) RATIO (**) QUANTITY
R	– NEUTRAL GROUNDING TRANSFORMER W/SECONDARY LOADING RESISTOR
*	PROTECTIVE RELAY (*) TYPE OF RELAY
	BUS DUCT

SYMBOLS (ON ONE-LINES)	DESCRIPTION
*	LOW VOLTAGE COMBINATION STARTER (*) NEMA SIZE
	MEDIUM VOLTAGE STARTER WITH VACUUM CONTACTOR
	VACUUM CONTACTOR
L	LATCHING VACUUM CONTACTOR
S	SYNCHRONIZING BREAKER
M	MOTOR OPERATOR
SSM	SOLID STATE METERING
SS CP	SOLID STATE CIRCUIT PROTECTOR/MULTI-FUNCTION RELAY
STU	STATIC TRIP UNIT
SS MCP	SOLID STATE MOTOR CIRCUIT PROTECTOR
VSD	VARIABLE SPEED DRIVE
SS	SOFT START
A-# L-O	= KIRK KEY INTERLOCK A-# KEY INTERCHANGE NUMBER L-O LOCK DEVICE OPEN E INTERLOCK BOLT EXTENDED
A 1	= KIRK KEY

SYMBOLS (ON ONE-LINES)	DESCRIPTION
XX/YY ZZZZ	PROTECTIVE RELAY XX,YY – ANSI STANDARD DEVICE FUNCTION NUMBER ZZZZ – RELAY NUMBER IDENTIFICATION
	ANSI STANDARD DEVICE FUNCTIONS
25	SYNCHRONISM CHECK DEVICE
27	UNDERVOLTAGE RELAY
32	DIRECTIONAL POWER RELAY
40	FIELD RELAY
43	MANUAL TRANSFER DEVICE
46NC	PHASE-BALANCE NEUTRAL CURRENT RELAY
49X	MACHINE OR TRANSFORMER THERMAL RELAY (X= M-MACHINE, T-TRANSFORMER, T1- TRANSFORMER 1 WINDING, T2- TRANSFORMER 2 WINDING, T3- TRANSFORMER 3 WINDING)
50	INSTANTANEOUS OVERCURRENT RELAY
51	AC TIME-OVERCURRENT RELAY
50/51N	RESIDUAL GROUND FAULT RELAY
51TN	TRANSFORMER NEUTRAL TIME-OVERCURRENT RELAY
51G	GROUND TIME OVERCURRENT RELAY
51GS	ZERO SEQUENCE GROUND TIME-OVERCURRENT RELAY
51V	VOLTAGE-RESTRAINED OVERCURRENT RELAY
59	OVERVOLTAGE RELAY
59NC	UNBALANCED NEUTRAL OVERVOLTAGE RELAY
63X	PRESSURE SWITCH (X= T- TRANSFORMER, TCX- TAP CHANGER X ENCLOSURE TCY- TAP CHANGER Y ENCLOSURE)
67	AC DIRECTIONAL OVERCURRENT RELAY
71	LEVEL SWITCH
81	FREQUENCY RELAY
86X	LOCK-OUT RELAY (X = B-BUS, C-CAPACITOR, F-FEEDER, G-GENERATOR, T-TRANSFORMER)
87X	DIFFERENTIAL PROTECTIVE RELAY (X = B-BUS, F-FEEDER, G-GENERATOR, T-TRANSFORMER, TL – TRANSMISSION LINE)
11X	MULTIPURPOSE RELAY (X = B-BUS, F-FEEDER, G-GENERATOR, T-TRANSFORMER, TL – TRANSMISSION LINE)

PRELIMINARY

DATE 17FEB 09

Figure 2-7(a)

REFERENCES

DESCRIPTION

THIS DRAWING IS THE PROPERTY OF
ABENCS
Abener Engineering and Construction Services, LLC
INFORMATION AND KNOW-HOW HEREON ARE CONFIDENTIAL AND PROPRIETARY AND MAY NOT BE USED, REPRODUCED, OR REVEALED TO OTHERS EXCEPT IN ACCORDANCE WITH THE TERMS OF A CONTRACT WITH OR OTHER WRITTEN PERMISSION OF Abener Engineering and Construction Services, LLC. ANY REPRODUCTIONS IN WHOLE OR PART INCLUDING SHOP DRAWINGS SHALL BEAR OR REFER TO THIS STAMP.

ISSUE DATE	PURPOSE OF ISSUE
17 FEB09	FOR REVIEW

ABENCS
Abener Engineering and Construction Services, LLC
ST. LOUIS, MISSOURI

ABENGOA SOLAR

ABENER DRAWING NUMBER
XXXX-PLN-BBB-28-21-0001

ELECTRICAL ONE LINE DIAGRAM
SYMBOLS LIST

ABENGOA SOLAR — HARPER LAKE, CA

	BY	DATE	APP'D.	DATE	JOB NO.	REVISION
DRAWN	MKB	2/09	GDT	17 FEB09	120010	
CHECKED	SDE	17 FEB09			DRAWING NO. ED-0001	
SCALE	NONE					

Plot Date/Time/User: 17-Feb-09/3:31 PM/CGMBU

P:\PROJECTS\120010 ABSOLAR HARPER LAKE CALIFORNIA\CAD120010\ELECTRICAL\ED-0001.DWG

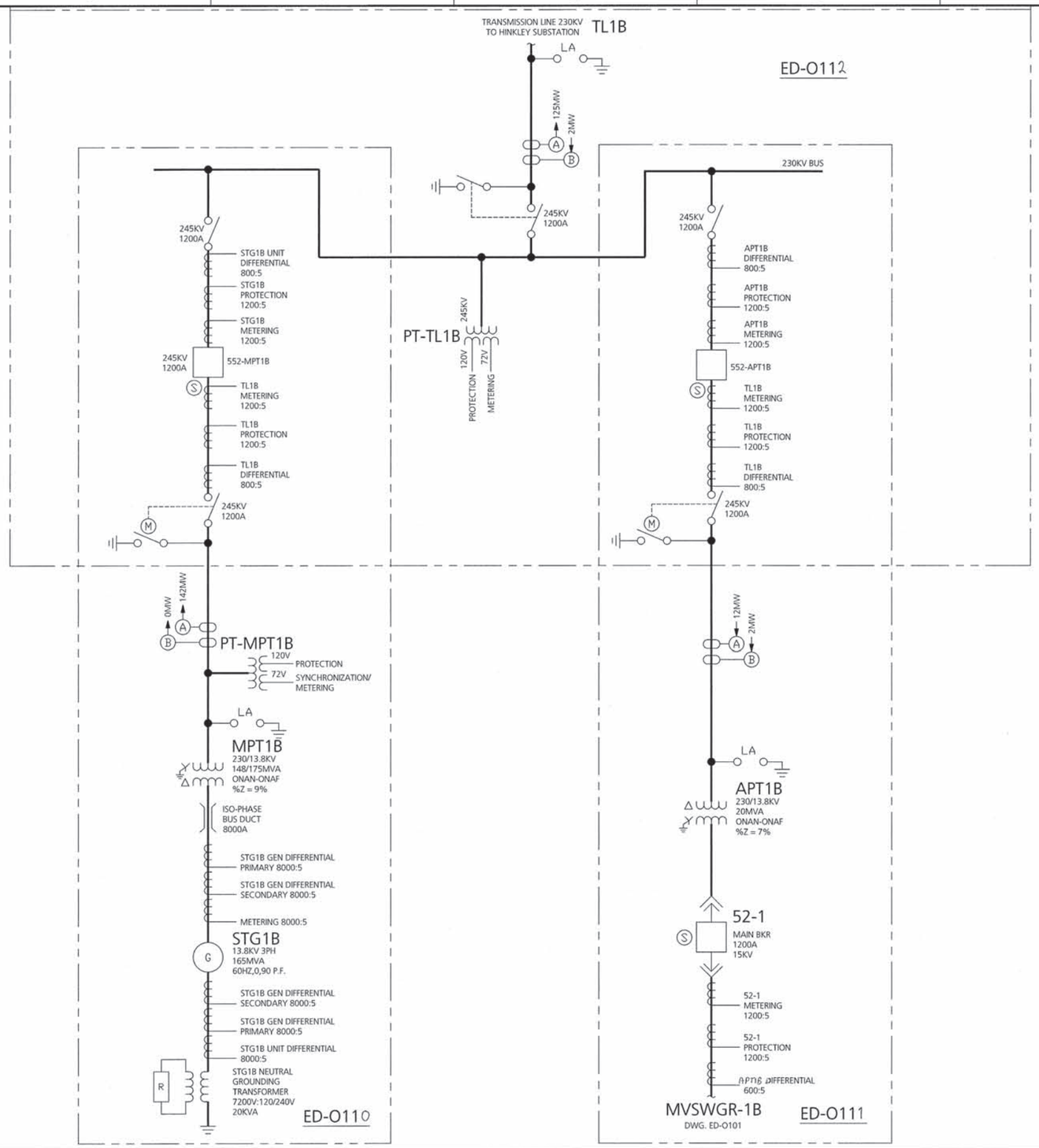

NOTES:

1. ADDITIONAL COMPONENTS FOR METERING AND PROTECTION WILL BE PROVIDED DURING DETAIL DESIGN.
2. ALPHA SITE HAS PRIMARY EQUIPMENT DESIGNATIONS. BETA SITE SEONDARY EQUIPMENT DESIGNATIONS AND ARE IN PARENTHESIS (####)

SYMBOLS

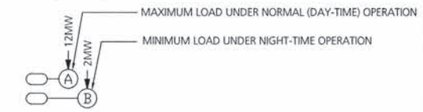

Figure 2-7(g)

PRELIMINARY

DATE 17 FEB 09

ABENCS
Abener Engineering and Construction Services, LLC
ST. LOUIS, MISSOURI

ABENGOA SOLAR

ABENER DRAWING NUMBER
XXXX-PLN-BBB-28-21-0109

230KV METERING & RELAYING PROTECTION ZONE ONE LINE BETA SITE

ABENGOA SOLAR — HARPER LAKE, CA

	BY	DATE	APP'D.	DATE	JOB NO.	REVISION
DRAWN	MKB	2/09	GBT	17 FEB 09	120010	
CHECKED					DRAWING NO. ED-0109	
SCALE	NONE					

NO.	DATE	DESCRIPTION	BY	BY	BY

REVISIONS

REFERENCES

THIS DRAWING IS THE PROPERTY OF
ABENCS
Abener Engineering and Construction Services, LLC
INFORMATION AND KNOW-HOW HEREON ARE CONFIDENTIAL AND PROPRIETARY AND MAY NOT BE USED, REPRODUCED, OR REVEALED TO OTHERS EXCEPT IN ACCORDANCE WITH THE TERMS OF A CONTRACT WITH OR OTHER WRITTEN PERMISSION OF Abener Engineering and Construction Services, LLC. ANY REPRODUCTIONS IN WHOLE OR PART INCLUDING SHOP DRAWINGS SHALL BEAR OR REFER TO THIS STAMP.

17 FEB 09	FOR REVIEW
ISSUE DATE	PURPOSE OF ISSUE

Plot Date/Time/User: 17-Feb-09/1:48 PM/CGMBU

P:\PROJECTS\120010 ABSOLAR HARPER LAKE CALIFORNIA\CAD120010\ELECTRICAL\ED-0109.DWG

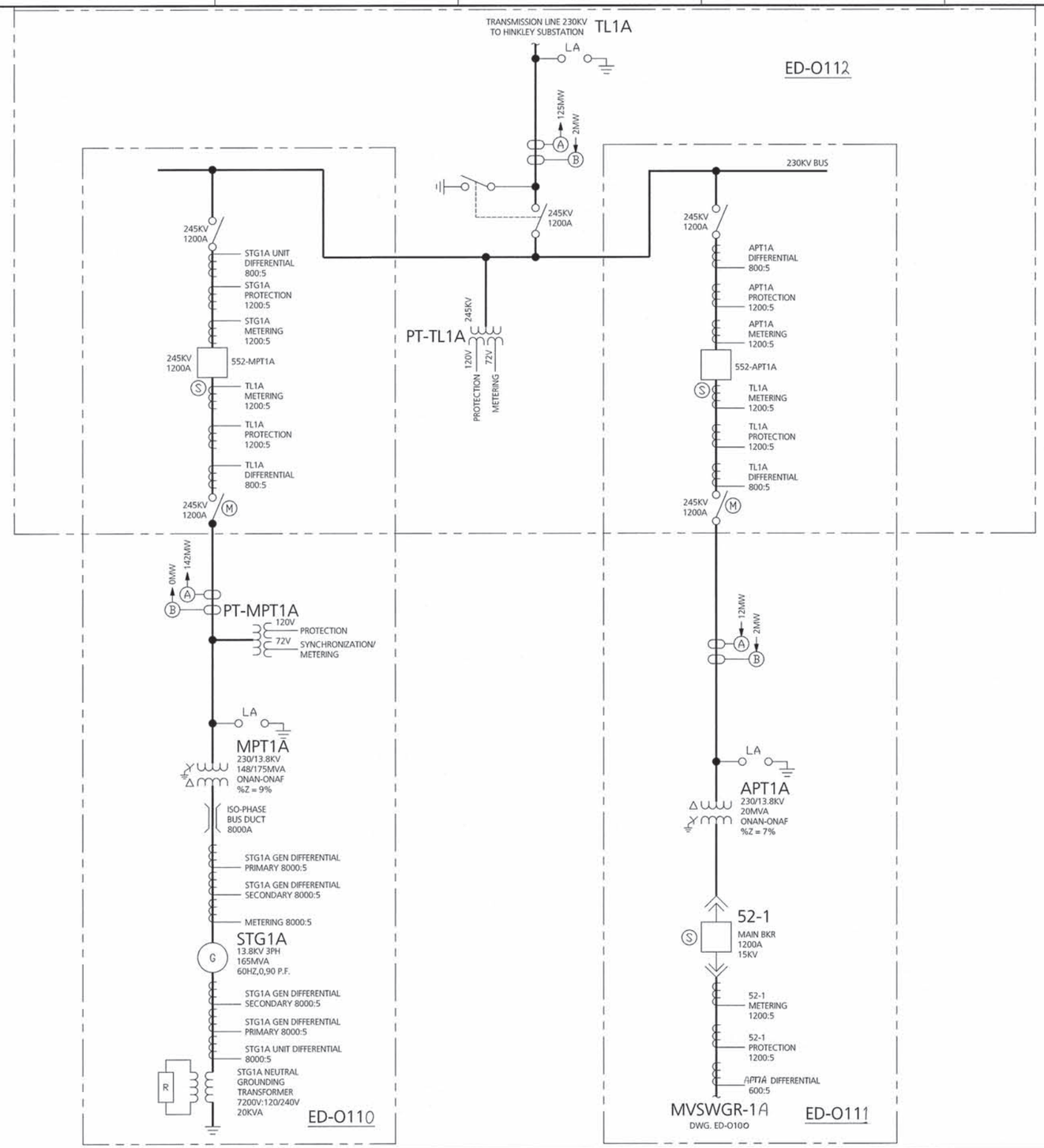

NOTES:

1. ADDITIONAL COMPONENTS FOR METERING AND PROTECTION WILL BE PROVIDED DURING DETAIL DESIGN.
2. ALPHA SITE HAS PRIMARY EQUIPMENT DESIGNATIONS. BETA SITE SEONDARY EQUIPMENT DESIGNATIONS AND ARE IN PARENTHESIS (####)

SYMBOLS

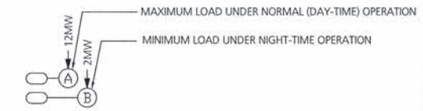

PRELIMINARY

DATE 16 FEB 09

Figure 2-7(f)

ABENCS
Abener Engineering and Construction Services, LLC
ST. LOUIS, MISSOURI

ABENGOA SOLAR

ABENER DRAWING NUMBER
XXXX-PLN-BBB-28-21-0108

230KV METERING & RELAYING PROTECTION ZONE ONE LINE ALPHA SITE

ABENGOA SOLAR — HARPER LAKE, CA

	BY	DATE	APP'D.	DATE	JOB NO.	REVISION
DRAWN	MKB	2/09	GDT	17 FEB 09	120010	
CHECKED					DRAWING NO. ED-0108	
SCALE	NONE					

NO.	DATE	DESCRIPTION	BY	BY	BY

REVISIONS

REFERENCES

THIS DRAWING IS THE PROPERTY OF
ABENCS
Abener Engineering and Construction Services, LLC
INFORMATION AND KNOW-HOW HEREON ARE CONFIDENTIAL AND PROPRIETARY AND MAY NOT BE USED, REPRODUCED, OR REVEALED TO OTHERS EXCEPT IN ACCORDANCE WITH THE TERMS OF A CONTRACT WITH OR OTHER WRITTEN PERMISSION OF Abener Engineering and Construction Services, LLC. ANY REPRODUCTIONS IN WHOLE OR PART INCLUDING SHOP DRAWINGS SHALL BEAR OR REFER TO THIS STAMP.

ISSUE DATE	PURPOSE OF ISSUE
16 FEB 09	FOR REVIEW

Plot Date/Time/User: 17-Feb-09/12:30 PM/CGMBU

P:\PROJECTS\120010 ABSOLAR HARPER LAKE CALIFORNIA\CAD120010\ELECTRICAL\ED-0108.DWG

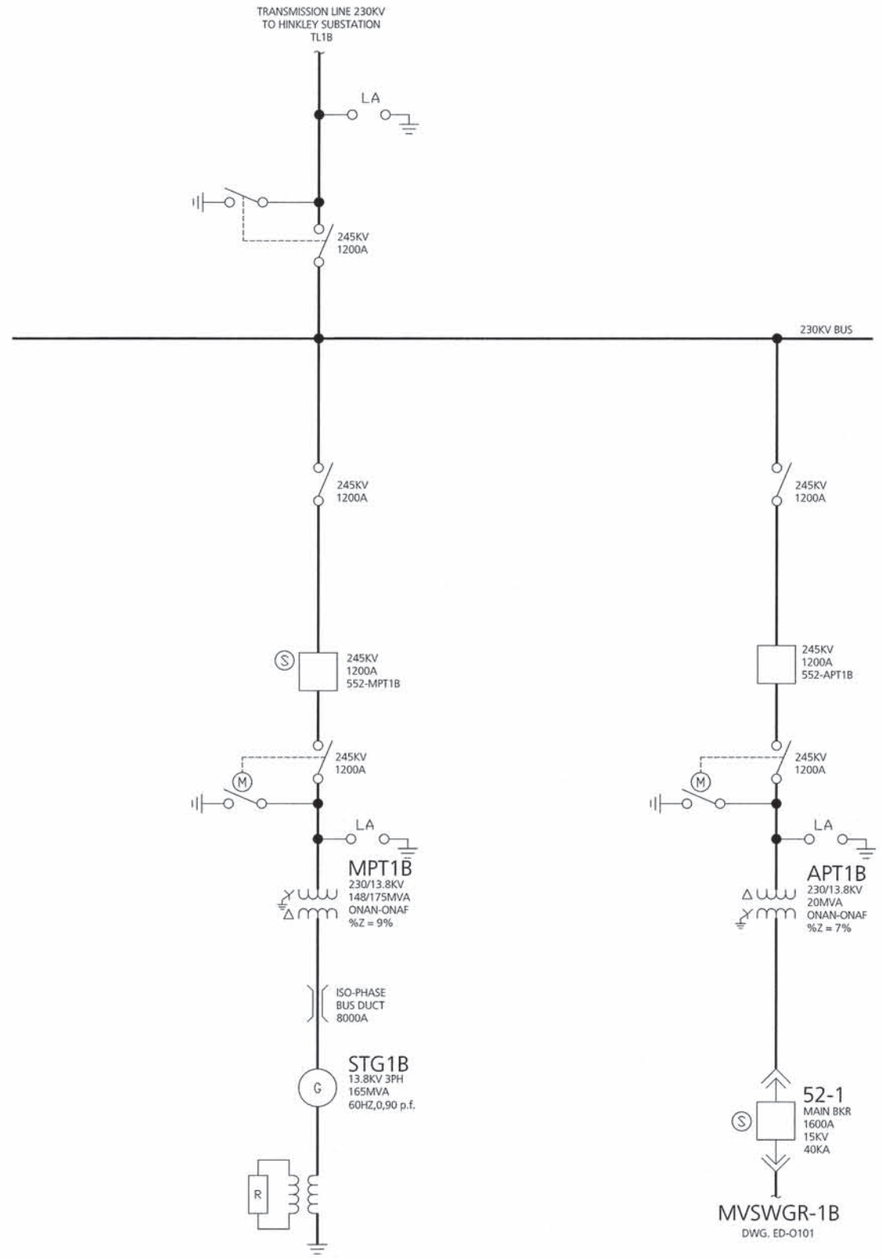

Figure 2-7(e)

NOTES:

1. ADDITIONAL COMPONETS FOR METERING AND PROTECTION WILL BE PROVIDED DURING DETAIL DESIGN.

PRELIMINARY

DATE 16 FEB 09

ABENCS
Abener Engineering and Construction Services, LLC
ST. LOUIS, MISSOURI

ABENGOA SOLAR

ABENER DRAWING NUMBER
XXXX-PLN-BBB-28-21-0106

GENERAL ONE-LINE DIAGRAM
230KV SUBSTATION
BETA SITE

ABENGOA SOLAR — HARPER LAKE, CA

	BY	DATE	APP'D.	DATE	JOB NO.	REVISION
DRAWN	MKB	2/09	GDT	17 FEB 09	120006	
CHECKED	SDE	17 FEB 09			DRAWING NO. ED-0106	D-29
SCALE	NONE					

THIS DRAWING IS THE PROPERTY OF
ABENCS
Abener Engineering and Construction Services, LLC
INFORMATION AND KNOW-HOW HEREON ARE CONFIDENTIAL AND PROPRIETARY AND MAY NOT BE USED, REPRODUCED, OR REVEALED TO OTHERS EXCEPT IN ACCORDANCE WITH THE TERMS OF A CONTRACT WITH OR OTHER WRITTEN PERMISSION OF Abener Engineering and Construction Services, LLC. ANY REPRODUCTIONS IN WHOLE OR PART INCLUDING SHOP DRAWINGS SHALL BEAR OR REFER TO THIS STAMP.

ISSUE DATE	PURPOSE OF ISSUE
16 FEB 09	FOR REVIEW

REVISIONS

NO.	DATE	DESCRIPTION	BY	BY	BY

REFERENCES

DESCRIPTION

Plot Date/Time/User: 16-Feb-09/12:27 PM/KAWEAVE

P:\PROJECTS\120010 ABSOLAR HARPER LAKE CALIFORNIA\CAD120010\ELECTRICAL\ED-0106.DWG

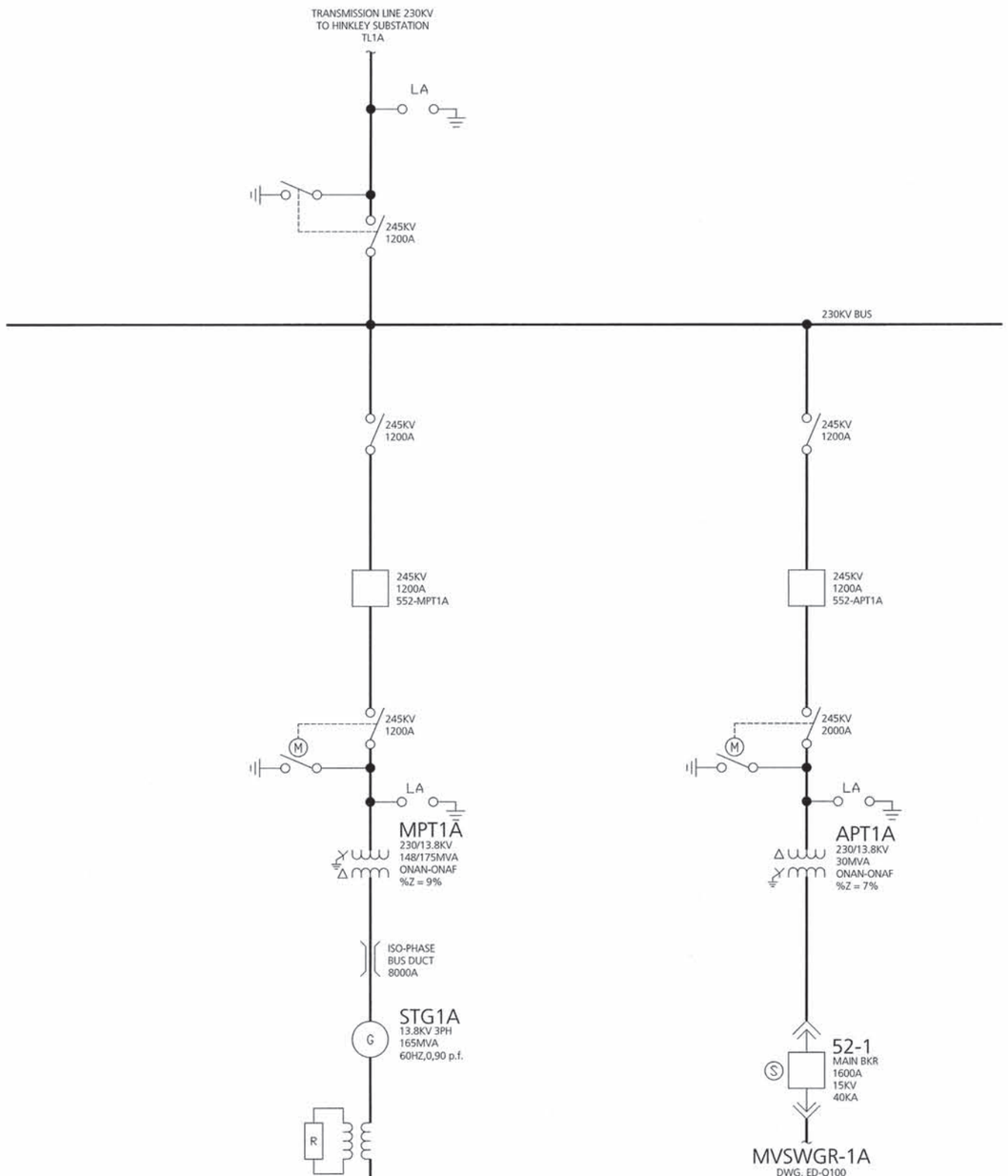

Figure 2-7(d)

NOTES:

1. ADDITIONAL COMPONETS FOR METERING AND PROTECTION WILL BE PROVIDED DURING DETAIL DESIGN.

PRELIMINARY

DATE 16 FEB 09

ABENCS
Abener Engineering and Construction Services, LLC
ST. LOUIS, MISSOURI

ABENGOA SOLAR

ABENER DRAWING NUMBER
XXXX-PLN-BBB-28-21-0105

GENERAL ONE-LINE DIAGRAM
230KV SUBSTATION
ALPHA SITE

ABENGOA SOLAR — HARPER LAKE, CA

	BY	DATE	APP'D.	DATE	JOB NO.	REVISION
DRAWN	MKB	2/09	GDT	17 FEB 09	120010	
CHECKED					DRAWING NO.	
SCALE	NONE				ED-0105	

REVISIONS: NO. | DATE | DESCRIPTION | BY | BY | BY

REFERENCES: DESCRIPTION

THIS DRAWING IS THE PROPERTY OF
ABENCS
Abener Engineering and Construction Services, LLC
INFORMATION AND KNOW-HOW HEREON ARE CONFIDENTIAL AND PROPRIETARY AND MAY NOT BE USED, REPRODUCED, OR REVEALED TO OTHERS EXCEPT IN ACCORDANCE WITH THE TERMS OF A CONTRACT WITH OR OTHER WRITTEN PERMISSION OF Abener Engineering and Construction Services, LLC. ANY REPRODUCTIONS IN WHOLE OR PART INCLUDING SHOP DRAWINGS SHALL BEAR OR REFER TO THIS STAMP.

16 FEB 09 — FOR REVIEW
ISSUE DATE — PURPOSE OF ISSUE

Plot Date/Time/User: 16-Feb-09/12:27 PM/KAWEAVE

P:\PROJECTS\120010 ABSOLAR HARPER LAKE CALIFORNIA\CAD120010\ELECTRICAL\ED-0105.DWG

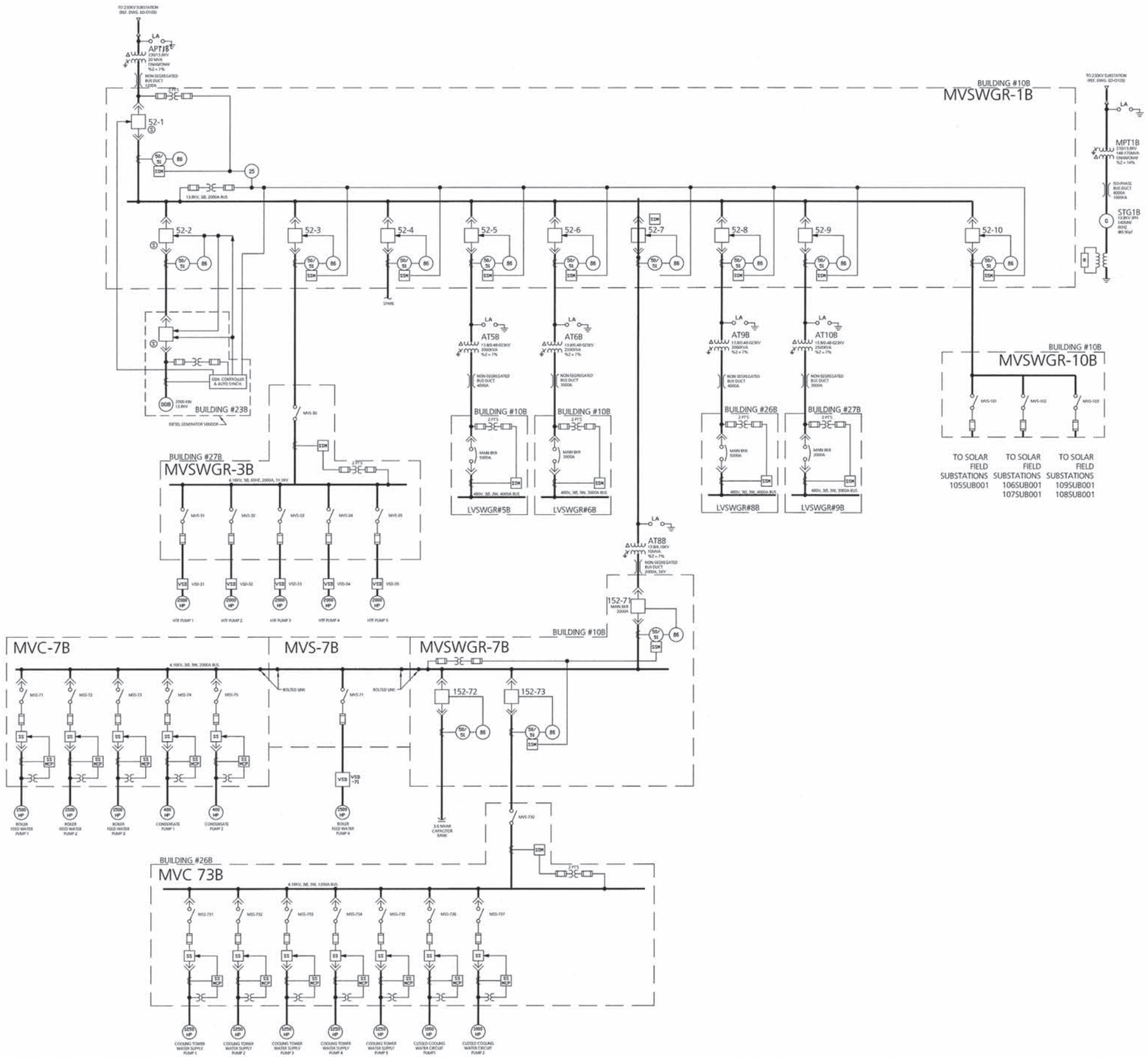

PRELIMINARY

DATE 16 FEB 09

Figure 2-7(c)

ABENCS

Abener Engineering and Construction Services, LLC
ST. LOUIS, MISSOURI

ABENGOA SOLAR

ABENER DRAWING NUMBER
XXXX-PLN-BBB-28-21-0101

GENERAL ONE-LINE DIAGRAM
BETA SITE

ABENGOA SOLAR — HARPER LAKE, CA

	BY	DATE	APP'D.	DATE	JOB NO.	REVISION
DRAWN	M.K.B.	2/09	GBT	17 FEB 09	120010	
CHECKED					DRAWING NO.	
SCALE	NONE				ED-0101	

NO.	DATE	DESCRIPTION	BY	BY	BY

REVISIONS

REFERENCES

DESCRIPTION

16 FEB 09 — ISSUE DATE
FOR REVIEW — PURPOSE OF ISSUE

THIS DRAWING IS THE PROPERTY OF
ABENCS
Abener Engineering and Construction Services, LLC
INFORMATION AND KNOW-HOW HEREON ARE CONFIDENTIAL AND PROPRIETARY AND MAY NOT BE USED, REPRODUCED, OR REVEALED TO OTHERS EXCEPT IN ACCORDANCE WITH THE TERMS OF A CONTRACT WITH OR OTHER WRITTEN PERMISSION OF Abener Engineering and Construction Services, LLC. ANY REPRODUCTIONS IN WHOLE OR PART INCLUDING SHOP DRAWINGS SHALL BEAR OR REFER TO THIS STAMP.

Plot Date/Time/User: 16-Feb-09/12:27 PM/KAWEAVE

P:\PROJECTS\120010 ABSOLAR HARPER LAKE CALIFORNIA\CAD120010\ELECTRICAL\ED-0101.DWG

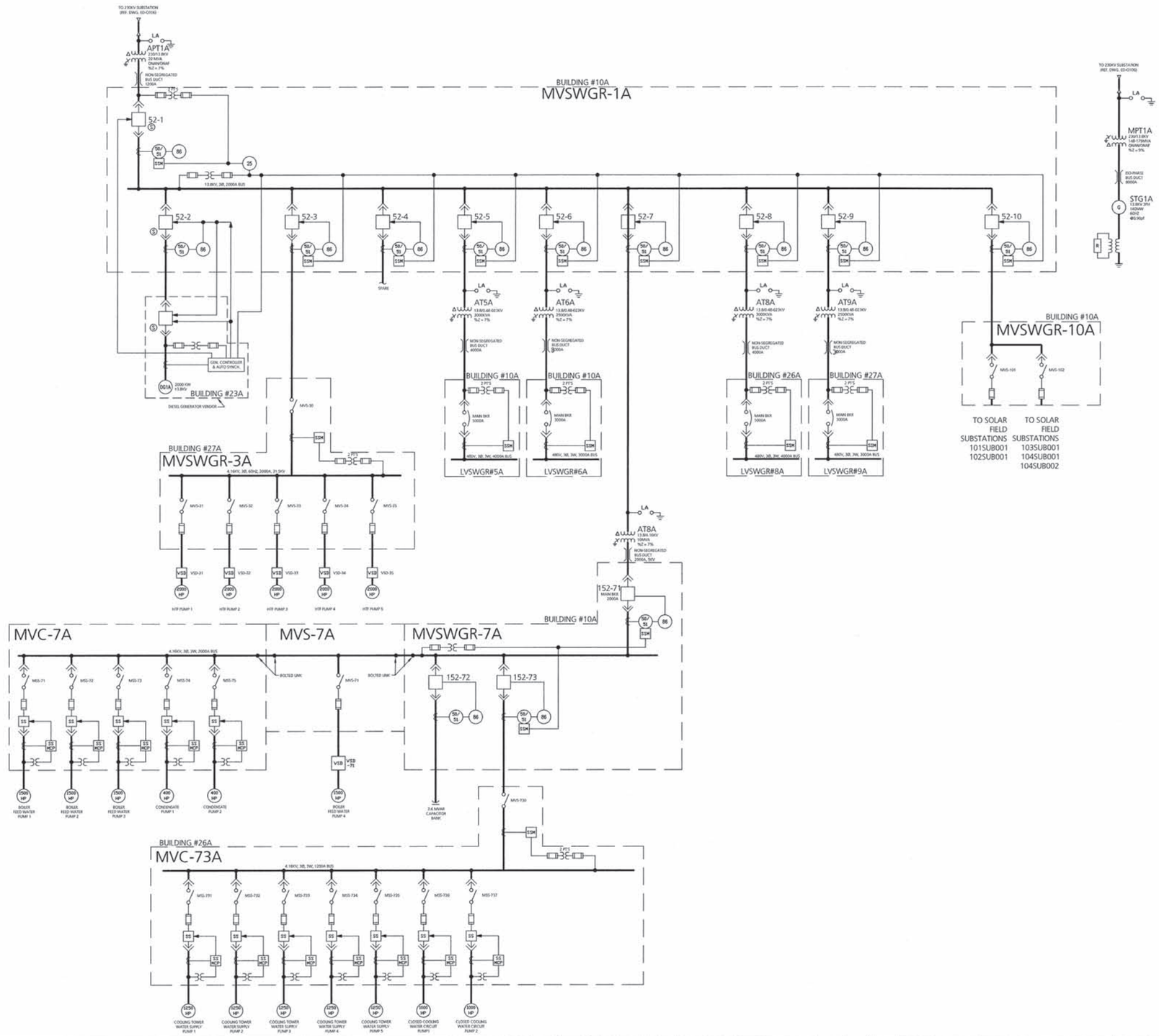

PRELIMINARY

DATE 16 FEB 09

Figure 2-7(b)

ABENCS

Abener Engineering and Construction Services, LLC
ST. LOUIS, MISSOURI

ABENGOA SOLAR

ABENER DRAWING NUMBER
XXXX-PLN-BBB-28-21-0100

GENERAL ONE-LINE DIAGRAM
ALPHA SITE

ABENGOA SOLAR — HARPER LAKE, CA

	BY	DATE	APP'D.	DATE	JOB NO.	REVISION
DRAWN	MKB	2/09	GDT	17 FEB 09	120010	
CHECKED					DRAWING NO.	
SCALE	NONE				ED-0100	

REVISIONS					
NO.	DATE	DESCRIPTION	BY	BY	BY

REFERENCES	
DESCRIPTION	

THIS DRAWING IS THE PROPERTY OF
ABENCS
Abener Engineering and Construction Services, LLC
INFORMATION AND KNOW-HOW HEREON ARE CONFIDENTIAL AND PROPRIETARY AND MAY NOT BE USED, REPRODUCED, OR REVEALED TO OTHERS EXCEPT IN ACCORDANCE WITH THE TERMS OF A CONTRACT WITH OR OTHER WRITTEN PERMISSION OF Abener Engineering and Construction Services, LLC. ANY REPRODUCTIONS IN WHOLE OR PART INCLUDING SHOP DRAWINGS SHALL BEAR OR REFER TO THIS STAMP.

ISSUE DATE	PURPOSE OF ISSUE
16 FEB 09	FOR REVIEW

Plot Date/Time/User: 16-Feb-09/12:27 PM/KAWEAVE

P:\PROJECTS\120010 ABSOLAR HARPER LAKE CALIFORNIA\CAD120010\ELECTRICAL\ED-0100.DWG

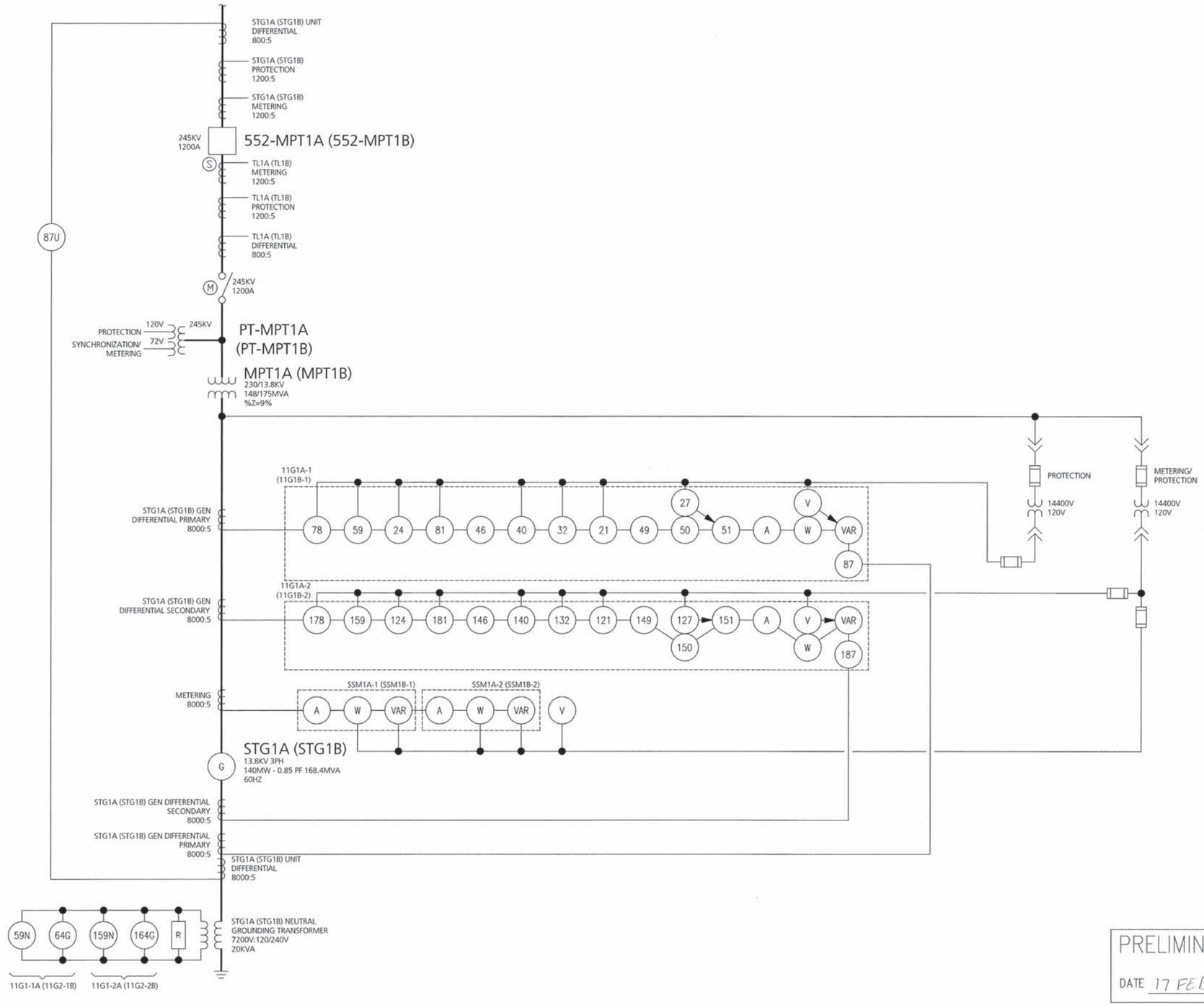

Figure 2-7(h)

PRELIMINARY

DATE 17 FEB 09

ABENCS
Abener Engineering and Construction Services, LLC
ST. LOUIS, MISSOURI

ABENGOA SOLAR

ABENER DRAWING NUMBER
XXXX-PLN-BBB-28-21-0110

230KV METERING & RELAYING
ONE LINE – STG1A (STG1B)
ALPHA (BETA) SITE

ABENGOA SOLAR — HARPER LAKE, CA

	BY	DATE	APP'D.	DATE	JOB NO.	REVISION
DRAWN	MKB	2/09	GDT	17 FEB 09	120010	
CHECKED					DRAWING NO.	
SCALE	NONE				ED-0110	

NO.	DATE	DESCRIPTION	BY	BY	BY

REVISIONS

REFERENCES

THIS DRAWING IS THE PROPERTY OF
ABENCS
Abener Engineering and Construction Services, LLC
INFORMATION AND KNOW-HOW HEREON ARE CONFIDENTIAL AND PROPRIETARY AND MAY NOT BE USED, REPRODUCED, OR REVEALED TO OTHERS EXCEPT IN ACCORDANCE WITH THE TERMS OF A CONTRACT WITH OR OTHER WRITTEN PERMISSION OF Abener Engineering and Construction Services, LLC. ANY REPRODUCTIONS IN WHOLE OR PART INCLUDING SHOP DRAWINGS SHALL BEAR OR REFER TO THIS STAMP.

17 FEB 09 — ISSUE DATE
FOR REVIEW — PURPOSE OF ISSUE

Plot Date/Time/User: 17-Feb-09/12:31 PM/CGMBU

P:\PROJECTS\120010 ABSOLAR HARPER LAKE CALIFORNIA\CAD120010\ELECTRICAL\ED-0110.DWG

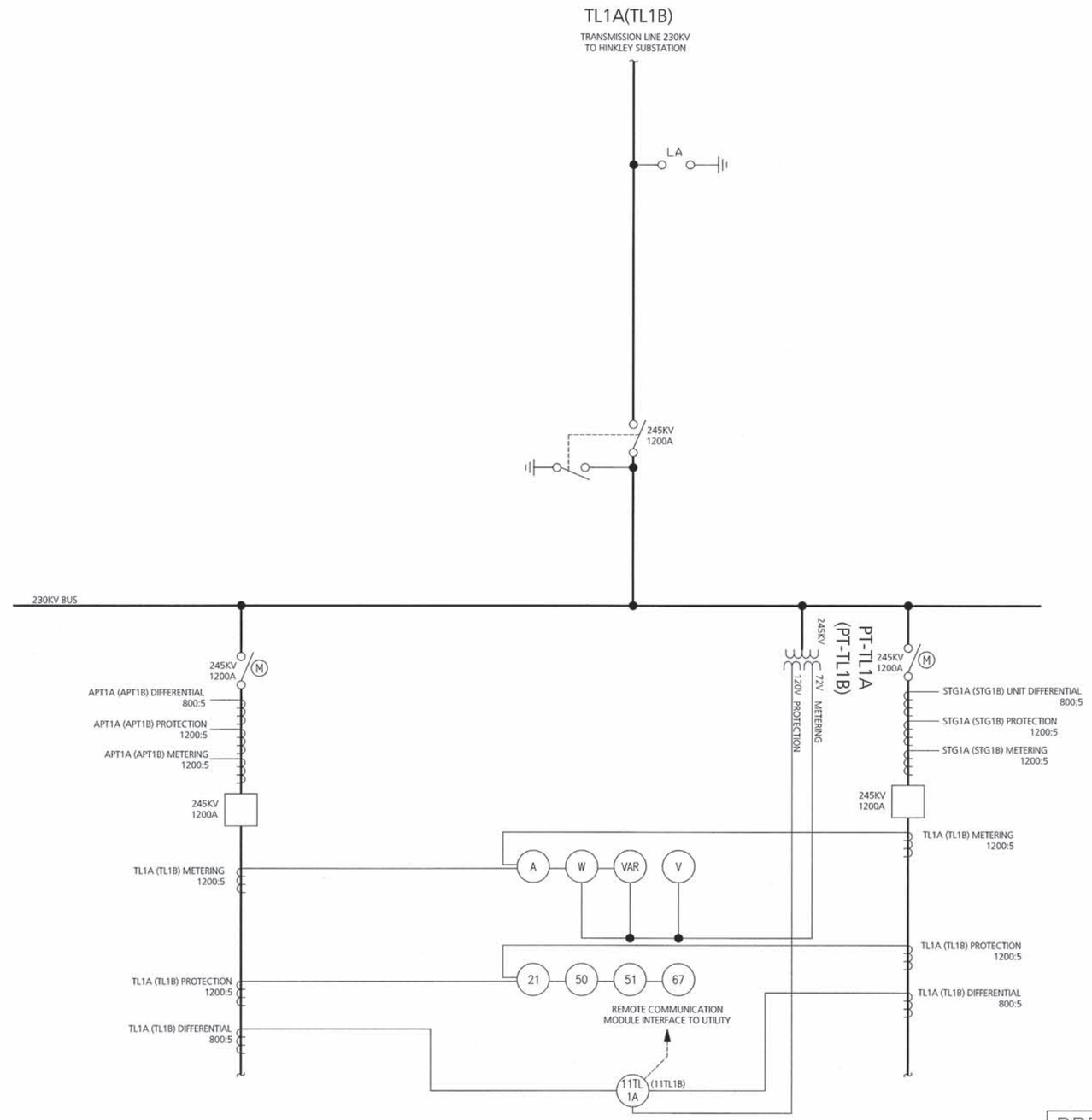

PRELIMINARY

DATE 17FEB 09

Figure 2-7(j)

ABENCS
Abener Engineering and Construction Services, LLC
ST. LOUIS, MISSOURI

ABENGOA SOLAR

ABENER DRAWING NUMBER
XXXX-PLN-BBB-28-21-0112

230KV METERING & RELAYING
ONE LINE – TL1A (TL1B)
ALPHA (BETA) SITE

ABENGOA SOLAR — HARPER LAKE, CA

	BY	DATE	APP'D.	DATE	JOB NO.	REVISION
DRAWN	MKB	2/09	GDT	17 FEB 09	120010	
CHECKED					DRAWING NO. ED-0112	
SCALE	NONE					

NO.	DATE	DESCRIPTION	BY	BY	BY

REVISIONS

REFERENCES

17 FEB 09	FOR REVIEW
ISSUE DATE	PURPOSE OF ISSUE

THIS DRAWING IS THE PROPERTY OF
ABENCS
Abener Engineering and Construction Services, LLC
INFORMATION AND KNOW-HOW HEREON ARE CONFIDENTIAL AND PROPRIETARY AND MAY NOT BE USED, REPRODUCED, OR REVEALED TO OTHERS EXCEPT IN ACCORDANCE WITH THE TERMS OF A CONTRACT WITH OR OTHER WRITTEN PERMISSION OF Abener Engineering and Construction Services, LLC. ANY REPRODUCTIONS IN WHOLE OR PART INCLUDING SHOP DRAWINGS SHALL BEAR OR REFER TO THIS STAMP.

Plot Date/Time/User: 17-Feb-09/1:21 PM/CGMBU

P:\PROJECTS\120010 ABSOLAR HARPER LAKE CALIFORNIA\CAD120010\ELECTRICAL\ED-0112.DWG

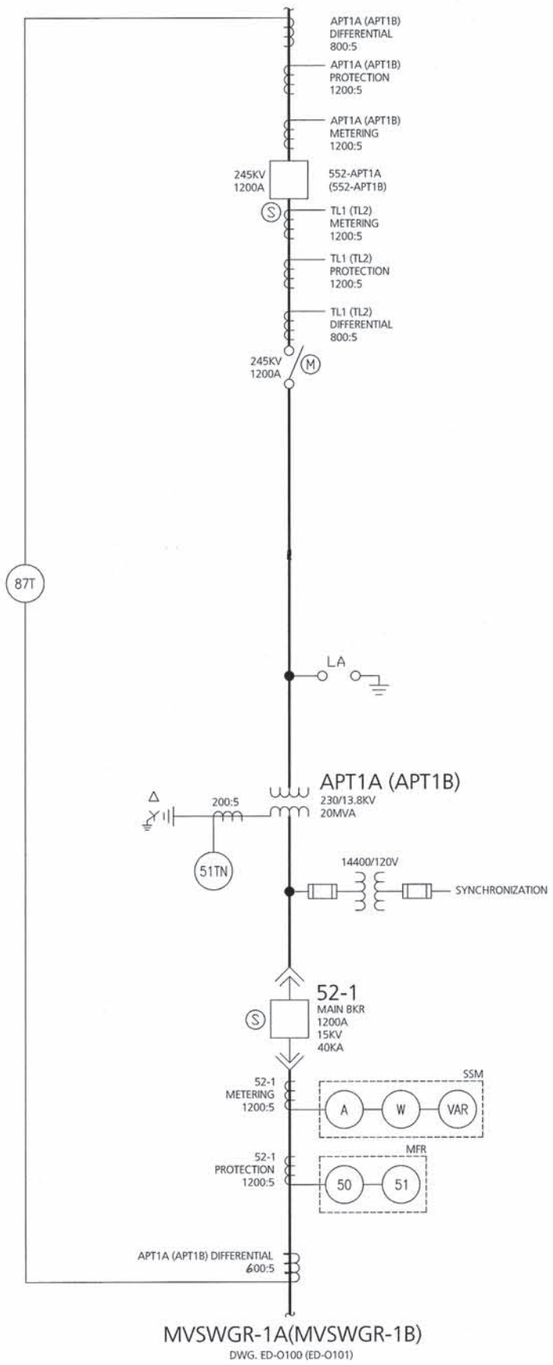

Figure 2-7(i)

PRELIMINARY

DATE 17 FEB 09

ABENCS
Abener Engineering and Construction Services, LLC
ST. LOUIS, MISSOURI

ABENGOA SOLAR

ABENER DRAWING NUMBER
XXXX-PLN-BBB-28-21-0111

230KV METERING & RELAYING
ONE LINE – APT1A (APT1B)
ALPHA (BETA) SITE

ABENGOA SOLAR — HARPER LAKE, CA

	BY	DATE	APP'D.	DATE	JOB NO.	REVISION
DRAWN	MKB	2/09	GDT	17 FEB 09	120010	
CHECKED					DRAWING NO.	
SCALE	NONE				ED-0111	

ISSUE DATE	PURPOSE OF ISSUE
17 FEB 09	FOR REVIEW

THIS DRAWING IS THE PROPERTY OF
ABENCS
Abener Engineering and Construction Services, LLC
INFORMATION AND KNOW-HOW HEREON ARE CONFIDENTIAL AND PROPRIETARY AND MAY NOT BE USED, REPRODUCED, OR REVEALED TO OTHERS EXCEPT IN ACCORDANCE WITH THE TERMS OF A CONTRACT WITH OR OTHER WRITTEN PERMISSION OF Abener Engineering and Construction Services, LLC. ANY REPRODUCTIONS IN WHOLE OR PART INCLUDING SHOP DRAWINGS SHALL BEAR OR REFER TO THIS STAMP.

REVISIONS

NO.	DATE	DESCRIPTION	BY	BY	BY

REFERENCES

DESCRIPTION

Plot Date/Time/User: 17-Feb-09/1:21 PM/COMBU

P:\PROJECTS\120010 ABSOLAR HARPER LAKE CALIFORNIA\CAD120010\ELECTRICAL\ED-0111.DWG

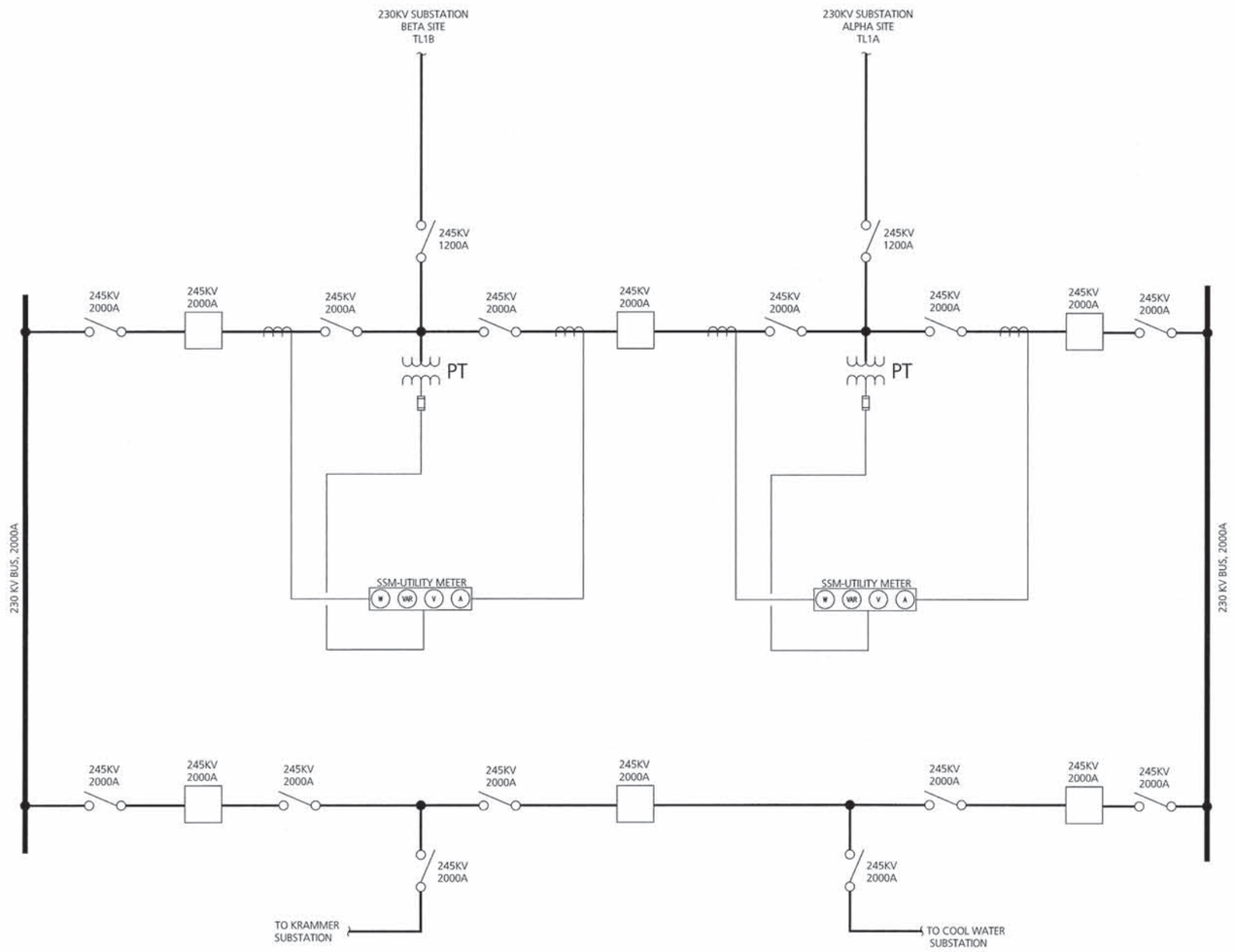

HINKLEY SUBSATION
BREAKER AND A HALF TYPE

Figure 2-9

NOTES:

1. DESIGN BY OTHERS.

PRELIMINARY

DATE 19 FEB 09

ABENCS
Abener Engineering and Construction Services, LLC
ST. LOUIS, MISSOURI

ABENGOA SOLAR

ABENER DRAWING NUMBER
XXXX-PLN-BBB-28-21-0107

GENERAL ONE-LINE DIAGRAM
230KV SUBSTATION
UTILITY INTERCONNECTION

ABENGOA SOLAR — HARPER LAKE, CA

	BY	DATE	APP'D.	DATE	JOB NO.	REVISION
DRAWN	MKB	2/09	GDT	19FEB09	120010	0
CHECKED					DRAWING NO.	
SCALE	NONE				ED-0107	

NO.	DATE	DESCRIPTION	BY	BY	BY
0	19 FEB 09	FOR REVIEW			

ISSUE DATE — PURPOSE OF ISSUE

REVISIONS — REFERENCES

THIS DRAWING IS THE PROPERTY OF ABENCS Abener Engineering and Construction Services, LLC. INFORMATION AND KNOW-HOW HEREON ARE CONFIDENTIAL AND PROPRIETARY AND MAY NOT BE USED, REPRODUCED, OR REVEALED TO OTHERS EXCEPT IN ACCORDANCE WITH THE TERMS OF A CONTRACT WITH OR OTHER WRITTEN PERMISSION OF Abener Engineering and Construction Services, LLC. ANY REPRODUCTIONS IN WHOLE OR PART INCLUDING SHOP DRAWINGS SHALL BEAR OR REFER TO THIS STAMP.

Plot Date/Time/User: 19-Feb-09/12:36 PM/CGMBU

P:\PROJECTS\120010 ABSOLAR HARPER LAKE CALIFORNIA\CAD120010\ELECTRICAL\ED-0107.DWG

APPENDIX E

WATER REGULATIONS, HYDROLOGY REPORT, DESCP, AND SWPPP

Laws, Ordinances, Regulations and Standards for Water Resources

Federal, state, county and local laws and ordinances applicable to water resources are listed in Table E-1 and discussed below.

Table E-1. Laws and Ordinances Applicable to Water Resources

Laws and Ordinances	Applicability and Requirements
Federal:	
Clean Water Act (CWA) Section 402, 33 USC Section 1342; 40 CFR Parts 112, 122 through 136	The objective of the CWA (1977) is to restore and maintain the chemical, physical, and biological integrity of the Nation's waters. The CWA regulates both direct and indirect discharges to waters of the U.S., including storm water discharges from construction and industrial activities.
State:	
California Constitution Article 10, Section 2	Prohibits waste or unreasonable use of water, regulates use and diversion of water, and requires conservation and reuse of water to the maximum extent possible.
The Porter-Cologne Water Quality Control Act; California Water Code Division 7, Chapter 1, Section 13000 et seq.	Requires the SWRCB and the nine RWQCBs to adopt water quality criteria to protect State waters, including identification of beneficial uses, narrative and numerical water quality standards, and implementation procedures.
Federal CWA, implemented by the State of California - California Storm Water Permitting Program: California Construction Storm Water Program, California Industrial Storm Water Program	Construction activities that disturb one or more acre are required to obtain coverage under California's General Construction Permit, which requires the development and implementation of a Storm Water Pollution Prevention Plan (SWPPP). Industrial activities with the potential to impact storm water discharges are required to obtain a NPDES permit for those discharges.
California Water Code Division 1, Chapter 6, Article 2, Section 461	Stipulates that the primary interest of the people of the state in conservation of available water resources requires the maximum reuse of reclaimed water in the satisfaction of requirements for beneficial uses of water.

Laws and Ordinances	Applicability and Requirements
California Water Code Division 2, Part 2, Chapter 1, Article 1, Section 1200 - Water Rights	Defines water subject to appropriation through application to the State Water Resources Control Board (SWRCB) as surface water and subterranean streams flowing through known and definite channels.
California Water Code Division 7, Chapter 4, Article 4, Section 13260 et seq	Requires filing with the appropriate RWQCB Report of Waste Discharge that could affect the water quality of the state, unless the requirement is waived pursuant to California Water Code section 13269 (a).
California Water Code Division 7, Chapter 7, Article 7, Sections 13550, 13551, 13552.6	Requires the use of recycled water for industrial purposes subject to recycled water availability, quality, quantity, cost, and public health impacts. Prohibits use of potable domestic quality water for non-potable uses if suitable recycled water is available.
California Water Code Division 7, Chapter 10, Article 3, Section 13751	Requires well completion report for constructing, altering, or destroying a water well, cathodic protection well, groundwater monitoring well, or geothermal heat exchange well.
State Water Resources Control Board Resolution 75-58	Encourages the use of wastewater for power plant cooling and sets an order of preference for water use for cooling purposes.
California Code of Regulations, Title 23, Division 3, Chapter 9, Chapter 15	Establishes requirements for waste discharge report and requirements specifying conditions for protection of water quality. Outlines classification and siting and construction criteria for waste management units and discharges of waste to land. Provides guidance for surface impoundments and Land Treatment Units, also stipulates operational and maintenance procedures to minimize mobility of waste materials.

Laws and Ordinances	Applicability and Requirements
California Code of Regulations, Title 22, Division 4, Chapter 15, Articles 1, 2, 3, 4, 4.1, 4.5, 5, and 5.5, Sections 64400.80 through 64445	Requires periodic monitoring of water quality for potable water wells supplying a public water system (non-transient, non-community water systems). Regulated wells must be sampled for bacteriological quality once a month and the results submitted to the California Department of Health Services (DHS). The wells must also be monitored for inorganic chemicals once and organic chemicals quarterly during the year designated by the DHS. DHS will designate the year based on historical monitoring frequency and laboratory capacity.
CEC Policy, adopted pursuant to Public Resources Code, Section 25300 et seq., 25523(a)	The CEC will approve the use of "fresh inland" water for cooling purposes by power plants only under certain circumstances. Requires submission of information to the CEC concerning proposed water resources and water quality protection in the AFC.
Local:	
San Bernardino County Ordinance Code, Title 3, Division 3, Chapter 6, Domestic Water Sources and Systems, Article 3, Water Wells	Describes requirements for permitting, siting, constructing, and destroying groundwater wells. Stipulates conditions for abandonment and taking wells out of service. Describes water quality standards and requirements for the inspections of wells.
San Bernardino County Ordinance Code, Title 3, Division 3, Chapter 8, Waste Management, Article 5, Liquid Waste Disposal	Article regards approval, permitting, and location requirements of liquid waste disposal systems.
San Bernardino County Ordinance Code, Title 6, Division 3, Chapter 3, Uniform Plumbing Code	Describes installation and inspection requirements for locating disposal/leach fields, and seepage pits.

5.17.1.1 Federal Laws

Clean Water Act of 1977 (including 1987 amendments) Section 402 and 402, 33 USC Section 1342; 40 CFR Parts 112, 122-136

The primary objective of the Clean Water Act (CWA) is to restore and maintain the chemical, physical, and biological integrity of the nation's surface waters. Pollutants regulated under the CWA include "priority" pollutants, including various toxic pollutants; "conventional" pollutants, such as biochemical oxygen demand, total suspended solids, oil and grease, and pH, and "non-conventional" pollutants, including any pollutant not identified as either conventional or priority.

The CWA regulates both direct and indirect discharges. The National Pollutant Discharge Elimination System (NPDES) Program (CWA §402) controls the direct discharges and storm water discharges into waters of the United States. NPDES permits contain industry-specific, technology-based limits and may also include additional water quality-based limits, and they establish pollutant-monitoring requirements. A NPDES permit may also include discharge limits based on federal or state water-quality criteria or standards. In 1987, the CWA was amended to include a program to address storm water discharges for industrial and construction activities. The Lahontan Regional Water Quality Control Board (RWQCB) administers both the NPDES and storm water discharge permits under the CWA in the project area.

According to the San Bernardino County Flood Control District, the 100-year floodplain has not been established for the Harper Dry Lake area.

5.17.1.2 State Laws and Ordinances

State of California Constitution Article 10, Section 2

Article 10, Section 2 of the California Constitution requires that water resources of the State be put to beneficial use to the fullest extent of which they are capable. This section prohibits the waste or unreasonable use, or unreasonable method of use or unreasonable method of diversion, of water.

Porter-Cologne Water Quality Control Act

Porter-Cologne Water Quality Control Act of 1967, Water Code Division 7, Chapter 1, Section 13000 *et seq.* requires the State Water Resources Control Board (SWRCB) and the nine RWQCBs to adopt water quality criteria to protect State waters. Those criteria include the identification of beneficial uses, narrative and numerical water quality standards, and implementation procedures. Water quality criteria for the proposed project area are contained in the Water Quality Control Plan for the Lahontan Region (Basin Plan) which was adopted in 1994 and is in the process of being amended. This plan sets numerical and/or narrative water quality standards controlling the discharge of wastes to the State's waters and land.

California Storm Water Permitting Program

California Construction Storm Water Program. Construction activities that disturb one acre or more are required to obtain coverage under California's General Permit for

Discharges of Storm Water Associated with Construction Activity, Water Quality Order 99-08-DWQ (General Construction Permit CAS 000002). Activities subject to permitting include clearing, grading, stockpiling, and excavation.

The General Construction Permit requires the development and implementation of a Storm Water Pollution Prevention Plan (SWPPP) that specifies Best Management Practices (BMPs) that will reduce or prevent construction pollutants from leaving the site in storm water runoff and will also minimize erosion associated with the construction project. The SWPPP must contain site map(s) that show the construction site perimeter, existing and proposed structures and roadways, storm water collection and discharge points, general topography both before and after construction, and drainage patterns across the site. Additionally, the SWPPP must describe the monitoring program to be implemented.

California Industrial Storm Water Program. Industrial activities with the potential to impact storm water discharges require a NPDES permit. In California, an Industrial Storm Water General Permit, Order 97-03-DWQ (General Industrial Permit CAS 000001) may be issued to regulate discharges associated with power generation facilities. The General Industrial Permit requires the implementation of management measures that will protect water quality. In addition, the discharger must develop and implement a SWPPP and a monitoring plan. Through the SWPPP, sources of pollutants are to be identified and the means to manage the sources to reduce storm water pollution described. The monitoring plan requires sampling of storm water discharges during the wet season and visual inspections during the dry season. A report must be submitted to the RWQCB each year by July 1 documenting the status of the program and monitoring results.

California Water Code

Division 1, Chapter 6, Article 2, Section 461. This law stipulates that the primary interest of the people of California in the conservation of all available water resources requires the maximum reuse of reclaimed water in the satisfaction of requirements for beneficial uses of water.

Division 2, Part 2, Chapter 1, Article 1, Section 1200 "Water Rights". This law classifies water in one of three categories: surface water, percolating groundwater, and "subterranean streams that flow through known and definite channels". Only surface water and subterranean stream water are within the permitting jurisdiction of the State Water Resources Control Board (SWRCB). Appropriation of those waters requires a SWRCB permit, and is subject to various permit conditions.

In establishing whether there is a condition of subterranean streams, the SWRCB uses a finding that there must be evidence of bed and banks and water flowing along a line of a surface stream (Sax 2002). Based on a review of the subsurface conditions at the Project site, there is no evidence to support that the groundwater is flowing in subterranean streams, and as such, there is no permit required for appropriation from the SWRCB.

Division 7, Chapter 4, Article 4, Section 13260 et seq. This law requires filing with the appropriate RWQCB a report of waste discharge (ROWD) that could affect the water quality of the State, unless the requirement is waived pursuant to Water Code Section

13269(a). The report shall describe the physical and chemical characteristics of the waste that could affect its potential to cause pollution or contamination. The report shall include the results of all tests required by regulations adopted by the board, any test adopted by the Department of Toxic Substances Control (DTSC) pursuant to Section 25141 of the Health and Safety Code for extractable, persistent, and bio-accumulative toxic substances in a waste or other material, and any other tests that the SWRCB or RWQCB may require.

Division 7, Chapter 7, Article 7, Section 13550. Use of recycled water is required for industrial purposes subject to recycled water being available and a number of criteria, including provisions that the quality and quantity of the recycled water are suitable for the use, the cost is reasonable, the use is not detrimental to public health, and the use will not impact downstream users or biological resources.

Division 7, Chapter 7, Article 7, Section 13551. A person or public agency, including a state agency, city, county, district, or any other political subdivision of the state, shall not use water from any source of quality suitable for potable domestic use for non-potable uses if suitable recycled water is available as provided in Section 13550.

Division 7, Chapter 7, Article 7, Section 13552.6. This law specifically identifies the use of potable domestic water for cooling towers as an unreasonable use of water within the meaning of Section 2 of Article 10 of the California Constitution, if suitable recycled water is available and the water meets the requirements set forth in Section 13550.

Division 7, Chapter 10, Article 3, Section 13751. Anyone who constructs, alters, abandons, or destroys a water well, cathodic protection well, groundwater monitoring well, or geothermal heat exchange well must file a well completion report with the DWR within 60 days from the date its construction, alteration, abandonment, or destruction is completed.

State Water Resources Control Board Resolution 75-58

On June 19, 1975, the SWRCB adopted the Water Quality Control Policy on the Use and Disposal of Inland Waters used for Power Plant Cooling. The purpose of the policy is to provide consistent statewide water quality principles and guidance for adoption of discharge requirements, and implementation actions for power plants that depend on inland waters for cooling. State policy encourages the use of wastewater for power plant cooling and sets the following order of preference for sources: 1) wastewater being discharged to the ocean; 2) ocean water; 3) brackish water from natural sources or irrigation return flows; 4) inland waste waters of low total dissolved solids (TDS); and 5) other inland waters. The criteria for the selection of water delivery options involve economic feasibility, engineering constraints such as cooling water composition and temperature and environmental considerations such as impacts on riparian habitat, groundwater levels, and surface and subsurface water quality.

California Code of Regulations

Title 23, Division 3, Chapter 9. The RWQCB must issue a report of waste discharge for discharges of waste to land pursuant to the Water Code. The report requires submittal of information regarding the proposed discharge, waste management unit design, and

monitoring program. Waste Discharge Requirements (WDRs) issued by the RWQCB establish construction and monitoring requirements for the proposed discharge. The SWRCB has adopted general waste discharge requirements (97-10-DWQ) for discharge to land by small domestic wastewater treatment systems.

Title 23, Division 3, Chapter 15. This regulation outlines siting, construction and monitoring requirements for waste discharges to land for landfills, surface impoundments, land treatment units and waste piles. The chapter provides closure and post-closure maintenance and monitoring requirements for Class II designated waste facilities and surface impoundments that are applicable to the project.

Title 22, Division 4, Chapter 15, Articles 1, 2, 3, 4, 4.1, 4.5, 5, and 5.5 Water Wells, Sections 64400.80 through 64445. These regulations require monitoring for potable water wells supplying public water systems, defined as non-transient, non-community water systems (serving 25 people or more for more than six months); the project will employ about 63 workers during normal MSP operations and 73 workers during the summer months. Regulated wells must be sampled for bacteria once a month and the results submitted to the DHS. The wells must also be monitored for inorganic chemicals once and organic chemicals quarterly during the year designated by the DHS. DHS will designate the year based on historical monitoring frequency and laboratory capacity.

Public Resources Code

CEC Policy adopted pursuant to Section 25300 et seq. In the 2003 "Integrated Energy Policy Report", consistent with SWRCB Policy 75-58 and the Warren-Alquist Act, the CEC adopted a policy to approve the use of "fresh inland" water for cooling purposes by power plants only where alternative water supply sources and alternative cooling technologies are shown to be "environmentally undesirable" or "economically unsound."

Section 25523(a). The Public Resources Code provides for the inclusion of requirements in a CEC License Decision to assure protection of environmental quality and requires submission of information to the CEC concerning proposed water resources and water quality protection.

The administering agencies for the State laws and ordinances are the CEC, the SWRCB, and the Lahontan RWQCB. The project will comply with all applicable State laws and ordinances related to water use and quality during construction and operation.

5.17.1.3 Local Laws and Ordinances

San Bernardino County

Ordinance Code, Title 3, Division 3, Chapter 6 - Domestic Water Sources and Systems, Article 3 – Water Wells, Section 33.0631 - Permits. This ordinance requires that no person or entity, as principal agent or employee, shall dig, drill, bore, drive, reconstruct or destroy (1) a well that is or has been used to produce or inject water (2) a cathodic protection well (3) an observation well or (4) an exploration well without first filing a written application to do so with the DEHS by receiving and retaining a valid permit as provided herein.

Ordinance Code, Title 3, Division 3, Chapter 6 - Domestic Water Sources and Systems, Article 3 – Water Wells, Section 33.0636 – General Location of Water Wells. This ordinance describes requirements for the general siting of water wells. It states that it shall be unlawful for any person or entity to drill, dig, excavate, or bore any water well at any location where sources of pollution or contamination are known to exist or existed, or where otherwise substantial risk exists that water from that location may become contaminated or polluted even though the well may be properly constructed and maintained. Every well shall be located an adequate distance from all potential sources of contamination and pollution.

Ordinance Code, Title 3, Division 3, Chapter 6 - Domestic Water Sources and Systems, Article 3 – Water Wells, Section 33.0638 – Well Surface and Subsurface Construction Features. This ordinance outlines the requirements for placement of the annular seal for water supply wells. It includes guidelines for the placement of a sample spigot on the pump discharge line of any water well used as a public water supply adjacent to the pump and on the distribution side of the check valve. It further states that a check valve shall be provided on the pump discharge line adjacent to the pump for all water wells. This ordinance states that all community water supply wells and individual domestic wells shall be provided with a pipe or other effective means through which chlorine or other approved disinfecting agents may be introduced directly into the well. It requires that a master meter or other suitable measuring device shall be located at each source facility and shall accurately register the quantity of water delivered to the distribution system from all community water supply wells serving a public water supply system. This ordinance outlines the requirements of the use of an air-relief vent, if present.

Ordinance Code, Title 3, Division 3, Chapter 6 - Domestic Water Sources and Systems, Article 3 – Water Wells, Section 33.0640 – Water Quality Standards. This ordinance states that water from all new, repaired, and reconstructed community water supply wells shall be tested and meet standards for microbiological, chemical, physical, and radiological quality in accordance with California Administrative Code, Title 22, "Domestic Water Quality and Monitoring."

Ordinance Code, Title 3, Division 3, Chapter 6 - Domestic Water Sources and Systems, Article 3 – Water Wells, Section 33.0641 – Required Inspections of Wells. This ordinance requires that an inspection shall be requested of DEHS (a) at least 24 hours in advance of the filling of the annular space or conductor casing, (b) after the installation of the surface protective slab, pumping, and other required equipment, (c) and immediately before and during the destruction of a well; immediately after the well destruction, (d) and at any other time stipulated on the DEHS permit.

Ordinance Code, Title 3, Division 3, Chapter 6 - Domestic Water Sources and Systems, Article 3 – Water Wells, Section 33.0643 – Well Abandonment. This ordinance code states that if after 30 days of abandonment, the owner of an abandoned well has not declared the well to DEHS for proposed reuse per Section 33.0644, then the well shall be destroyed per Section 33.0631 of this Article. If any well is found by DEHS to be a hazard, whereby its continued existence is likely to cause damage to groundwater or to the public health and safety, DEHS shall direct the owner to destroy the well within a stated period. At the time of removal of a pump, the casing shall be provided with an adequate cap at the surface and shall be maintained so that it will not be a hazard to

health or safety until such time that the abandoned well is properly sealed from the bottom to the top.

Ordinance Code, Title 3, Division 3, Chapter 8 - Waste Management, Article 5 – Liquid Waste Disposal, Section 33.0892 – Approved Liquid Waste Disposal Systems. This ordinance states that no person or entity shall install, utilize, or control the use of any liquid waste disposal system within this jurisdiction unless it is (a) a system which complies with applicable portions of the Uniform Plumbing Code as amended and adopted by this jurisdiction and complies with DEHS standards, (b) a system which has been approved by the DEHS and the building authority of this jurisdiction or (c) an alternative liquid-waste disposal system which has been approved by the DEHS, the appropriate building official of this jurisdiction, and the appropriate California Regional Water Quality Control Board as protecting water quality, public health, and safety.

Ordinance Code, Title 3, Division 3, Chapter 8 - Waste Management, Article 5 – Liquid Waste Disposal, Section 33.0893 – Permits for Alternative Liquid Waste Disposal Systems. This ordinance states that no person or entity shall install any alternative liquid-waste disposal system without first obtaining a DEHS permit to do so and paying those fees to the DEHS as are set forth in the Chapter 2 of Division 6 of Title 1 of the San Bernardino County Code.

Ordinance Code, Title 3, Division 3, Chapter 8 - Waste Management, Article 5 – Liquid Waste Disposal, Section 33.0894 – Liquid Waste Disposal System Location Requirements. This ordinance states that location requirements shall be as stated in the DEHS Standards on file with the Clerk of the Board under the date of August 1992, as the same may be amended by the DEHS from time to time and approved by the Board of Supervisors. It further states that all liquid waste disposal systems within this jurisdiction shall be installed to comply with minimum Standards unless the conditions of a DEHS-issued permit otherwise allows.

Ordinance Code, Title 6, Division 3, Chapter 3 - Uniform Plumbing Code. This code describes installation and inspection requirements for locating disposal/leach fields, and seepage pits.

The Hydrology Report and DEIS SWPP are on file with the US Department of Energy. Contact: Carol Hammel-Smith, 202-287-5655

Merrell-Johnson Engineering, Inc.
CIVIL ENGINEERING ♦ SURVEYING

HYDROLOGY STUDY

For

MOJAVE SOLAR PROJECT
HARPER DRY LAKE, CA

Prepared For:

MOJAVE SOLAR LLC
Victorville, CA
July, 2009

Prepared by:

Merrell-Johnson Engineering, Inc.

12138 Industrial Blvd., Suite 240
Victorville, CA 92395
(760) 241-6146

Job No. 3001

Brad S. Merrell
Principal Engineer
R.C.E. 49423 Exp. 09/30/10

Mark D. Rowan
Project Manager

Storm Water Pollution Prevention Plan

For:
MOJAVE SOLAR PROJECT

ADMINISTRATIVE DRAFT
GRADING PERMIT:_____
BUILDING PERMIT:_____

Prepared for:
ABENGOA SOLAR INC.
13911 Park Avenue, Suite 206
Victorville, CA 92392

Contractor:
(tba)

Project Site Location/Address:
Harper Dry Lake, CA

Contractor's Storm Water Pollution Prevention Manager
(tba)

SWPPP Prepared by:
Merrell-Johnson Engineering, Inc.
12138 Industrial Blvd., Suite 240
Victorville, CA 92395
(760) 241-6146
Project# 3001

SWPPP Preparation Date:
07/28/09

Estimated Project Dates:
Start of Construction: _____ Completion of Construction: _____

WDID# / Receipt of Notice Of Intent following page

100-year Floodplain Along SPS Corridors

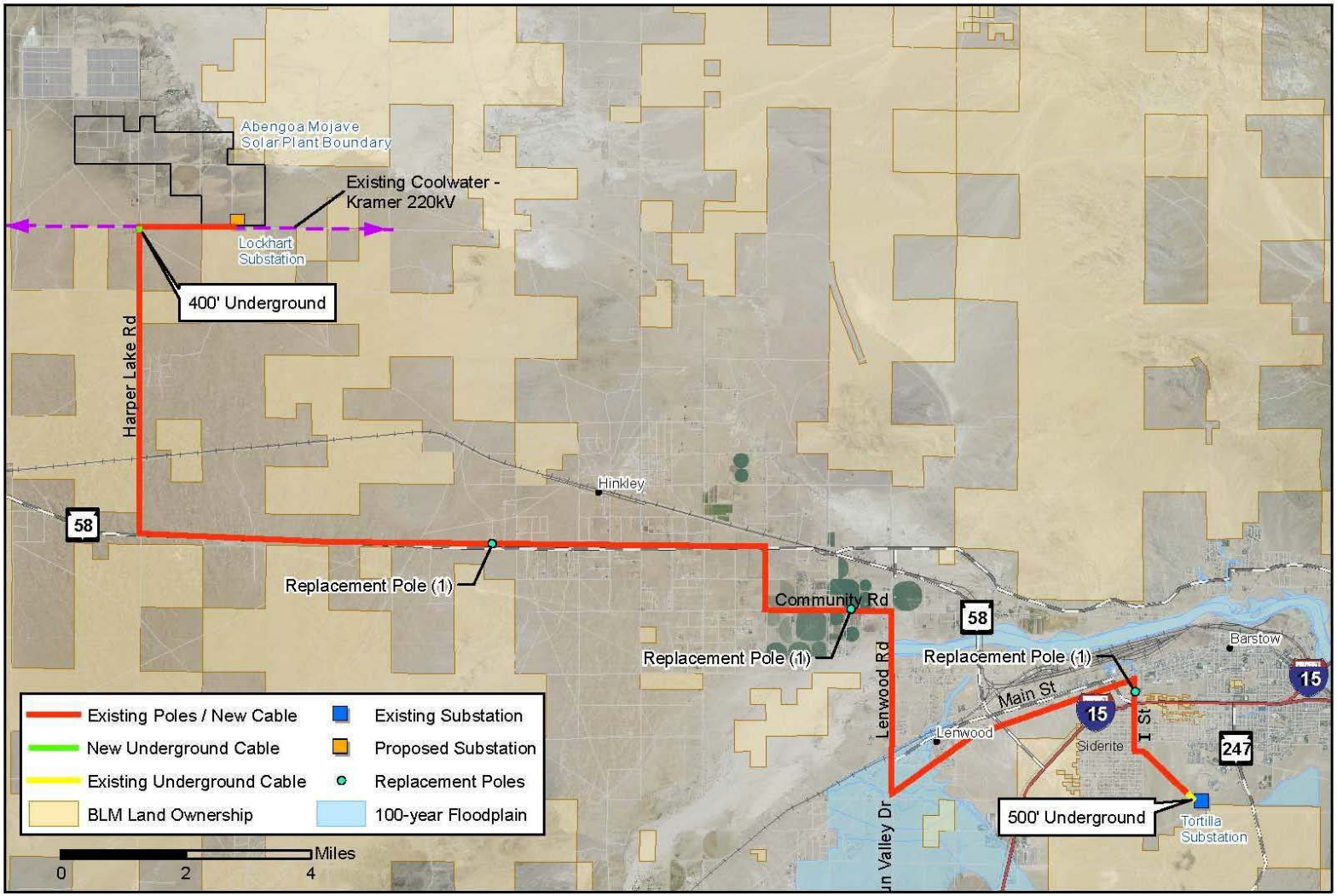

FIGURE E-1
100-YEAR FLOODPLAIN
CROSSED BY LOCKHART-TORTILLA TELECOMMUNICATION LINE

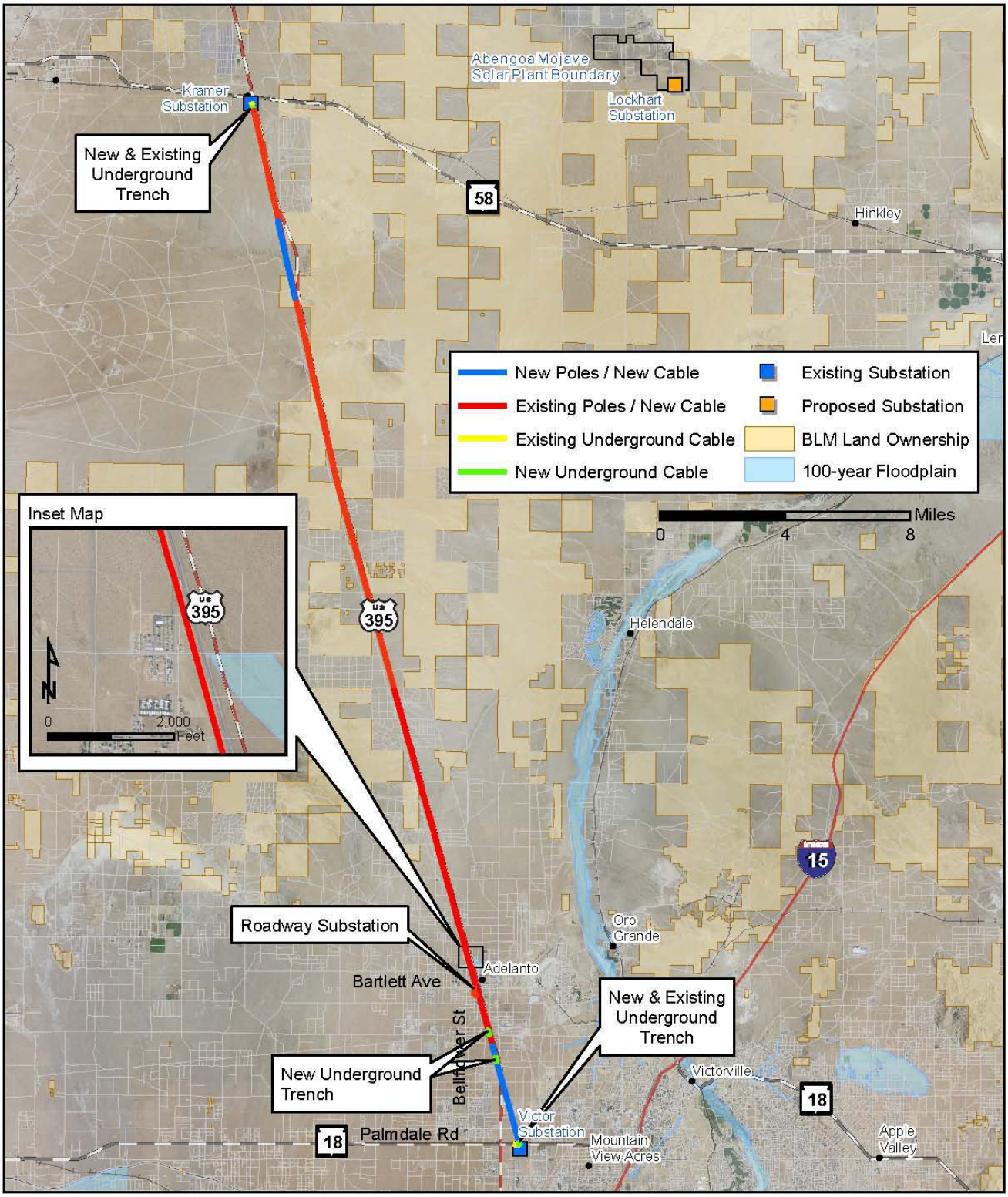

FIGURE E-2
100-YEAR FLOODPLAIN
CROSSED BY KRAMER-VICTOR TELECOMMUNICATION LINE

Jurisdictional Waters within the SPS Corridors

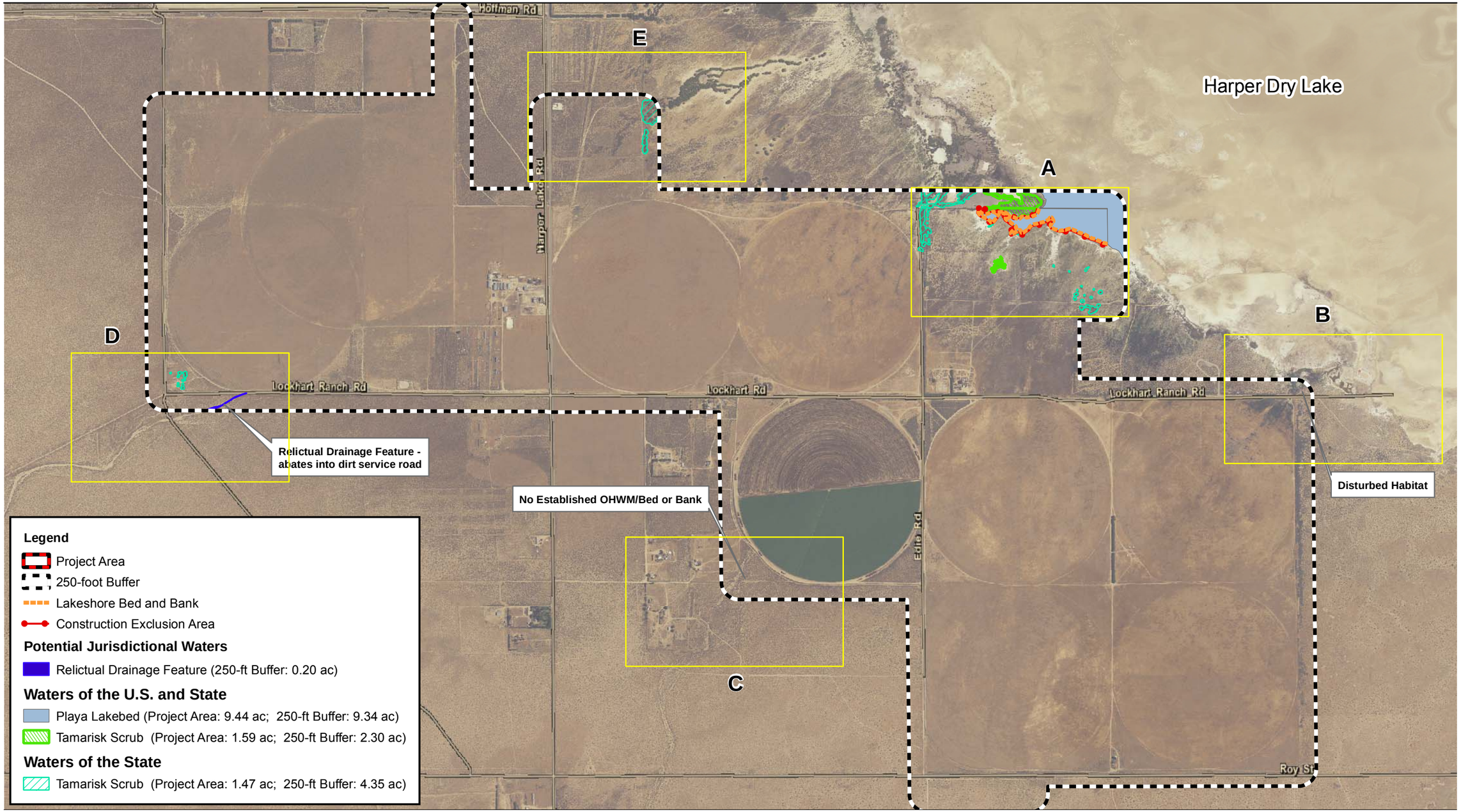

Source: NAIP 2005; Mojave Solar, LLC 2009

1,375 687.5 0 1,375 Feet

Scale: 1 = 16,500; 1 inch = 1,375 feet

Figure E-3
Potential Jurisdictional Waters of the U.S. and State

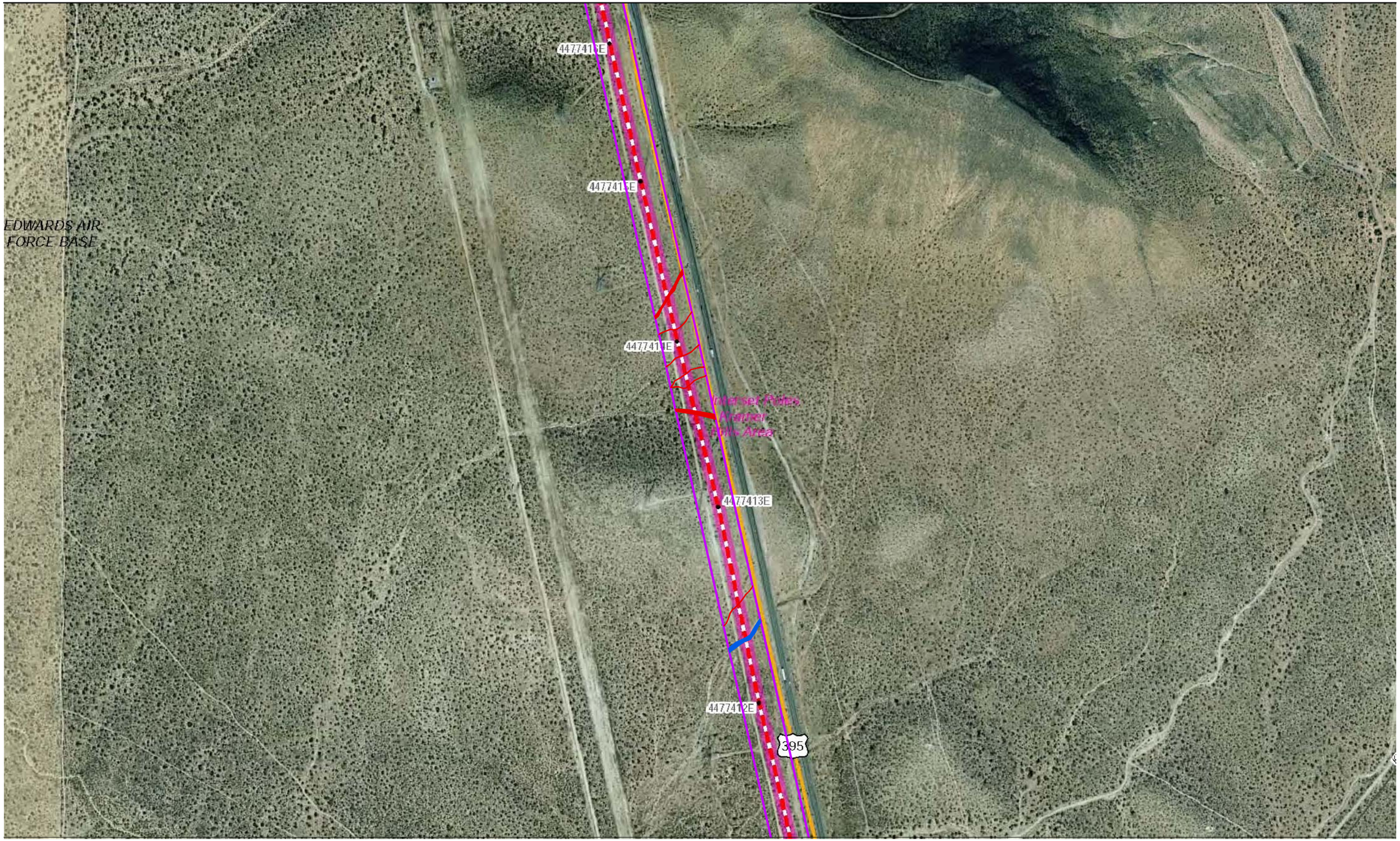

Source: Mojave Solar LLC 2010; AECOM 2010; Edison 2011

500 250 0 500 Feet

Scale: 1 = 6,000; 1 inch = 500 feet

LEGEND -

Proposed New SCE Lockhart Substation Site
Existing Substation (SCE, 2010)
Mohave Solar (Abengoa Solar Inc.) Plant Site
Existing Poles on Telecom Route
Existing Poles within 100ft of Jurisdictional Waters

Proposed Telecommunication Path
Kramer-Lockhart Path
Kramer-Victor Path
Lockhart-Tortilla Path
Coolwater-Tortilla Path
Pole Interset Areas
Existing Poles to be Replaced

SPS Alignment Field Verified Waters (AECOM)
Jurisdiction
U.S. and State Unvegetated Wash
State Unvegetated Wash
State Vegetated Swale
U.S. and State Unvegetated Wash 100ft Buffer
State Unvegetated Wash 100ft Buffer
State Vegetated Swale 100ft Buffer

Freeways (TBM, 2010)
Highways (TBM, 2010)
Major Roads (TBM, 2010)
Minor Roads (TBM, 2010)
Railroads (TBM, 2010)

Potential Jurisdictional Waters of the U.S.
Unvegetated Wash (20.44 acres)

Potential Jurisdictional Waters of the State
Unvegetated Wash (10.08 acres)
Vegetated Swale (4.88 acres)

SPS Alignment

PROPOSED NEW SCE LOCKHART SUBSTATION PORTIONS OF ROUTE REQUIRING INTERSET POLES

E-4

Mojave Solar Project

Path: P:\2008\08080191 Harper Lake Abengoa AFC\6.0 GIS\6.2 Project Directory\6.2.5 Layout\EA\Winter2011\E-4 Edison Sheet.mxd, 02/16/11, IrelandM

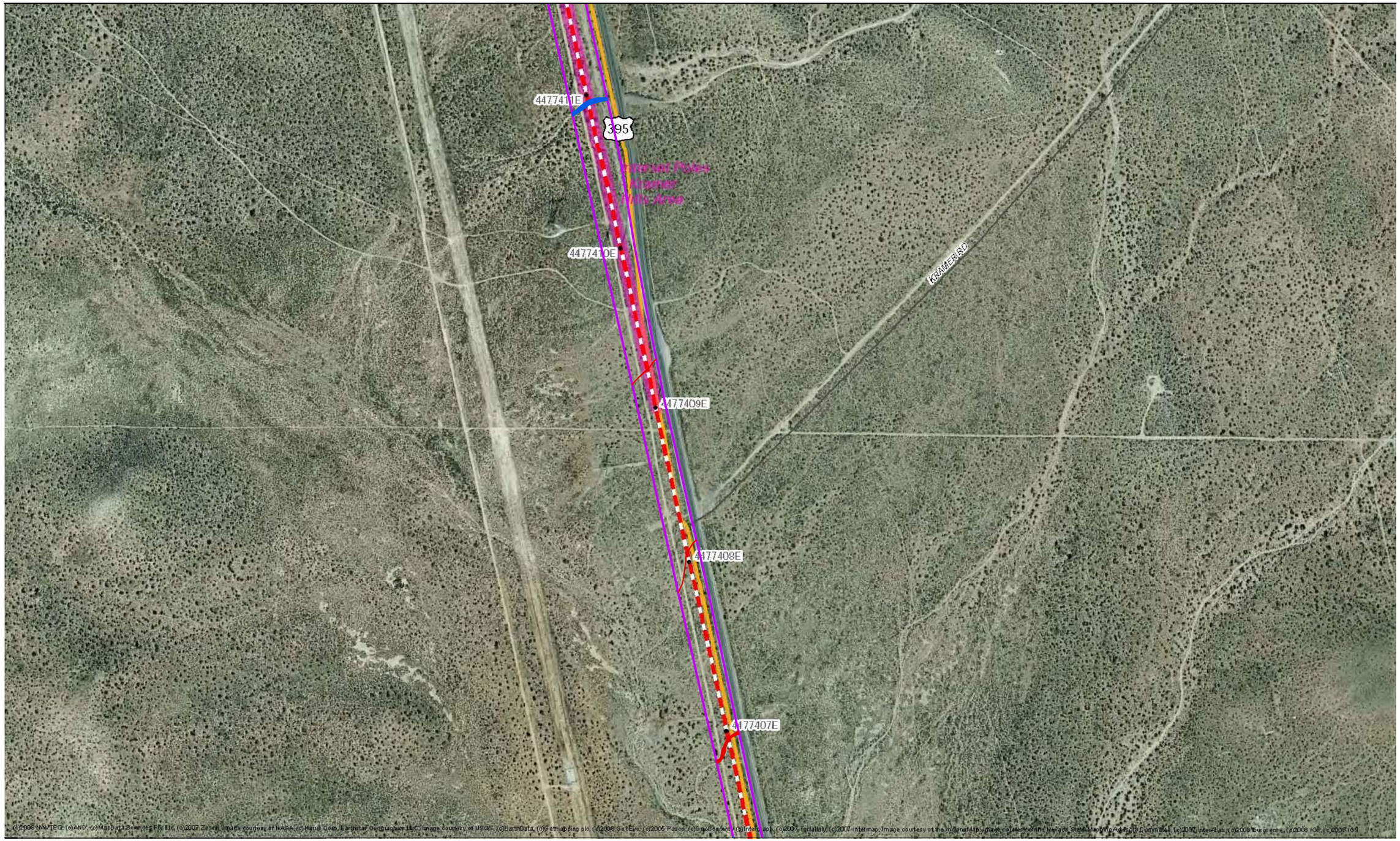

Source: Mojave Solar LLC 2010; AECOM 2010; Edison 2011

500 250 0 500 Feet

Scale: 1 = 6,000; 1 inch = 500 feet

LEGEND -

- Proposed New SCE Lockhart Substation Site
- Existing Substation (SCE, 2010)
- Mohave Solar (Abengoa Solar Inc.) Plant Site
- Existing Poles on Telecom Route
- Existing Poles within 100ft of Jurisdictional Waters

Proposed Telecommunication Path

- Kramer-Lockhart Path
- Kramer-Victor Path
- Lockhart-Tortilla Path
- Coolwater-Tortilla Path
- Pole Interset Areas
- Existing Poles to be Replaced

SPS Alignment Field Verified Waters (AECOM)

Jurisdiction

- U.S. and State Unvegetated Wash
- State Unvegetated Wash
- State Vegetated Swale
- U.S. and State Unvegetated Wash 100ft Buffer
- State Unvegetated Wash 100ft Buffer
- State Vegetated Swale 100ft Buffer

- Freeways (TBM, 2010)
- Highways (TBM, 2010)
- Major Roads (TBM, 2010)
- Minor Roads (TBM, 2010)
- Railroads (TBM, 2010)

Potential Jurisdictional Waters of the U.S.

Unvegetated Wash (20.44 acres)

Potential Jurisdictional Waters of the State

Unvegetated Wash (10.08 acres)

Vegetated Swale (4.88 acres)

SPS Alignment

PROPOSED NEW SCE LOCKHART SUBSTATION PORTIONS OF ROUTE REQUIRING INTERSET POLES

E-5

Mojave Solar Project

Path: P:\2008\08080191 Harper Lake Abengoa AFC\6.0 GIS\6.2 Project Directory\6.2.5 Layout\EA\Winter2011\E-5 Edison Sheet.mxd, 02/16/11, IrelandM

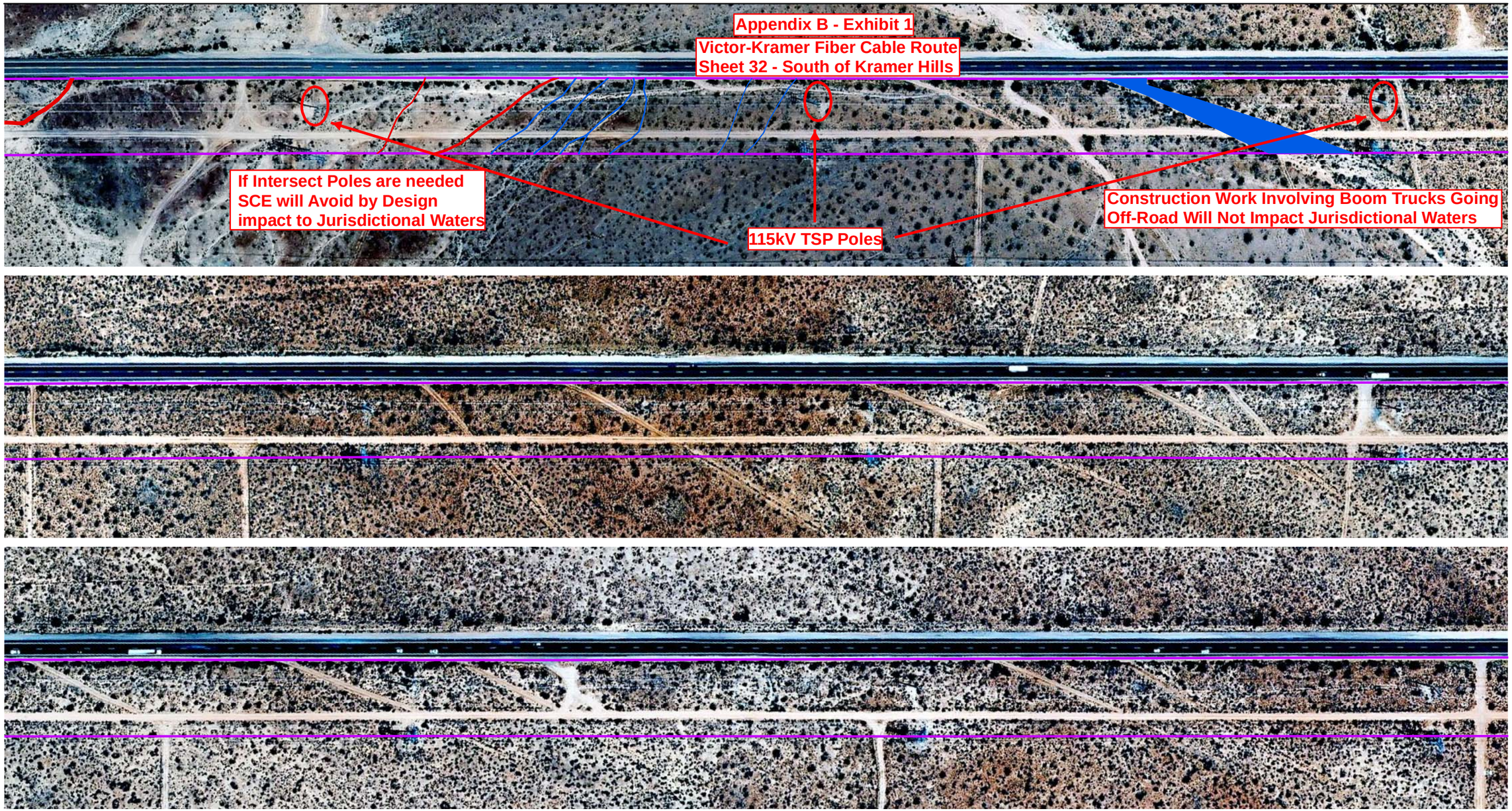

Source: Mojave Solar LLC 2010; AECOM 2010; ESRI 2011

200 100 0 200 Feet

Scale: 1 = 2,400; 1 inch = 200 feet

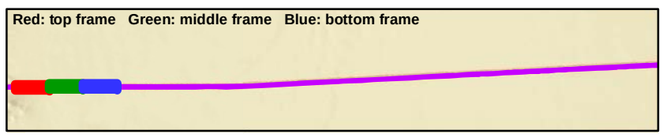

Potential Jurisdictional Waters of the U.S.
Unvegetated Wash (20.44 acres)

Potential Jurisdictional Waters of the State
Unvegetated Wash (10.08 acres)
Vegetated Swale (4.88 acres)

SPS Alignment

Methods of Avoidance

Mojave Solar Project - SPS Alignment

E-6

Mojave Solar Project

Path: P:\2008\08080191 Harper Lake Abengoa AFC\6.0 GIS\6.2 Project Directory\6.2.5 Layout\EA\Winter2011\E-6 SPS Alignment Waters Sheet 32.mxd, 02/16/11, IrelandM

APPENDIX F

SOUTHERN CALIFORNIA EDISON LOCKHART SUBSTATION PROJECT DESCRIPTION FOR ABENGOA SOLAR, INC.

The April 15, 2010 Lockhart Substation Project Description is a draft description of the substation, interconnect and fiber-optic telecommunication system prepared by SCE. This description was used in generating the project description in the EA, however it should be noted that the description was modified between April 2010 and January 2011 to accommodate minor modifications to the proposed SPS upgrades and design assumptions. Changes to the description are accounted for in the EA project description, Chapter 2.0. The construction equipment and workforce projections found in the April 15, 2010 tables were used in the impact analysis and are therefore included in this appendix as reference.

SOUTHERN CALIFORNIA EDISON
LOCKHART SUBSTATION
PROJECT DESCRIPTION
FOR ABENGOA SOLAR INC.

Dated: April 15, 2010

LOCKHART SUBSTATION PROJECT DESCRIPTION
Table of Contents

1.0 Project Overview

2.0 Project Location

3.0 Lockhart Substation
- 3.1 Substation Design and Equipment
- 3.2 Substation Construction
  - 3.2.1 Grading and Ground Disturbance
    - Table 1: Substation Materials and Estimated Volumes
  - 3.2.2 Construction Yard/Staging Areas
  - 3.2.3 Geotechnical Studies
  - 3.2.4 Below Grade Construction
  - 3.2.5 Equipment Installation
  - 3.2.6 Hazards and Hazardous Materials
  - 3.2.7 Waste Management
  - 3.2.8 Post-Construction Cleanup
  - 3.2.9 Construction Equipment Personnel and Temporary Facilities
    - Table 2: Construction Equipment and Personnel Use Estimations

4.0 Transmission Lines and Related Structures
- 4.1 Transmission Line and Related Structures Design and Equipment
  - 4.1.1 220 kV Transmission Line Loop-In Design
  - 4.1.2 Existing 220 kV Transmission Line Structure Modification/Replacement Design
  - 4.1.3 220 kV Generation Tie Line Extension Design
- 4.2 Transmission Line and Related Structures Construction
  - 4.2.1 Transmission Line Access and Spur Roads
  - 4.2.2 Marshalling Yard/Staging Areas
  - 4.2.3 Temporary Bypass Facilities
  - 4.2.4 Construction of New 220 kV Transmission Structures
  - 4.2.5 Removal of Existing 220 kV Transmission Structure
  - 4.2.6 Wire Stringing of 220 kV Conductor
  - 4.2.7 Housekeeping and Construction Site Cleanup
    - Table 3: Ground Disturbance Table – Transmission Line Construction
  - 4.2.8 Operation and Maintenance
  - 4.2.9 Labor and Equipment
    - Table 4: Construction Equipment and Workforce Estimates by Activity-220 kV Loop-In Lines
    - Table 5: Construction Equipment and Workforce Estimates by Activity-220 kV Generation Tie Line Connection on SCE Property
    - Table 6: Construction Equipment and Workforce Estimates by Activity-Transmission Line Structure Removal

5.0 Distribution System for Station Light and Power
5.1 Distribution System Design and Equipment
Table 7: Construction Equipment and Workforce Estimates by Activity-12kV Hutt Station Light & Power
5.2 Distribution System Construction

6.0 Telecommunication System
6.1 Telecommunication System Design and Equipment
Table 8: Summary of Proposed Telecommunications Fiber Optic Cables Estimates
6.2 Telecommunication System Construction
Table 9: Telecommunications Labor Force and Construction Equipment Estimates
Table 10: Construction Equipment and Workforce Estimates by Activity – Construct Kramer-Victor Fiber Optic Cable
Table 11: Ground Disturbance Kramer-Victor Fiber-Optic Cable

7.0 Figures
Figure 1: Proposed New SCE Lockhart Substation Site
Figure 2: Proposed New SCE Lockhart Substation and Associated Electrical Lines
Figure 3-1: Overview of Proposed New Telecommunication Fiber Optic Cables for the Lockhart Project
Figure 3-2: Proposed New Telecommunication Fiber Optic Cable Connecting Kramer Substation to New Lockhart Substation
Figure 3-3: Proposed New Telecommunication Fiber Optic Cable Connecting New Lockhart Substation to Tortilla Substation
Figure 3-4: Proposed New Telecommunication Fiber Optic Cable Connecting Tortilla Substation to Coolwater Substation (Not Built – In Permitting Phase)
Figure 3-5: Proposed New Telecommunication Fiber Optic Cable Connecting New SCE Lockhart Substation to Abengoa Alpha and Beta Facilities
Figure 3-6: Proposed New Telecommunication Fiber Optic Cable Connecting Kramer Substation to Victor Substation
Figure 3-7: Proposed New Telecommunication Facility at Tortilla Substation
Figure 4-1: 220 kV Lattice Steel Tower Configuration
Figure 4-2: 220 kV Tubular Steel Pole Configuration
Figure 5: Distribution Pole Configuration
Figure 6: Cross Sections
Figure 7: Typical 115 kV H-Frame Subtransmission Structure

PROJECT DESCRIPTION

Abengoa Solar Inc. (Abengoa) applied to the California Independent System Operator (CAISO) for interconnection of a new 250 MW solar generation Lockhart Project currently referred to as the *Abengoa Mojave Solar Project* (AMSP). Abengoa requested and paid for Interconnection Studies in accordance with the CAISO Large Generation Interconnect Procedures (LGIP) Tariff. The CAISO assigned Queue Position 125 to the AMSP. All applicable interconnection studies have been completed for the AMSP, and Abengoa is currently negotiating the execution of the Large Generator Interconnection Agreement (LGIA) under an "Energy Only" service arrangement with the implementation of Special Protection System (SPS). Such service arrangement could result in the need to implement congestion management protocols which could result in the curtailment of generation resources in the area during times when total generation production in the area exceeds the total area transmission capability.

1.0 Project Overview

Southern California Edison (SCE) proposes to construct the Lockhart Substation and associated facilities to interconnect the 250 MW AMSP to SCE's existing Cool Water-Kramer No.1 220 kV transmission line (Lockhart Project). This project description is prepared for Abengoa for use in its California Energy Commission (CEC) Application for Certification (AFC) (docket 09-AFC-05) and Bureau of Land Management (BLM) Environmental Impact Statement (EIS). Major components of the Lockhart Project are summarized below:

- *Lockhart Substation*: Construct a new 220 kV Substation to loop-in the existing Cool Water-Kramer No. 1 220 kV transmission line and to provide two 220 kV line positions to terminate two new 220 kV generation tie lines (gen-ties) owned by AMSP.

- *Transmission Lines*: Loop the existing Cool Water-Kramer No. 1 220 kV transmission line into the new Lockhart Substation. The transmission loop would require construction of approximately 3,000 feet of new transmission line segments (comprised of two line segments of approximately 1,500 feet each) creating the new Lockhart-Kramer and Cool Water-Lockhart 220 kV transmission lines.

- *Generation Tie Line Connections*: Connect the two AMSP-built gen-ties into the SCE-owned Lockhart Substation. This work involves construction of two single spans of conductors between the Lockhart switchrack and the last AMSP-owned tower(s).

- *Distribution Systems*: Connect the existing Hutt 12 kV distribution circuit out of the Hutt Poletop Substation replacing one and removing one existing pole approximately 40 feet north of the Lockhart Substation. A range of approximately 200-400 feet of underground conduit would be installed from the replaced pole to the substation to provide a path for one of the two required sources of station light and power. Provide temporary power for the construction of both the proposed Lockhart Substation and the AMSP facilities.

- *Telecommunications Facilities*: Install fiber optic communication cables, associated poles, conduits, and other telecommunication facilities to provide diverse path routing of

communications required for the AMSP interconnection, and to provide communications redundancy at the two AMSP power blocks. Facilities would include construction of a telecommunications room at Tortilla Substation. Work would also include installing communication paths between the Victor, Roadway, Tortilla, Kramer, Lockhart, and Cool Water Substations.

This project description is based on planning level assumptions. Further details will be made available upon completion of preliminary and final engineering, identification of field conditions, verification of availability of materials and equipment, and compliance with applicable environmental and permitting requirements. With regards to construction work activities, SCE anticipates working typical construction schedules; however, the actual construction hours may vary.

2.0 Project Location

The Lockhart Substation would be located on private land within the boundaries of the new AMSP solar generation facility, approximately 5.5 miles north-east of the intersection of California State Highway 58 and Harper Lake Road in the County of San Bernardino (see Figure 1). At this time, the extent of the SCE portion of the overall facility property would be approximately 8 to 10 acres including the Lockhart Substation, minimum 10-foot wide safety buffers, access for new loop-in line segments, and two gen-ties. To accommodate the proposed Lockhart Substation location within Abengoa's identified property and to allow for future access to the substation, a corridor (transmission right-of-way (ROW)) would also be provided to SCE along the southern boundary of the AMSP paralleling the AMSP water drainage channel. Abengoa would provide temporary construction yards/staging areas, approximately 4 acres combined, necessary for substation, transmission, distribution systems, and telecommunication facilities to construct the Lockhart Project.

The electrical distribution system to provide station light and power would tap into the existing Hutt 12 kV distribution circuit that is in immediate proximity to the Lockhart Substation site.

The telecommunication facilities, needed to provide adequate line protection, would require the installation of new fiber optic cable from: 1) SCE's Kramer Substation to Lockhart Substation on an existing distribution pole line (see Figure 3-1), 2) SCE's proposed Lockhart Substation to SCE's Tortilla Substation on existing distribution pole lines and approximately 1,500 feet of new underground and approximately 11,000 feet of new overhead pole line (see Figure 3-2), 3) SCE's Tortilla Substation to SCE's Cool Water Substation on existing distribution pole lines (see Figure 3-2), and 4) SCE's Lockhart to the AMSP Alpha and Beta plant sites (two routes are required to each plant site as shown in Figure 3-4). In addition, a new telecommunication facility would be required within SCE's Tortilla Substation (see Figure 3-6).

Abengoa elected to interconnect to SCE's transmission system with the implementation of a Special Protection System (SPS). Implementation of the SPS would enable the AMSP to operate under an "Energy Only" service arrangement. The telecommunication facilities needed for the SPS would require the installation of new fiber optic cable from SCE's Victor Substation to

SCE's Kramer Substation on the existing Kramer-Victor 115 kV line (see Figure 3-5), and the installation of an optical repeater site would be required at SCE's Roadway Substation.

3.0 Lockhart Substation

The Lockhart Substation would be a 220 kV switching station with internal measurements of approximately 450 feet by 550 feet. Lockhart Substation would be an unattended collector station (no power transformation) surrounded by a wall or chain-link fence with two gates (see Figure 2).

3.1 Substation Design and Equipment

SCE would engineer, design, construct, and test the proposed Lockhart Substation. The substation would consist of a six-bay 220 kV switchrack. One bay position would be utilized to loop the SCE Cool Water-Kramer No. 1 220 kV transmission line. Two of the bays would be used to terminate the two AMSP gen-ties. The three remaining positions would be available for future use.

Lockhart Substation would be initially equipped with:

- Two (2) overhead 220 kV buses
- Seven (7) 220 kV circuit breakers
- 220 kV disconnect switches
- One (1) Mechanical Electrical Equipment Room (MEER)
- Light and power transformers
- Station lighting
- Back-up generator

3.2 Substation Construction

3.2.1 Grading and Ground Disturbance

Because the Lockhart Substation would be located within the boundaries of the AMSP, the grading of the substation site would be included within the solar developer's overall grading design. Therefore, SCE would neither prepare a grading and drainage plan, nor would SCE apply for grading permits from the County of San Bernardino. Prior to Abengoa's submittal of the site grading application to the County, SCE would review and approve that portion of the grading design pertaining to the substation location. Abengoa would carry out site grading in accordance with the developer's county approved grading plans.

Also, land disturbance areas and earth moving quantities, including vehicle emissions at the substation location are included within the AMSP facilities application.

Upon completion of the site preparation by the developer, SCE would assume responsibility for the remainder of the Lockhart Substation construction including the installation of a temporary chain-link fence surrounding the construction site.

Access to the substation site for both construction and operation would be gained through the solar facilities internal road network from its main access on Harper Lake Road. This internal road network would be paved as identified in the AMSP facility application.

Table 1 below provides the approximate area of land disturbance at the Lockhart Substation site within the substation fences, and the approximate volume and type of earth materials that would be used or disposed by SCE during Substation construction.

Table 1: Substation Materials and Estimated Volumes

Element	Material	Approximate Volume (yd^3)
Substation Equipment Foundations	Concrete	1,350
Equipment and cable trench excavations *	Soil	1,530
Cable Trenches**	Concrete	25
Internal Driveway	Asphalt concrete Class II aggregate base	440 630
Substation Rock Surfacing	Rock, nominal 1 to 1-1/2 inch per SCE Standard	2,400

Notes to Table 1

* Excavation "spoils" would be placed on site during the below-ground construction phase to the extent possible.

** Standard cable trench elements are factory fabricated, delivered to the site and installed by crane. Intersections are cast in place concrete.

3.2.2 Construction Yard/Staging Areas

Abengoa would provide a temporary staging yard, approximately 1.5 acres, necessary to construct the Lockhart Substation.

3.2.3 Geotechnical Studies

Prior to the start of construction, Abengoa would conduct a geotechnical study of the substation site and the transmission line routes, including an evaluation of the depth to the water table, evidence of faulting, liquefaction potential, physical properties of subsurface soils, soil resistivity, slope stability, and the presence of hazardous materials.

3.2.4 Below Grade Construction

After the substation site is graded, below grade facilities would be installed. Below grade facilities include a ground grid, underground conduit, trenches, and all required foundations. The design of the ground grid would be based on soil resistivity measurements collected during a geotechnical investigation prior to the construction.

3.2.5 Equipment Installation

Above grade installation of substation facilities (i.e., buses, circuit breakers, steel structures, and the MEER) would commence after the below grade structures are in place.

3.2.6 Hazards and Hazardous Materials

Construction and operation of the Lockhart Substation would require the limited use of hazardous materials such as fuels, lubricants, and cleaning solvents. SCE would comply with all applicable laws relating to hazardous materials use, storage, and disposal. A Stormwater Pollution Prevention Plan (SWPPP) would also be prepared by Abengoa for the Lockhart Substation Project.

3.2.7 Waste Management

Construction of the Lockhart Substation would result in the generation of various waste materials including soil, vegetation, and sanitation waste (portable toilets). Soil excavated for the Lockhart Substation site would either be used as fill or disposed of off-site at an appropriately licensed waste facility. Sanitation waste (i.e., human generated waste) would be disposed of according to the sanitation waste management practices.

3.2.8 Post-Construction Cleanup

Any damage to existing roads as a result of construction would be repaired, to the extent possible, once construction is completed in accordance with local agency requirements. Following completion of construction activities, SCE would also restore all areas that were temporarily disturbed by construction of the Lockhart Substation to as close to preconstruction conditions as possible, or where applicable, to the conditions agreed upon between the landowner and SCE. In addition, all construction materials and debris would be removed from the area and recycled or properly disposed of off-site. SCE would conduct a final inspection to ensure that cleanup activities were successfully completed.

3.2.9 Construction Equipment Personnel and Temporary Facilities

The estimated elements, materials, number of personnel and equipment required for construction of the Lockhart Substation are summarized below in Table 2 and include construction of the telecommunications room at Tortilla Substation. In addition to the information provided in Table 2, a temporary contractor office trailer and equipment trailer would be placed within the proposed substation construction area during the construction phase of the Lockhart Substation Project.

Construction would be performed by either SCE construction crews or its contractors. Contractor construction personnel would be managed by SCE construction management personnel. SCE anticipates a total of approximately 14 construction personnel working on any given day. SCE also anticipates that crews would work concurrently whenever possible; however, the estimated deployment and number of crew members would be dependent upon

County permitting, material availability, and construction scheduling. For example, electrical equipment (such as substation MEER, wiring, and circuit breaker) installation may occur while transmission line construction would be proceeding.

Table 2: Construction Equipment and Personnel Use Estimations

Activity and number of Personnel	Number of Work Days	Equipment and Quantity	Duration of Use (Hours/Day)
Survey (2 people)	10	2-Survey Trucks (Gasoline)	8
Grading (8 people)	40	1-Dozer (Diesel)	4
		2-Loader (Diesel)	4
		1-Scraper (Diesel)	3
		1-Grader (Diesel)	3
		1-Water Truck (Diesel)	2
		2-4X4 Backhoe (Diesel)	2
		1-4X4 Tamper (Diesel)	2
		1-Tool Truck (Gasoline)	2
		1-Pickup 4X4 (Gasoline)	2
Fencing (4 people)	25	1-Bobcat (Diesel)	8
		1-Flatbed Truck (Gasoline)	2
		1-Crewcab Truck (Gasoline)	4
Civil (8 people)	70	1-Excavator (Diesel)	4
		1-Foundationauger (Diesel)	5
		2-Backhoes (Diesel)	3
		1-Dump truck (Diesel)	2
		1-Cement truck (Diesel)	2
		1-Skip Loader (Diesel)	3
		1-Water Truck (Diesel)	3
		2-Bobcat Skid Steer (Diesel)	3
		1-Forklift (Propane)	4
		1-17TonCrane (Diesel)	2 hours/day for 45 days
		1-Tool Truck (Gasoline)	3
MEER (4 people)	40	1-Carry-all Truck (Gasoline)	3
		1-Stake Truck (Gasoline)	2
Electrical (8 people)	90	2-Scissor Lifts (Propane)	3
		2-Manlifts (Propane)	3
		1-Reach Manlift (Propane)	4
		1-15 ton Crane (Diesel)	3
		1-Tool Trailer	3
		2-Crew Trucks (Gasoline)	2

Activity and number of Personnel	Number of Work Days	Equipment and Quantity	Duration of Use (Hours/Day)
Wiring (2 people)	50	1-Manlift (Propane) 1-Tool Trailer	4 3
Maintenance Crew Equipment Check (2 people)	45	2-MaintenanceTrucks (Gasoline) 1- Wiring Truck (Gasoline)	4 3
Testing (2 people)	80	1-Crew Truck (Gasoline)	3
Asphalting (6 people)	50	2-Paving Roller (Diesel) 1-Asphalt Paver (Diesel) 1-Stake Truck (Gasoline) 1-Tractor (Diesel) 1-Dump Truck (Diesel) 2-Crew Trucks (Gasoline) 1-Asphalt Curb Machine (Diesel)	4 4 4 3 3 2 3

4.0 Transmission Lines and Related Structures

SCE's transmission line requirements for the Lockhart Substation interconnection to the Cool Water-Kramer No. 1 220 kV transmission line would consist of the following components: 1) 220 kV transmission line loop-in, 2) existing 220 kV transmission line structure modification/replacement, and 3) 220 kV gen-tie extension. Each of these components is described below.

4.1 Transmission Line and Related Structures Design and Equipment

4.1.1 220 kV Transmission Line Loop-In Design

The proposed Lockhart Substation would be connected to the Coolwater-Kramer No. 1 220 kV transmission line via loop-in transmission segments. The two loop-in line segments would create two new separate transmission lines: the Coolwater-Lockhart 220 kV transmission line; and the Kramer-Lockhart 220 kV transmission line. Each transmission line segment into the Lockhart Substation would be approximately 1,500 feet long (see Figure 2).

The proposed loop-in of the existing Coolwater-Kramer No. 1 220 kV transmission line would require approximately four double circuit transmission structures to enter the Lockhart Substation. The exact combination of new tubular steel poles (TSP) and/or lattice steel towers (LST) needed for the loop-in would be determined during detailed engineering (see Figures 4-1 and 4-2).

Two of the 220 kV double circuit structures would be constructed just outside of the substation fence or wall. The other two structures would be used to re-route the Coolwater-Kramer No. 1 220 kV transmission line into Lockhart Substation. The conductor utilized would be a single 1590 kcmil "Lapwing" ACSR conductor per phase.

The section of line connecting the existing Coolwater-Kramer No. 1 220 kV transmission line to the first structure outside of Lockhart Substation would require a new right of way, as shown in Figure 2, between SCE's existing ROW and the new Lockhart Substation facilities.

4.1.2 Existing 220 kV Transmission Line Structure Modification/Replacement Design

To support the loop-in, one existing double circuit transmission structure may need to be removed. However, the exact number of towers to be removed would be determined during detailed engineering.

4.1.3 220 kV Generation Tie Line Extension Design

The proposed Lockhart Substation design would involve bringing two 220 kV gen-tie segments into a 220 kV position. SCE understands that there would be one customer-owned double circuit structure outside the SCE-owned Lockhart Substation facilities to support connection of the two customer gen-ties.

SCE's scope of work would involve connecting the gen-ties from the customer owned dead end structures to the appropriate 220 kV position inside Lockhart Substation. The span needed for this connection is estimated to be up to 300 feet depending on the location of the transmission line tower relative to Lockhart Substation. The conductor utilized would be a single 1590 kcmil "Lapwing" Aluminum Conductor Steel Reinforced (ACSR) per phase.

4.2 Transmission Line and Related Structures Construction

Construction activities would consist of the receiving and handling of construction materials, rehabilitation of existing and creation of new access roads for construction activities, site preparation, assembly and erection of structures, removal of existing structure(s), stringing of conductors, and site cleanup.

4.2.1 Transmission Line Access and Spur Roads

This portion of the Lockhart Substation Project would involve construction within existing and new ROWs. Existing public roads, as well as existing transmission line roads would be used as much as possible during construction of this project. However, the project would require new transmission line roads to access the new transmission line segments and structure locations. Transmission line roads are classified into two groups; access roads and spur roads. Access roads are through roads that run between tower sites along a ROW and serve as the main transportation route along line ROWs. Spur roads are roads that lead from access roads and terminate at one or more structure sites.

Rehabilitation work may be necessary in some locations along the existing transmission line roads to accommodate construction activities. This work may include the re-grading and repair of existing access, spur roads and associated drainage hardware. These roads would be cleared of vegetation; blade-graded to remove potholes, ruts, and other surface irregularities; and re-compacted to provide a smooth and dense riding surface capable of supporting heavy construction equipment. The graded road would have a minimum drivable width of 14 feet with 2 feet of shoulder on each side (depending upon field conditions).

Similar to rehabilitation of existing roads, all new road alignments would first be cleared and grubbed of vegetation; roads would be blade-graded to remove potholes, ruts, and other surface irregularities; fill material would be deposited where necessary; and roads would be re-compacted to provide a smooth and dense riding surface capable of supporting heavy construction equipment. The graded road would have a minimum drivable width of 14 feet with 2 feet of shoulder on each side, but may be wider depending on final engineering requirements and field conditions. New road gradients would be leveled so that any sustained grade would not exceed 12 percent. Drainage hardware would be installed where necessary to ensure adequate drainage of the road to reduce erosion and rutting. All curves would have a radius of curvature of not less than 50 feet measured at the center line of the usable road surface. The new roads would typically have turnaround areas near the structure locations.

4.2.2 Marshalling Yard/Staging Areas

A marshalling yard would be required for the construction of the transmission line loop-in segments and the gen-tie connection to SCE's proposed Lockhart Substation. A temporary equipment and material staging area would also be established for short-term utilization within AMSP property as needed.

Equipment and materials to be stored at the temporary equipment and material staging area may include:

- Construction trailer
- Construction equipment
- Conductor/wire reels
- Transmission structure components
- Overhead ground wire/Optical ground wire cable
- Hardware
- Insulators
- Consumables, such as fuel and joint compound
- Portable sanitation facilities
- Waste materials for salvaging, recycling, and/or disposal

The size of the temporary equipment and material staging area would be dependent upon a detailed site inspection and would take into account, where practical, suggestions by the SCE crew foreman or the SCE contractor selected to do the work. An area of approximately 0.5 to 1.5 acres would be required. Additional temporary areas may be required for crew "show up" yards and would be used for temporary parking. Land disturbed at the temporary equipment and

material staging area would be restored, to the extent possible, to preconstruction conditions following the completion of construction.

4.2.3 Temporary Bypass Facilities

SCE may temporarily transfer the existing Coolwater-Kramer No 2 220 kV conductor to temporary structures during the removal and replacement of the existing Coolwater-Kramer No. 1 220 kV structures. Upon completion of the construction of the 220 kV replacement structures and dismantling of the existing 220 kV structure to a level below the conductor attachment height, the existing conductor would be transferred over from the temporary structures and attached to the new 220 kV structures. The exact number of temporary transmission structures and the related ground disturbance would not be known until final engineering is performed.

4.2.4 Construction of New 220 kV Transmission Structures

The proposed sites for the new structures would first be graded and/or cleared of vegetation as required to provide a reasonably level and vegetation-free surface for footing and structure construction. The temporary laydown area, approximately 200 feet by 200 feet (0.92 acre), required for the assembly of the structures would also be cleared of vegetation and graded as required to provide a reasonably level and vegetation-free surface for the laydown, assembly, and erection of the structures. Erection of the structure would require an erection crane to be set up adjacent to and 60 feet from the centerline of the structure. A crane pad would be located within the laydown area used for structure assembly. If the existing terrain is not suitable to support crane activities, a temporary 50 feet by 50 feet (0.06 acre) crane pad would be constructed.

The structures would require drilled, poured-in-place, concrete footings that would form the structure foundation. Actual footing diameters and depths for each of the structure foundations would depend on the soil conditions and topography at the site and would be determined during final engineering.

The foundation process starts with the excavation of the hole for the structure. The hole would be excavated using truck or track-mounted auger with various diameter augers to match the diameter requirements of the structure. The excavated material would be distributed at the structure site, used as fill for the new roads or substation site, or used in the rehabilitation of existing access roads. Alternatively, the excavated soil may be disposed of at an off-site disposal facility in accordance with all applicable laws.

Following excavation of the foundation footing for each structure, steel reinforced rebar cage(s) would be set in the excavated footing holes, anchor bolts and/or stub angles would be set in place, precision would be verified by a surveyor, and concrete would then be placed. The steel reinforced rebar cage(s) would be assembled off site and delivered to the structure location by flatbed truck. A typical transmission structure would require approximately 50-80 cubic yards of concrete delivered to the structure location depending upon the type of structure being constructed, soil conditions, and topography at each site. The transmission structure footings would project approximately 1-4 feet above the ground level.

During construction, existing commercial ready-mix concrete supply facilities would be used where feasible. If commercial ready-mix concrete supply facilities do not exist within the general area of need, a temporary concrete batch plant would be set up. If necessary, approximately two acres of land would be sub-partitioned from the temporary equipment and material staging area within the Lockhart Substation site/property for a temporary concrete batch plant. Equipment would include a central mixer unit (drum type); three silos for injecting concrete additives, fly ash, aggregate, and cement; a water tank; portable pumps; a pneumatic injector; and a loader for handling concrete additives not in the silos. Dust emissions would be controlled by watering the area and by sealing the silos and transferring the fine particulates pneumatically between the silos and the mixers.

The assembly would consist of hauling the structure components from the staging yard to their designated structure location using semi-trucks with 40-foot trailers and off loaded at site. Crews would then assemble portions of each structure on the ground at the structure location, while on the ground, the top section may be pre-configured with the necessary insulators and wire-stringing hardware before being set in place. An 80-ton all-terrain or rough-terrain crane would be used to position the base section on top of previously prepared foundation. When the base section is secured, the remaining portions of the structure would then be placed upon the base section and bolted together.

After construction is completed, the transmission structure site would be graded such that water would run toward the direction of the natural drainage. In addition, drainage would be designed to prevent ponding and erosive water flows that could cause damage to the structure footing. The graded area would be compacted and would be capable of supporting heavy vehicular traffic.

4.2.5 Removal of Existing 220 kV Transmission Structure

Transmission line facilities planned to be removed would include an existing 220 kV transmission structure, and associated hardware (i.e. insulators, vibration dampeners, suspension clamps, ground wire clamps, shackles, links, nuts, bolts, washers, cotters pins, insulator weights, and bond wires). The existing access routes would be used to reach the structure site, but some rehabilitation work on these routes may be necessary before removal activities begin. In addition, grading may be necessary to establish a temporary laydown area approximately 150 feet by 150 feet (0.52 acre) adjacent to the existing structure for equipment and material staging during the structure removal. A crane truck or rough terrain crane would be used to support the structure during dismantle and removal. A crane pad would be located within the laydown area used for structure assembly. If the existing terrain is not suitable to support crane activities, a temporary 50 feet by 50 feet (0.06 acre) crane pad would be constructed. The existing structure footings would be removed to a depth of approximately 2 feet below ground level. Holes would be filled, compacted, and the area would be smoothed to match surrounding grade.

SCE may temporarily transfer the existing 220 kV conductor to temporary structures during the removal and replacement of the existing 220 kV structure. Upon completion of the construction of the 220 kV replacement structures and dismantling of the existing 220 kV structure to a level

below the conductor attachment height, the existing conductor would be transferred over from the temporary structures and attached to the new 220 kV structures.

4.2.6 Wire-Stringing of 220 kV Conductor

Wire-stringing would include all activities associated with the installation of conductors, including the installation of primary conductor and overhead ground wire (OHGW), vibration dampeners, weights, spacers, and suspension and dead-end hardware assemblies. Insulators and stringing sheaves (rollers or travelers) would be typically attached during the steel erection process.

A standard wire-stringing plan would include a sequence of events starting with determination of wire pulls and wire pull equipment set-up positions. Advanced planning by supervision determines circuit outages, pulling times, and safety protocols to ensure that safe and effective installation of wire is accomplished.

Wire-stringing activities would be conducted in accordance with SCE specifications that are similar to process methods detailed in Institute of Electrical and Electronics Engineers Standard 524-2003, Guide to the Installation of Overhead Transmission Line Conductors.

Wire pulls would include the length of any given continuous wire installation process between two selected points along the line. Wire pulls would be selected, where possible, based on availability of dead-end structures at the ends of each pull, geometry of the line as affected by points of inflection, terrain, and suitability of stringing and splicing equipment setups. In some cases, it may be preferable to select an equipment setup position between two suspension structures. Anchor rods would then be installed to provide dead-ending capability for wire sagging purposes, and also to provide a convenient splicing area.

To ensure the safety of workers and the public, safety devices such as traveling grounds, guard structures, and radio-equipped public safety roving vehicles and linemen would be in place prior to the initiation of wire-stringing activities.

The following four steps describe the wire installation activities proposed by SCE:

- Step 1: Sock Line, Threading: Typically, a lightweight sock line would be passed from structure to structure, which would be threaded through the wire rollers in order to engage a camlock device that would secure the pulling sock in the roller. This threading process would continue between all structures through the rollers of a particular set of spans selected for a conductor pull.

- Step 2: Pulling: The sock line would be used to pull-in the conductor pulling cable. The conductor pulling cable would be attached to the conductor using a special swivel joint to prevent damage to the wire and to allow the wire to rotate freely to prevent complications from twisting as the conductor unwinds off the reel. A piece of hardware known as a running board would be installed to properly feed the conductor into the roller. This device keeps the bundle conductor from wrapping during installation.

- Step 3: Splicing, Sagging, and Dead-ending: After the conductor is pulled-in, the conductor would be sagged to proper tension and dead-ended to structures.

- Step 4: Clipping-in, Spacers: After the conductor is dead-ended, the conductors would be secured to all tangent structures; a process called clipping in. Once this is complete, spacers, if applicable, would be attached between the bundled conductors of each phase to keep uniform separation between each conductor.

The dimensions of the area needed for the stringing setups associated with wire installation are variable and depend upon terrain. The preferred minimum area needed for tensioning equipment set-up sites would require approximately 150 feet by 500 feet (1.72 acres). The preferred minimum area needed for pulling equipment set-up sites would require approximately 150 feet by 300 feet (1.03 acres). Crews though can work from within slightly smaller areas when space is limited. Each stringing operation would include one puller positioned at one end and one tensioner and wire reel stand truck positioned at the other end.

Stringing equipment that cannot be positioned at either side of a dead-end transmission structure would require installation of temporary field snubs (i.e. anchoring and dead-end hardware) to sag conductor wire to the correct tension.

The puller and tensioner set-up locations would require level areas to allow for maneuvering of the equipment. When possible, these locations would be located on existing level areas and existing roads to minimize the need for grading and cleanup. The final number and locations of the puller and tensioner sites would be determined during detailed engineering for the Lockhart Project based on the construction methods chosen by SCE or its contractor.

An overhead ground wire (OHGW) or optical ground wire (OPGW) for shielding would be installed on the transmission line and would be installed in the same manner as the conductor. The OHGW or OPGW would typically be installed in conjunction with the conductor, depending upon various factors including line direction, inclination, and accessibility.

4.2.7 Housekeeping and Construction Site Cleanup

During construction, water trucks may be used to minimize the quantity of airborne dust created by construction activities. Any damage to existing roads as a result of construction would be repaired, to the extent possible, once construction is complete.

SCE would restore, to the extent possible, all areas that are temporarily disturbed by Lockhart Substation Project activities (including equipment and material staging yard, pull and tension sites, and structure laydown and assembly sites) to preconstruction conditions following the completion of construction. Restoration may include grading and restoration of sites to original contours and reseeding where appropriate. In addition, all construction materials and debris would be removed from the area and recycled or properly disposed of at an off-site disposal facility in accordance with all applicable laws. SCE would conduct a final inspection to ensure that cleanup activities are successfully completed.

Table 3 below provides information on temporary and permanent land disturbance areas related to construction of the transmission lines.

Table 3: Ground Disturbance Table – Transmission Line Construction

Lockhart Project Feature	Site Quantity	Disturbed Acreage Calculation (L x W)	Acres Disturbed During Construction	Acres to be restored	Acres Permanently Disturbed
Modify Existing 220 kV Lattice Steel Tower (1)	0	150' x 150'	0	0	0.000
Remove Existing 220 kV Lattice Steel Tower (1)	1	150' x 150'	0.517	0.517	0.000
Temporary Conductor Field Snub/Transfer Area (2)	6	200' x 150'	4.132	4.132	0.000
Construct New 220 kV Lattice Steel Tower (3)	4	200' x 200'	1.837	1.200	0.637
Construct New 220 kV Gen-Tie Structure (5)	0	200' x 200'	0	0	0.000
Conductor & OHGW Stringing Setup Area - Puller (6)	3	300' x 150'	3.099	3.099	0.000
Conductor & OHGW Stringing Setup Area - Tensioner (7)	3	500' x 150'	5.165	5.165	0.000
New Access/Spur Roads (8)	0.6	linear miles x 14' wide	1.018	0.000	1.018
Lockhart Sub - Material & Equipment Staging Area	1	approx. 1.5 acres	1.500	1.500	0.000
Total Estimated (6)			17.268	15.613	1.6552

Notes to Table 3:

1. Includes the removal of existing conductor, teardown of existing structure, and removal of foundation 2' below ground surface.
2. Includes area needed for temporary conductor transfer towers and/or conductor removal, field snubs, and splicing new conductor; area to be restored after construction.
3. Includes foundation installation, structure assembly & erection, and conductor & OHGW attachment; a majority of the area to be restored after construction; a portion of ROW beneath and within 35' of the LST to remain permanently cleared of vegetation and access area of 25' around structure; area to be permanently disturbed for each 220 kV LST equals 0.3183 acres.
4. Includes foundation installation, structure assembly & erection, and conductor & OHGW attachment; a majority of the area to be restored after construction; a portion of ROW beneath and within 25' of the LST to remain permanently cleared of vegetation and access area of 25' around structure; area to be permanently disturbed for each LST equals 0.2173 acres.
5. Includes foundation installation, structure assembly & erection, and conductor & OHGW attachment; a majority of the area to be restored after construction; a portion of area within 25' of the structure to remain permanently cleared of vegetation; approximately 0.057 acre would be permanently disturbed for the structure.
6. Based on 9,000' conductor reel lengths, number of circuits, and route design.
7. Based on length of road in miles x road width of 14'.
8. The disturbed acreage calculations are estimates based upon SCE's preferred area of use for the described Project feature, the width of the existing right-of-way, or the width of the proposed right-of-way and, they do not include any new access/spur road information; they are subject to revision based upon final engineering and review of the Project by SCE's Construction Manager and/or Contractor awarded the Project.

Note: All data provided in this table is based on planning level assumptions and may change following completion of more detailed engineering, identification of field conditions, availability of material, and equipment, and any environmental and/or permitting requirements.

4.2.8 Operation and Maintenance

Following the completion of Lockhart Project construction, operation and maintenance of the new lines would commence. SCE would conduct operation, inspection, and maintenance activities at least once a year, in compliance with CPUC General Order No. 165. The frequency of inspection and maintenance activities would depend upon weather effects and any unique problems that may arise due to such variables as substantial storm damage or vandalism.

4.2.9 Labor and Equipment

Construction of the Lockhart Project would be performed by SCE crews or its contract personnel and supervised by SCE's Lockhart Substation Project administration and inspection. The estimated number of persons and types of equipment required for each phase of transmission line construction for the Lockhart Substation Project is shown in Tables 4, 5, and 6 below.

TABLE 4

CONSTRUCTION EQUIPMENT AND WORKFORCE ESTIMATES BY ACTIVITY TO CONSTRUCT NEW 220 KV LOOP-IN LINES

LOCKHART SUBSTATION PROJECT

Work Activity				Activity Production			
Primary Equipment Description	Estimated Horse-Power	Probable Fuel Type	Primary Equipment Quantity	Estimated Workforce	Estimated Schedule (Days)	Duration of Use (Hrs/Day)	Estimated Production Per Day
Survey (1)				**4**	**6**		**0.5 Miles**
3/4-Ton Pick-up Truck, 4x4	200	Gas	2		6	8	1 Mile/Day and Construction Support
Temporary Equipment & Material Staging Area (2)				**4**			
1-Ton Crew Cab, 4x4	300	Diesel	1		Duration of Project	2	
30-Ton Crane Truck	300	Diesel	1			2	
Water Truck	350	Diesel	1				
10,000 lb Rough Terrain Fork Lift	200	Diesel	1			5	
Truck, Semi, Tractor	350	Diesel	1			1	
Roads & Landing Work (4)				**5**	**4**		**0.5 Miles & 4 Pads**
1-Ton Crew Cab, 4x4	300	Diesel	2		4	2	0.5 Miles/Day & 0.66 Structure Pads/Day
Road Grader	350	Diesel	1		4	4	
Backhoe/Front Loader	350	Diesel	1		4	6	
10-cu. yd. Dump Truck	350	Diesel	2		4	8	

TABLE 4

CONSTRUCTION EQUIPMENT AND WORKFORCE ESTIMATES BY ACTIVITY TO CONSTRUCT NEW 220 KV LOOP-IN LINES

LOCKHART SUBSTATION PROJECT

Work Activity				Activity Production			
Primary Equipment Description	Estimated Horse-Power	Probable Fuel Type	Primary Equipment Quantity	Estimated Workforce	Estimated Schedule (Days)	Duration of Use (Hrs/Day)	Estimated Production Per Day
Drum Type Compactor	250	Diesel	1		4	4	
Track Type Dozer	350	Diesel	1		4	6	
Lowboy Truck/Trailer	500	Diesel	2		2	2	
Install LST Foundations (5)				**9**	**6**		**4 LSTs**
1-Ton Crew Cab Flat Bed, 4x4	300	Diesel	2		6	2	
30-Ton Crane Truck	300	Diesel	1		6	5	
Backhoe/Front Loader	200	Diesel	1		6	8	0.50 LST/Day
Auger Truck	500	Diesel	1		6	8	
10-cu. yd. Dump Truck	350	Diesel	2		6	8	
10-cu. yd. Concrete Mixer Truck	425	Diesel	4		4	5	
LST Steel Haul (6)				**6**	**4**		**4 LSTs**
1-Ton Crew Cab Flat Bed, 4x4	300	Diesel	2		4	2	
10,000 lb Rough Terrain Fork Lift	200	Diesel	1		4	6	1 LST/Day
40' Flat Bed Truck/ Trailer	350	Diesel	1		4	8	
LST Steel Assembly (7)				**14**	**11**		**4 LSTs**
3/4-Ton Pick-up Truck, 4x4	300	Diesel	3		11	4	
1-Ton Crew Cab Flat Bed, 4x4	300	Diesel	2		11	4	
10,000 lb Rough Terrain Fork Lift	200	Diesel	1		11	6	0.25 LST/Day
30-Ton Crane Truck	300	Diesel	2		11	8	
Compressor Trailer	350	Diesel	2		11	6	
LST Erection (8)				**8**	**16**		**4 LSTs**
3/4-Ton Pick-up Truck, 4x4	300	Diesel	2		16	5	0.13 LST/Day
1-Ton Crew Cab Flat Bed, 4x4	300	Diesel	2		16	5	

TABLE 4

CONSTRUCTION EQUIPMENT AND WORKFORCE ESTIMATES BY ACTIVITY TO CONSTRUCT NEW 220 KV LOOP-IN LINES

LOCKHART SUBSTATION PROJECT

Work Activity				Activity Production			
Primary Equipment Description	Estimated Horse-Power	Probable Fuel Type	Primary Equipment Quantity	Estimated Workforce	Estimated Schedule (Days)	Duration of Use (Hrs/Day)	Estimated Production Per Day
Compressor Trailer	120	Diesel	1		16	6	
80-Ton Rough Terrain Crane	350	Diesel	1		16	6	
Install Conductor & OHGW (9)				**16**	**6**		**0.6 Circuit Miles**
3/4-Ton Pick-up Truck, 4x4	300	Diesel	2		6	8	
1-Ton Crew Cab Flat Bed, 4x4	300	Diesel	2		6	8	
Wire Truck/Trailer	350	Diesel	2		6	2	
Dump Truck (Trash)	350	Diesel	1		5	2	
20,000 lb. Rough Terrain Fork Lift	350	Diesel	1		6	2	
22-Ton Manitex	350	Diesel	1		6	8	
30-Ton Manitex	350	Diesel	2		6	6	
Splicing Rig	350	Diesel	1		6	2	
Splicing Lab	300	Diesel	1		4	2	0.25 miles/day
Spacing Cart	10	Diesel	1		4	8	
Static Truck/ Tensioner	350	Diesel	1		6	2	
3 Drum Straw line Puller	300	Diesel	1		6	4	
60lk Puller	525	Diesel	1		6	3	
Sag Cat w/ 2 winches	350	Diesel	1		6	2	
580 Case Backhoe	120	Diesel	1		6	2	
D8 Cat	300	Diesel	1		6	3	
Lowboy Truck/Trailer	500	Diesel	1		6	2	
Restoration (10)				**7**	**3**		**0.5 Miles**
1-Ton Crew Cab, 4x4	300	Diesel	2		3	2	
Road Grader	350	Diesel	1		3	6	
Backhoe/Front Loader	350	Diesel	1		3	6	
Drum Type Compactor	250	Diesel	1		3	6	0.5 Mile/Day
Track Type Dozer	350	Diesel	1		3	6	
Lowboy Truck/Trailer	300	Diesel	1		3	3	

TABLE 5

CONSTRUCTION EQUIPMENT AND WORKFORCE ESTIMATES BY ACTIVITY TO CONSTRUCT NEW 220 KV GEN-TIE CONNECTION ON SCE PROPERTY

LOCKHART SUBSTATION PROJECT

Work Activity				Activity Production			
Primary Equipment Description	Estimated Horse-Power	Probable Fuel Type	Primary Equipment Quantity	Estimated Workforce	Estimated Schedule (Days)	Duration of Use (Hrs/Day)	Estimated Production Per Day
Survey (1)				**4**	**2**		**500 feet**
3/4-Ton Pick-up Truck, 4x4	200	Gas	2		2	8	1 Mile/Day
Temporary Equipment & Material Staging Area (2)				**4**			
1-Ton Crew Cab, 4x4	300	Diesel	1		Duration of Project	2	
Water Truck	350	Diesel	1			8	
30-Ton Crane Truck	300	Diesel	1			2	
10,000 lb Rough Terrain Fork Lift	200	Diesel	1			5	
Truck, Semi, Tractor	350	Diesel	1			1	
Roads & Landing Work (3)				**5**	**2**		**0.1 Miles & 1 Pad**
1-Ton Crew Cab, 4x4	300	Diesel	2		2	2	0.5 Miles/Day & 2 Structure Pads/Day
Road Grader	350	Diesel	1		1	4	
10-cu. yd. Dump Truck	350	Diesel	2		2		
Backhoe/Front Loader	350	Diesel	1		2	6	
Drum Type Compactor	250	Diesel	1		2	4	
Track Type Dozer	350	Diesel	1		2	6	
Lowboy Truck/Trailer	500	Diesel	2		2	2	
Install TSP Foundation (4)				**7**	**2**		**1 TSP**
1-Ton Crew Cab Flat Bed, 4x4	300	Diesel	3		2	2	2 TSPs/Day
30-Ton Crane Truck	300	Diesel	1		2	5	
Backhoe/Front Loader	200	Diesel	1		1	8	
Auger Truck	500	Diesel	1		2	8	
10-cu. yd. Dump Truck	350	Diesel	2		2	8	
10-cu. yd. Concrete Mixer Truck	425	Diesel	3		1	3	
TSP Haul (5)				**3**	**1**		**1 TSP**
3/4-Ton Pick-up Truck, 4x4	300	Diesel	1		1	5	4 TSPs/Day

TABLE 5

CONSTRUCTION EQUIPMENT AND WORKFORCE ESTIMATES BY ACTIVITY TO CONSTRUCT NEW 220 KV GEN-TIE CONNECTION ON SCE PROPERTY

LOCKHART SUBSTATION PROJECT

Work Activity				Activity Production			
Primary Equipment Description	Estimated Horse-Power	Probable Fuel Type	Primary Equipment Quantity	Estimated Workforce	Estimated Schedule (Days)	Duration of Use (Hrs/Day)	Estimated Production Per Day
Flat Bed Truck/Trailer	350	Diesel	1		1	8	
80-Ton Rough Terrain Crane	350	Diesel	1		1	6	
TSP Assembly (6)				**8**	**1**		**1 TSP**
3/4-Ton Pick-up Truck, 4x4	300	Diesel	2		1	5	
1-Ton Crew Cab Flat Bed, 4x4	300	Diesel	2		1	5	2 TSPs/Day
Compressor Trailer	120	Diesel	1		1	5	
80-Ton Rough Terrain Crane	350	Diesel	1		1	6	
TSP Erection (7)				**8**	**1**		**1 TSP**
3/4-Ton Pick-up Truck, 4x4	300	Diesel	2		1	5	
1-Ton Crew Cab Flat Bed, 4x4	300	Diesel	2		1	5	2 TSPs/Day
Compressor Trailer	120	Diesel	1		1	5	
80-Ton Rough Terrain Crane	350	Diesel	1		1	6	
Install Conductor & OPGW (8)				**16**	**4**		**0.1 Circuit Miles**
3/4-Ton Pick-up Truck, 4x4	300	Diesel	4		4	8	0.2 miles/day
1-Ton Crew Cab Flat Bed, 4x4	300	Diesel	4		4	8	
Wire Truck/Trailer	350	Diesel	4		2	2	
Dump Truck (Trash)	350	Diesel	1		4	2	
20,000 lb. Rough Terrain Fork Lift	350	Diesel	1		4	2	
22-Ton Manitex	350	Diesel	1		4	8	
30-Ton Manitex	350	Diesel	4		4	6	
Splicing Rig	350	Diesel	2		4	2	
Splicing Lab	300	Diesel	2		2	2	
Spacing Cart	10	Diesel	2		2	8	
Static Truck/ Tensioner	350	Diesel	1		2	2	
3 Drum Straw line Puller	300	Diesel	2		2	4	

TABLE 5

CONSTRUCTION EQUIPMENT AND WORKFORCE ESTIMATES BY ACTIVITY TO CONSTRUCT NEW 220 KV GEN-TIE CONNECTION ON SCE PROPERTY

LOCKHART SUBSTATION PROJECT

Work Activity				Activity Production			
Primary Equipment Description	Estimated Horse-Power	Probable Fuel Type	Primary Equipment Quantity	Estimated Workforce	Estimated Schedule (Days)	Duration of Use (Hrs/Day)	Estimated Production Per Day
60lk Puller	525	Diesel	1		2	3	
Sag Cat w/ 2 winches	350	Diesel	2		2	2	
580 Case Backhoe	120	Diesel	1		4	2	
D8 Cat	300	Diesel	2		2	3	
Lowboy Truck/Trailer	500	Diesel	1		4	2	
Restoration (9)				**7**	**3**		**0.5 Miles**
1-Ton Crew Cab, 4x4	300	Diesel	2		3	2	
Road Grader	350	Diesel	1		1	6	
Backhoe/Front Loader	350	Diesel	1		1	6	
Drum Type Compactor	250	Diesel	1		1	6	0.5 Mile/Day
Track Type Dozer	350	Diesel	1		1	6	
Lowboy Truck/Trailer	300	Diesel	1		3	3	

TABLE 6

CONSTRUCTION EQUIPMENT AND WORKFORCE ESTIMATES BY ACTIVITY TRANSMISSION LINE STRUCTURE REMOVAL

Work Activity				Activity Production			
Primary Equipment Description	Estimated Horse-Power	Probable Fuel Type	Primary Equipment Quantity	Estimated Workforce	Estimated Schedule (Days)	Duration of Use (Hrs/Day)	Estimated Production Per Day
Temporary Equipment & Material Staging Area(2)				**4**			
1-Ton Crew Cab, 4x4	300	Diesel	1		Duration of Project	2	
30-Ton Crane Truck	300	Diesel	1			2	
Water Truck	350	Diesel	1			8	
10,000 lb Rough Terrain Fork Lift	200	Diesel	1			5	
Truck, Semi, Tractor	350	Diesel	1			1	
Roads & Landing Work (3)				**5**	**2**		**.5 Miles & 3 Pads**
1-Ton Crew Cab, 4x4	300	Diesel	2		2	2	
Road Grader	350	Diesel	1		2	4	
Backhoe/Front Loader	350	Diesel	1		2	6	
Drum Type Compactor	250	Diesel	1		2	4	0.5 Miles/Day & 2 Structure Pads/Day
Track Type Dozer	350	Diesel	1		2	6	
Excavator	300	Diesel	1		2	6	
Lowboy Truck/Trailer	500	Diesel	1		2	2	
LST Removal (4)				**8**	**2**		**1 LSTs**
3/4-Ton Pick-up Truck, 4x4	300	Diesel	2		2	6	
1-Ton Crew Cab Flat Bed, 4x4	300	Diesel	2		2	6	0.75 LST/Day
Compressor Trailer	120	Diesel	1		2	6	
80-Ton Rough Terrain Crane	350	Diesel	1		2	6	
Remove Foundations (5)				**9**	**1**		**3 LSTs**
1-Ton Crew Cab Flat Bed, 4x4	300	Diesel	2		1	2	0.50 LST/Day
Backhoe/Front Loader	200	Diesel	1		6	8	
Auger Truck	500	Diesel	1		8	8	
10-cu. yd. Dump Truck	350	Diesel	2		8	8	

TABLE 6

CONSTRUCTION EQUIPMENT AND WORKFORCE ESTIMATES BY ACTIVITY TRANSMISSION LINE STRUCTURE REMOVAL

Work Activity				Activity Production			
Primary Equipment Description	Estimated Horse-Power	Probable Fuel Type	Primary Equipment Quantity	Estimated Workforce	Estimated Schedule (Days)	Duration of Use (Hrs/Day)	Estimated Production Per Day
Compressor Trailer	120	Diesel	1		2	6	
LST Steel Haul (6)				**4**	**1**		**3 LSTs**
1-Ton Crew Cab Flat Bed, 4x4	300	Diesel	1		1	2	
10,000 lb Rough Terrain Fork Lift	200	Diesel	1		1	6	1 LST/Day
40' Flat Bed Truck/ Trailer	350	Diesel	1		1	8	
Transfer Conductor (9)				**16**	**3**		**.5 Circuit Miles**
3/4-Ton Pick-up Truck, 4x4	300	Diesel	2		3	8	
1-Ton Crew Cab Flat Bed, 4x4	300	Diesel	2		3	8	
Wire Truck/Trailer	350	Diesel	2		3	2	
Dump Truck (Trash)	350	Diesel	1		5	2	
20,000 lb. Rough Terrain Fork Lift	350	Diesel	1		3	2	
22-Ton Manitex	350	Diesel	1		3	8	
30-Ton Manitex	350	Diesel	2		3	6	
Splicing Rig	350	Diesel	1		3	2	
Splicing Lab	300	Diesel	1		3	2	1 tower/day
Spacing Cart	10	Diesel	1		3	8	
Static Truck/ Tensioner	350	Diesel	1		3	2	
3 Drum Straw line Puller	300	Diesel	1		3	4	
60lk Puller	525	Diesel	1		3	3	
Sag Cat w/ 2 winches	350	Diesel	1		3	2	
580 Case Backhoe	120	Diesel	1		3	2	
D8 Cat	300	Diesel	1		3	3	
Lowboy Truck/Trailer	500	Diesel	1		3	2	
Restoration (11)				**7**	**3**		**.5 Miles**
1-Ton Crew Cab, 4x4	300	Diesel	2		3	2	0.5 Mile/Day
Road Grader	350	Diesel	1		1	6	
Backhoe/Front Loader	350	Diesel	1		1	6	

TABLE 6

CONSTRUCTION EQUIPMENT AND WORKFORCE ESTIMATES BY ACTIVITY TRANSMISSION LINE STRUCTURE REMOVAL

Work Activity				Activity Production			
Primary Equipment Description	Estimated Horse-Power	Probable Fuel Type	Primary Equipment Quantity	Estimated Workforce	Estimated Schedule (Days)	Duration of Use (Hrs/Day)	Estimated Production Per Day
Drum Type Compactor	250	Diesel	1		1	6	
Track Type Dozer	350	Diesel	1		3	6	
Lowboy Truck/Trailer	300	Diesel	1		2	3	

5.0 Distribution System for Station Light and Power

The following elements describe the distribution requirements for one of the two required sources of Lockhart Substation station light and power.

5.1 Distribution System Design and Equipment

The Hutt 12 kV distribution circuit out of Hutt Poletop Substation is assumed to remain in place and; therefore, it would be the source to provide station light and power to the Lockhart Substation. The Lockhart Project calls for rearranging the existing Hutt 12 kV overhead distribution circuit where it terminates at the central site for the proposed Lockhart Substation at approximately the location of an existing distribution pole located near Roy Street and a private dirt road. This distribution pole would need to be removed as well as the pole to the north in order to make room for the new Lockhart Substation.

A new distribution riser pole would be installed from an existing pole on the west side of the proposed Lockhart Substation. (see Figure 5). An Omni-rupter switch would be installed on the distribution 12 kV riser pole along with the distribution riser. Approximately 200-400 feet of two five inch conduits would be installed to a new 12 kV station light and power rack location within Lockhart Substation adjacent to the MEER. Portions of these facilities could also be utilized for installation of the required telecommunication fiber optic cables into Lockhart Substation (described below in Section 6.0, Telecommunication System).

The 12 kV Hutt distribution circuit would extend through one of the new five inch conduits with 1/0 aluminum jacketed concentric neutral (JCN), cross-linked polyethylene (CLP) cable to connect the existing overhead tap line to the back-up station light and power transformers mounted on the 12 kV rack within the substation.

SCE's construction requirements for temporary power would be a 200 amp, 120/240 volt, 3-phase, 4-wire panel. An open delta transformer bank would be installed on an existing 12 kV distribution pole to the west of the proposed Lockhart Substation.

TABLE 7
LOCKHART SUBSTATION

CONSTRUCTION EQUIPMENT AND WORKFORCE ESTIMATES BY ACTIVITY
12KV HUTT STATION LIGHT & POWER

Work Activity				**Estimated Workforce**	**Estimated Schedule (Days)**		**Activity Production**
Primary Equipment Description	Estimated Horse-Power	Probable Fuel Type	Primary Equipment Quantity			Duration of Use (Hrs/Day)	Estimated Production Per Day
Trenching, Structure Excavation(1)				**4**	**1**		
1-Ton Crew Cab	300	Diesel	1		1	2	
Backhoe Front Loader	300	Diesel	1		1	8	
Dump Truck	300	Diesel	1		1	4	
Overhead Line Work(2)				**4**	**2**		
1-Ton Crew Cab, 4x4	300	Diesel	1		2	2	
55' Double Bucket Truck	350	Diesel	1		2	8	
Underground Cable Pulling and Makeup (3)				**4**	**1**		
55' Double Bucket Truck	350	Diesel	1		1	8	
1-Ton Crew Cab, 4x4	300	Diesel	1		1	2	
Hydraulic Rewind Puller	300	Diesel	1		1	6	

Crew size assumptions:

1. Trenching and Conduit Installation = one 4-man crew
2. Overhead Line Work = one 4-man crew
3. Underground Cable Pulling and Makeup = one 4-man crew

5.2 Distribution System Construction

A lay down area within the SCE-owned Lockhart Substation property or within AMSP property as needed would be required to store any materials needed during construction. One line truck and a companion vehicle with a four man crew would be utilized to perform the work each day. SCE anticipates

working typical construction schedules, however the actual construction hours may vary. Land disturbance for distribution construction activities would be within the AMSP property and included in AMSP's disturbance area.

6.0 Telecommunication System

The following elements describe the requirements for Lockhart Substation telecommunication facilities.

6.1 Telecommunication System Design and Equipment

A telecommunication system would be required in order to provide transmission line protection, SPS, monitoring, and remote operation capabilities of the electrical equipment at Lockhart Substation.

To provide line protection, the telecommunications system would extend diverse communication paths utilizing fiber-optic cables to connect Lockhart Substation to the SCE telecommunication network via SCE's Kramer Substation, SCE's Tortilla Substation, and also to the AMSP Alpha and Beta power facilities. In addition, a telecommunication path between SCE's Tortilla Substation and SCE's Cool Water Substation is currently undergoing permitting as part of a separate project and would also be used for the required line protection (see Figure 3-1, Figure 3-2, Figure 3-3 and Figure 3-4). In addition, a new telecommunication facility would be required at SCE's Tortilla Substation (see Figure 3-6). This telecommunications facility is needed to support the additional telecommunication equipment to be installed at Tortilla Substation.

To provide for the required SPS, SCE telecommunications would install a fiber optic cable between SCE's existing Kramer Substation and SCE's existing Victor Substation. SCE has evaluated the possibility of installing a telecommunication ADSS fiber optic cable on the existing Kramer-Victor 115 kV pole line. The completion of the initial evaluation identified that the SCE's Kramer-Victor 115 kV pole line is adequate to support the ADSS fiber optic cable. However, approximately 30 new wood or lightweight steel interset poles would have to be installed in specific areas within existing ROW to support ground clearance requirements. The number and exact location, as well as type of interset poles would be determined during final engineering (see Figure 3-5).

It is anticipated that the total distance of the combined telecommunication routes would be approximately 85 miles.

As described in detail below, certain portions of the fiber optic cable would be constructed on existing overhead distribution and transmission wood and light duty steel poles, while other portions of the cable would be constructed on new overhead structures and newly constructed underground conduit system(s). For a breakdown of new versus existing components refer to the Table 8 below.

Telecommunications Equipment:

- New overhead/underground 48-strand fiber optic cables to connect the Lockhart Substation site/property to SCE's Kramer and Tortilla Substations, and AMSP's Alpha and Beta Substations.
- New overhead/underground 96-strand fiber optic cables to connect SCE's Kramer Substation to SCE's Victor Substation.
- New fiber optic multiplex equipment and channel equipment in the Lockhart Substation MEER.
- New telecommunications room within SCE's existing Tortilla Substation.
- New fiber optic multiplex equipment and channel equipment at SCE's Kramer, Tortilla, Coolwater, Roadway, Lugo Substations and any other location necessary to support the communication requirements for the Lockhart Project.
- Replacement of existing poles if required, to be determined during final engineering.

Cable Route, SCE's Kramer Substation to Lockhart Substation:

From SCE's Kramer Substation, proceed north from the MEER building approximately 800' feet installing underground cable in an existing underground trench. Continue west approximately 525 feet installing underground cable in existing underground conduit. Continue north approximately 725 feet installing underground cable in existing underground conduit to pole 1793491E rise up.

Continue north approximately 2,000 feet installing ADSS overhead cable on existing overhead structures, continue east on ROW approximately 63,500 feet installing overhead cable on existing overhead structures. Continue north on Harper Lake Road approximately 5,700 feet installing overhead cable on existing overhead structures, continue east on Lockhart Road approximately 11,000 feet installing overhead cable on existing overhead structures to pole 4488408E where path would continue south approximately 5,700 feet installing overhead cable on new overhead structures to be installed for station light and power for Lockhart Substation. Install riser and continue for approximately 1,000 feet installing underground cable in new underground conduit structures to Lockhart Substation MEER.

Cable Route, SCE's Lockhart Substation to SCE's Tortilla Substation:

From Lockhart Substation, proceed south from the MEER for approximately 1,000 feet installing underground cable in new underground conduit to a new pole with riser. From this point continue west on existing overhead H-frame subtransmission structures within SCE's existing Coolwater-Kramer 115 kV ROW for approximately 11,000 feet (see Figure 7).. A riser would be installed on the last pole near the intersection with Harper Lake Road. Continue south on Harper Lake Road for approximately 400 feet installing new underground cable and conduit to pole 4349976E where a new riser would be installed. Continue south on Harper Lake Road to HWY 58 for approximately 26,000 feet installing ADSS overhead cable on existing overhead structures.

From HWY 58 continue east for approximately 52,600 feet installing overhead cable on existing overhead structures. Continue south on Summerset Road for approximately 5,300 feet installing overhead cable on existing overhead structures. Continue east on Community Boulevard for approximately 10,600 feet installing overhead cable on existing overhead structures to Lenwood Road. Continue south for approximately 13,500 feet installing overhead cable on existing overhead structures. Continue south on Sun Valley Drive for approximately 2,000 feet installing overhead cable on existing overhead structures. Continue northeast on the existing SCE Poco 33 kV pole line for approximately 25,000 to Avenue I installing overhead cable on existing overhead structures. Continue south approximately 1,850 feet installing overhead cable on existing overhead structures. Continue south crossing over Interstate 15 for approximately 425 feet to pole 1847916E on I Street and continue south approximately 4,500 feet to Siderite Road installing overhead cable on the existing overhead structures.

From Siderite Road continue east for approximately 1,400 feet installing overhead cable on existing overhead structures. Continue northwest on SCE's existing Kramer-Tortilla 115 kV ROW for approximately 6,100 feet installing overhead cable on existing overhead structures to pole 2263364E drop down existing riser, continue east for approximately 500 feet installing underground cable in existing underground conduit to SCE's Tortilla Substation MEER.

Cable Route, SCE's Lockhart Substation to AMSP's Alpha and Beta Power Facilities:

Routing of second diverse path routed fiber-optic cable from Lockhart Substation to AMSP's Alpha and Beta power facilities would be dependent on easements and paths provided by Abengoa.

Cable Route, SCE's Victor Substation to Kramer Substation:

The Victor Substation to Kramer Substation fiber optic cable would consist of a proposed fiber optic communications path between SCE's existing Victor Substation and Kramer Substation (see Table 10 and 11). The Victor Substation to Kramer Substation fiber optic cable would proceed approximately 225' northwest from the Victor MEER in a new underground conduit to a new riser to be installed on 115 kV pole 4409452E. From this new line riser, approximately 14,750 feet of new overhead fiber optic cable would be installed on the existing Kramer-Victor 115 kV overhead structures, which generally parallel Hwy 395 towards the Kramer Substation. A new riser drop down, approximately 500' of new underground conduit, a new line riser would be required to cross under 287 kV transmission lines owned by the Los Angeles Department of Water and Power (LADWP). From this point, the new fiber optic cable would be installed on the existing Kramer-Victor 115 kV overhead structures for approximately 4,300 feet. A new riser drop down, approximately 500' of new underground conduit, a new line riser would be required to cross under SCE's Kramer-Lugo 220 kV transmission lines. From this point, the new fiber optic cable would again be installed on the existing Kramer-Victor 115 kV overhead structures for approximately 6,400 feet where it would then be routed in and out of SCE's Roadway 115 kV Substation. To route into SCE's Roadway 115 kV Substation MEER, a new riser drop down and approximately 350 feet of new underground conduit would be required. To route out of SCE's Roadway 115 kV Substation MEER, approximately 575 feet of new cable would be installed on existing underground conduit, approximately 600 feet of new cable would

be installed on new underground conduit, and a new line riser would be required. From this point, approximately 570 feet of new overhead cable would be installed back to the Kramer-Victor 115 kV line where it would then head north for approximately 155,000 feet towards the Kramer Substation. A new riser drop down would be required on the last Kramer-Victor 115 kV pole just outside the Kramer Substation and approximately 1,000 feet of new underground conduit towards the Kramer Substation MEER would complete the fiber optic communications path between SCE's existing Victor Substation and Kramer Substation. Approximately 30 new wood or lightweight steel interset poles would have to be installed in specific areas within existing ROW to support ground clearance requirements as stated earlier in this document. The number and exact location, as well as type of interset poles would be determined during final engineering.

Cable Route, SCE's Tortilla Substation to Coolwater Substation:

The Tortilla-Coolwater fiber optic cable is needed to complete the path for the required line protection. However, it is currently undergoing permitting as part of a separate project and is included here as a reference. However, if the other project is cancelled or delayed, this fiber optic cable is still required for the Lockhart Project.

Proposed cable route: From the Coolwater GS Communication Room proceed east approximately 196 feet and south approximately 789 feet installing underground cable in existing underground conduit to the existing riser pole 2311957E, go up existing riser and continue west approximately 910 feet installing overhead cable on existing overhead structures to pole 2311962E, continue south approximately 255 feet installing overhead cable on existing overhead structures to riser pole 2311963E, and continue south approximately 1,026 feet installing underground cable in underground conduit to riser pole 1847660E, go up riser and continue west approximately 3,071 feet installing overhead cable on existing overhead structures to pole 2311982E, continue south approximately 500 feet installing overhead cable on existing overhead structures to pole 83120S, continue west approximately 16,675 feet installing overhead cable on existing overhead structures to pole 430515S, continue south approximately 420 feet installing overhead cable on existing overhead structures to pole 430514S, continue west approximately 17,903 feet installing overhead cable on existing overhead structures to pole 1771073E, continue south approximately 200 feet installing overhead cable on existing overhead structures to pole 1771075E, continue west approximately 14,931 feet installing overhead cable on existing overhead structures to pole 1730385E, continue north approximately 300 feet installing overhead cable on existing overhead structures to pole 1730387E, continue west approximately 268 feet installing overhead cable on existing overhead structures to pole 4699300E, continue south approximately 75 feet installing overhead cable on existing overhead structures to "no tag" pole, continue west approximately 322 feet installing overhead cable on existing overhead structures to new riser pole 4645190E, install riser on pole drop down riser and continue north and east approximately 395 feet installing underground cable in new underground conduit to existing substation cable trench, continue north approximately 45 installing underground cable in existing substation cable trench into the MEER in Tortilla Substation.

Table 8 – Summary of Proposed Telecommunications Fiber Optic Cables Estimates

	Kramer to Lockhart	Lockhart to Tortilla	Victor to Kramer	Tortilla to Coolwater*
Fiber-Optic Cable Length (Proposed)	92,000 ft (18 miles)	164,000 ft (31 miles)	185,000 ft (35 miles)	57,900 ft (11 miles)
Total Length Underground (U.G.)	3,100 ft	1,900 ft.	2,300 ft	2460 ft
-Existing U.G. Conduits	2,000 ft.	500 ft.	700 ft	2460 ft
-New U.G. Conduits Needed	1,100 ft.	1,400 ft.	1600 ft	0
Total Length Overhead (O.H.)	88,000 ft.	162,000 ft.	182,700 ft	55,440 ft
-Existing O.H.	82,000 ft.	150,000 ft	182,700 ft	55,440 ft
-New O.H.	6,000 ft.	12,000 ft	0 ft	0
-Existing Poles	250	600	226	220
-New Poles Required	30	55	30	0
Estimated Ground Disturbance	7,500 sq ft	13,700 sq ft.	226,500 sq ft	3,400 sq ft.
Time and Resources to Construct (4 men per crew)	38 Crew Days	64 Crew Days	154 Crew Days	19 Crew Days
Total Man Days Required	152 Man Days	256 Man Days	755 Man Days	97 Man Days

Note: These figures are desktop estimates and may change based upon final engineering.

* Tortilla to Coolwater fiber-optic cable is in the permitting phase in a separate project and is included in this table only should it be required to be constructed as part of the Lockhart Project.

6.2 Telecommunication System Construction

Construction Activities

SCE would utilize SCE's existing Victor, Roadway, Kramer, Tortilla, and Coolwater Substations as well as SCE's Barstow Service Center and the proposed Lockhart Substation as marshalling yards to support the installation of the telecommunications facilities required for this project. SCE or contractor crews would use standard construction methods to construct the required fiber optic cables. The crews would comply with all rules, regulations and standards with interdepartments and other agencies while in their performance of the construction phase.

Portions of the fiber optic cable would be constructed on existing overhead distribution and transmission wood and light duty steel poles. In addition, portions of the cable would be constructed on new overhead structures and newly constructed underground conduit system(s), subject to determination through final engineering. This project description is based on planning level assumptions. Exact details would be determined following completion of preliminary and final engineering, identification of field conditions, availability of labor, material, and equipment, and compliance with applicable environmental and permitting requirements.

Generally no hazardous materials would be used in installing underground conduit, new wood communication poles, and the stringing of fiber-optic cables. There is generally no need for local services or utilities (such as water). Waste generated (empty cable reels, cut-off pieces of fiber cable) would be disposed of at existing SCE facilities.

Table 9 - Telecommunications Labor Force and Construction Equipment Estimates

Construction Element	Number of Personnel	Equipment Requirements
Cable Construction	4	2 – Bucket Trucks (Diesel) 1 – Pick-up (Diesel) 2 – Cable Dollies 1 – Single Drum Puller (Diesel) 1 – 2 Axle Trailer
Receive and Load Out Materials	4	1 – 5-Ton Forklift (Diesel) 1 – Pick-up (Diesel)
Cleanup	4	2 – Bucket Trucks (Diesel) 1 – Pick-up (Diesel)

TABLE 10
CONSTRUCTION EQUIPMENT AND WORKFORCE ESTIMATES BY ACTIVITY
CONSTRUCT KRAMER-VICTOR FIBER OPTIC CABLE

Work Activity				Activity Production			
Primary Equipment Description	Estimated Horse-Power	Probable Fuel Type	Primary Equipment Quantity	Estimated Workforce	Estimated Schedule (Days)	Duration of Use (Hrs/Day)	Estimated Production Per Day
Survey (1)				**4**	**4**		**34 Miles/Interset Poles**
½-Ton Pick-up Truck, 4x4	200	Gas	2		4	8	12 Mile/Day
Marshalling Yard (2)				**4**			
1-Ton Crew Cab, 4x4	300	Diesel	1			2	
30-Ton Crane Truck	300	Diesel	1			2	
10,000 lb Rough Terrain Fork Lift	200	Diesel	1		Duration of Project	5	
4000 gallon Water Truck	350	Diesel	1			8	
Truck, Semi, Tractor	350	Diesel	1			1	
Roads (3)				**5**	**17**		**34 Miles**
1-Ton Crew Cab, 4x4	300	Diesel	2		17	2	2 Miles/Day
Road Grader	350	Diesel	1		17	4	
Backhoe/Front Loader	350	Diesel	1		17	6	

TABLE 10
CONSTRUCTION EQUIPMENT AND WORKFORCE ESTIMATES BY ACTIVITY
CONSTRUCT KRAMER-VICTOR FIBER OPTIC CABLE

Work Activity				Activity Production			
Primary Equipment Description	Estimated Horse-Power	Probable Fuel Type	Primary Equipment Quantity	Estimated Workforce	Estimated Schedule (Days)	Duration of Use (Hrs/Day)	Estimated Production Per Day
Drum Type Compactor	250	Diesel	1		17	4	
Track Type Dozer	350	Diesel	1		17	6	
Excavator	300	Diesel	1		9	6	
Lowboy Truck/Trailer	500	Diesel	1		9	2	
Install 5 foot Crossarm (4)				**8**	**23**		**34 Miles Approx 900 Poles**
1-Ton Crew Cab Flat Bed, 4x4	300	Diesel	3		23	2	40 Crossarms /Day
Bucket Truck	300	Diesel	2		23	5	
Install LWS Poles (5)				**10**	**8**		**Interset 30 LWS Poles**
1-Ton Crew Cab Flat Bed, 4x4	300	Diesel	3		8	2	4 Poles /Day
Auger Truck	500	Diesel	1		8	8	
Backhoe/Front Loader	200	Diesel	1		18	8	
Steel Pole Haul (6)				**8**	**3**		**30 LWS Poles**
¾-Ton Pick-up Truck, 4x4	300	Diesel	2		3	5	12 steel Poles/Day
30-Ton Crane Truck	300	Diesel	1			4	
40' Flat Bed Truck/ Trailer	350	Diesel	2		3	8	
Install Fiber Optic Cable (7)				**8**	**11**		**34 Circuit Miles**
¾-Ton Pick-up Truck, 4x4	300	Diesel	2		11	8	
1-Ton Crew Cab Flat Bed, 4x4	300	Diesel	4		11	8	3 miles/day
Bucket Truck	350	Diesel	2		11	8	1800 foot reel
Splicing Lab	300	Diesel	1		3	2	
3 Drum Straw line Puller/Tensioner	300	Diesel	1		6	6	
Restoration (8)				**7**	**34**		**34 Miles**
1-Ton Crew Cab, 4x4	300	Diesel	2		34	2	1 Mile/Day
Road Grader	350	Diesel	1		34	6	
Water Truck	350	Diesel	1		34	8	

TABLE 10
CONSTRUCTION EQUIPMENT AND WORKFORCE ESTIMATES BY ACTIVITY
CONSTRUCT KRAMER-VICTOR FIBER OPTIC CABLE

Work Activity				Activity Production			
Primary Equipment Description	Estimated Horse-Power	Probable Fuel Type	Primary Equipment Quantity	Estimated Workforce	Estimated Schedule (Days)	Duration of Use (Hrs/Day)	Estimated Production Per Day
Backhoe/Front Loader	350	Diesel	1		34	6	
Drum Type Compactor	250	Diesel	1		34	6	
Track Type Dozer	350	Diesel	1		34	6	
Lowboy Truck/Trailer	300	Diesel	1		34	3	

Crew Size Assumptions:

#1 Survey = one 4-man crew
#2 Marshalling Yards = one 4-man crew
#3 Road Work = one 5-man crew
#4 Install 5 foot Crossarm = two 4-man crew
#5 Install LWS Poles = one 10-man crew
#6 Steel Pole Haul = one 8-man crew
#7 Install Fiber Optic Cable = two 4-man crews
#8 Restoration = one 7-man crew

Table 11 - Ground Disturbance Kramer-Victor Fiber-Optic Cable

Project Feature	Site Quantity	Disturbed Acreage Calculation (L x W)	Acres Disturbed During Construction	Acres to be Restored	Acres Permanently Disturbed
Construct New Light Weight Steel Pole (1)	30	75' x 75'	3.9	2.4	1.5
Fiber Optic Setup Area - Tensioner (2)	18	40' x 60'	1.0	1.0	0.0
Fiber Optic Splicing Setup Areas (2)	18	20' x 30'	0.2	0.2	0.0
New Access Roads (3)	0.1	linear miles x 14' wide	0.1	0.0	0.1
Total Estimated (5)			**5.2**	**3.6**	**1.6**

Notes:
2. Includes structure assembly & erection, conductor & ADSS installation. Area to be restored after construction. Portion of R/W within 25' of the Tubular Steel Pole and within 10' of Light Weight Steel Pole, and H-Frame to remain cleared of vegetation. Permanently disturbed areas for TSP=0.06 acre, LWS=0.05 acre, and H-Frame=0.06acre.
3. Based on 9,000' conductor reel lengths, number of circuits, and route design.

4. Based on approximate length of road in miles x road width of 14'.
5. The disturbed acreage calculations are estimates based upon SCE's preferred area of use for the described project feature, the width of the existing right-of-way, or the width of the proposed right-of-way and, they do not include any new access/spur road information; they are subject to revision based upon final engineering and review of the project by SCE's Construction Manager and/or Contractor awarded project.

Footing / Base Volume and Area Calculations:
Average TSP depth 30ft deep, 7ft diameter, qty 1 per TSP: earth removed for footing = 42.8 cu. yds.; surface area = 38.5 sq.ft.
Average LWS depth 12ft deep, 2.5ft diameter, qty 1 per LWS: earth removed for pole base = 2.2 cu. yds.; surface area = 4.9 sq. ft.
Average Wood H-Frame depth 12ft deep, 2.5ft diameter, qty 2 per H-Frame: earth removed for pole base = 4.4 cu. yds.; surface area = 9.8 sq. ft.

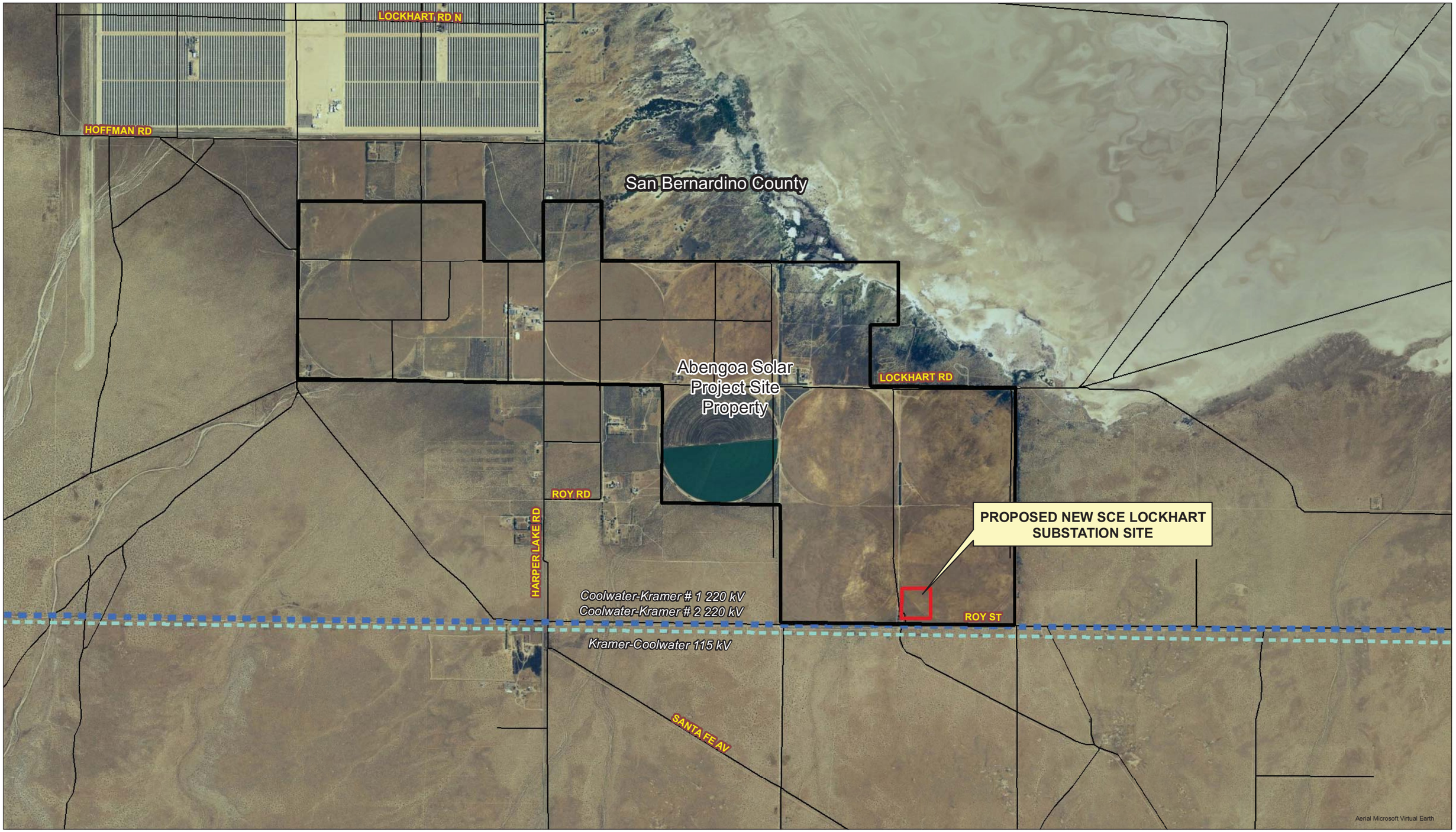

SOUTHERN CALIFORNIA EDISON
An EDISON INTERNATIONAL™ Company

FIGURE 1
PROPOSED NEW SCE LOCKHART SUBSTATION SITE

Features depicted herein are planning level accuracy, and intended for informational purposes only. Distances and locations may be distorted at this scale. Always consult with the proper legal documents or agencies regarding such features.
© Real Properties - Survey and Mapping.

Thomas Bros. Maps is a registered trademark of Rand McNally & Company. Reproduced with permission granted by Rand McNally & Company.
© Rand McNally & Company. All rights reserved.

Legend

- Proposed New SCE Lockhart Substation Site
- Mohave Solar (Abengoa Solar Inc.) Plant Site
- Existing 220kV Transmission Lines (SCE, 2009)
- Existing 115kV Subtransmission Line (SCE, 2009)
- Minor Roads (TBM, 2008)

N W E S

0 0.25 0.5 1 Miles

P:\GISData\Projects\MasterData\Major Transmission Projects\LockhartProject\2010\NOT\20081962S_Interconnection_Maps\MXD_April022010_Rev2\Figure 1 - Preferred Substation Site-PropertyRev2.mxd 4/07/2010

SUBSTATION DETAILS

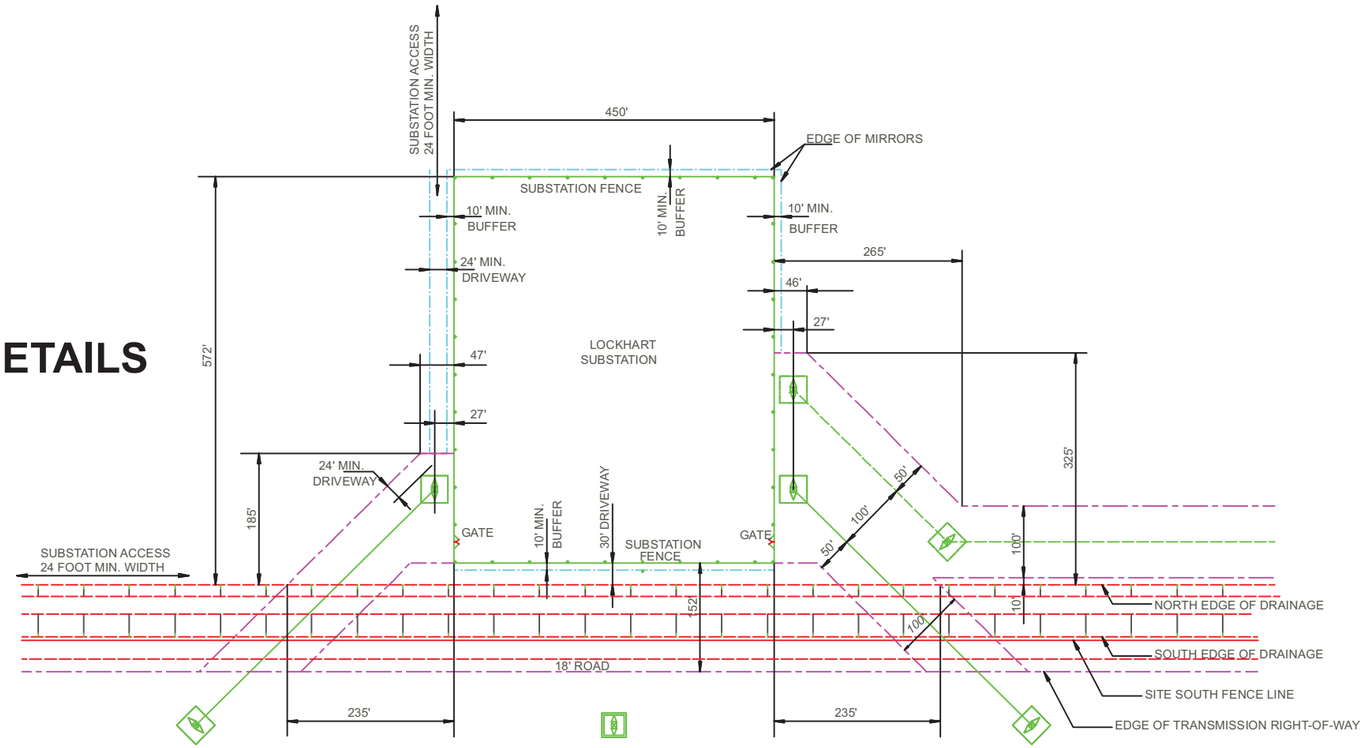

LEGEND

- SCE SUBSTATION FENCE
- TEN-FOOT OPEN SPACE BUFFER OUTSIDE THE SUBSTATION FENCE
- SCE TRANSMISSION RIGHT-OF-WAY
- DRAINAGE CHANNEL TOP OF SLOPE
  DRAINAGE CHANNEL BOTTOM OF SLOPE
- SOLAR FARM FENCE
- FUTURE GEN-TIE LINE
- EXISTING SCE 220KV TRANSMISSION TOWERS
- PROPOSED SCE 220KV TRANSMISSION TOWERS
- FUTURE GENERATION TIE LINE TOWERS

Note: CONCEPTUAL ENGINEERING, DO NOT SPOT

SITE PLAN

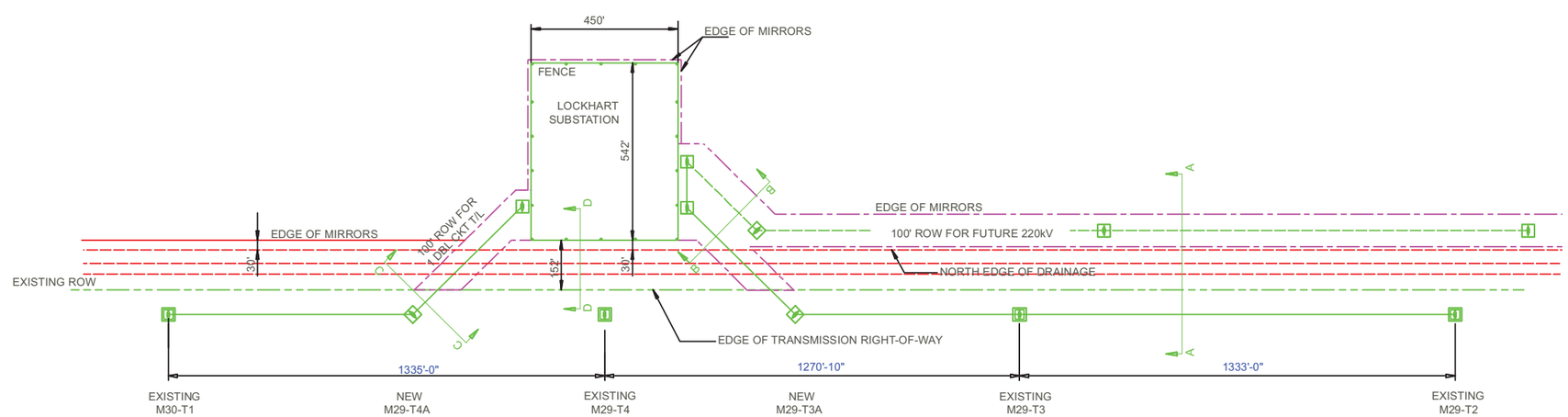

SOUTHERN CALIFORNIA EDISON
An EDISON INTERNATIONAL™ Company

FIGURE 2
PROPOSED NEW SCE LOCKHART SUBSTATION AND ASSOCIATED ELECTRICAL LINES

Features depicted herein are planning level accuracy, and intended for informational purposes only. Distances and locations may be distorted at this scale. Always consult with the proper legal documents or agencies regarding such features.
© Real Properties - Survey and Mapping.

N W E S

P:\GISData\Projects\MasterData\Major Transmission Projects\LockhartProject\2010\NOT200819625_Interconnection_Maps\MXD_April022010_Rev2\Figure 2 - LockHart Central Substation and Associated Electrical Lines.mxd 4/07/2010

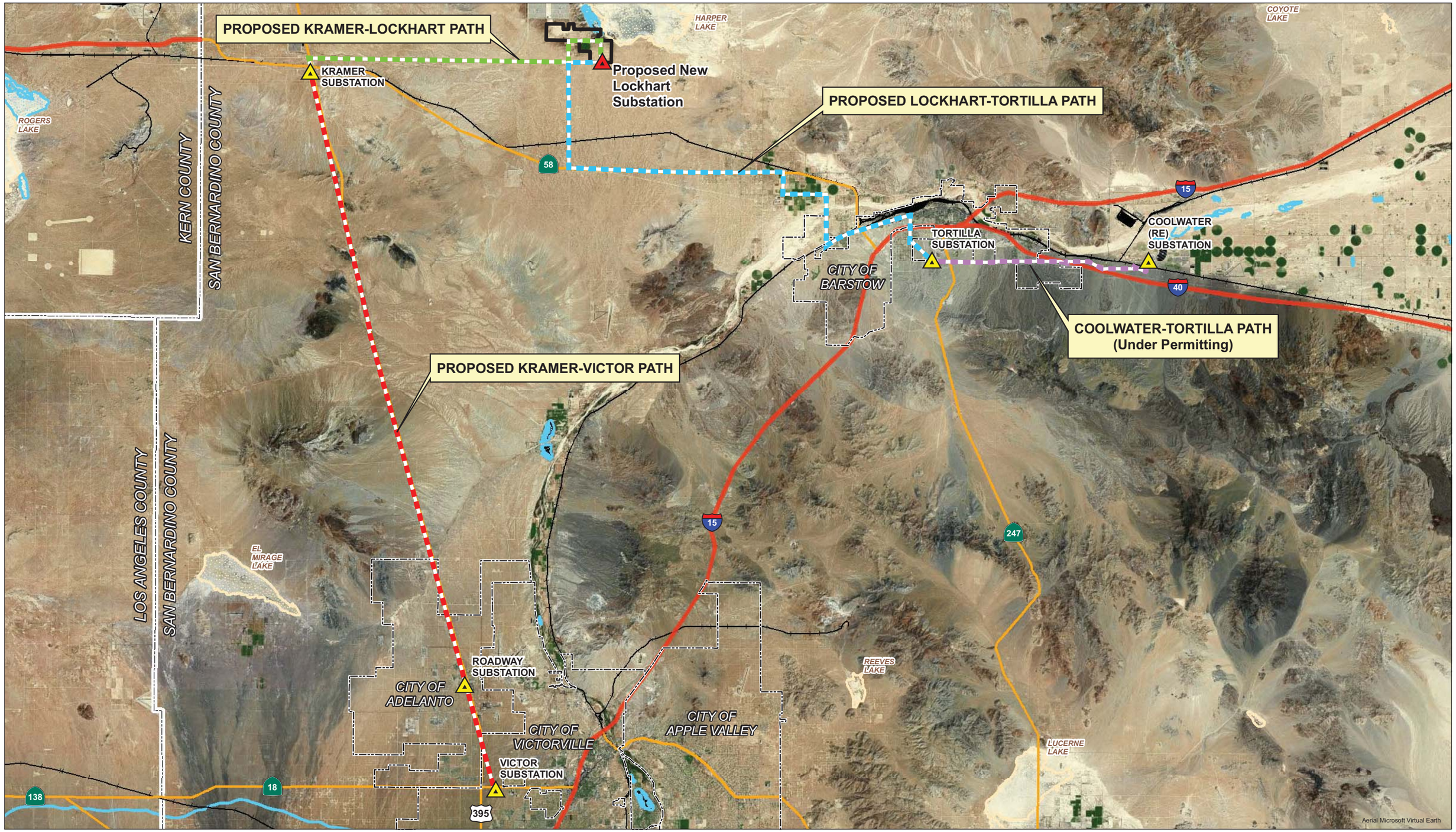

SOUTHERN CALIFORNIA EDISON
An EDISON INTERNATIONAL Company

FIGURE 3-1
OVERVIEW OF PROPOSED NEW TELECOMMUNICATION FIBER OPTIC CABLES FOR THE LOCKHART PROJECT

Features depicted herein are planning level accuracy, and intended for informational purposes only. Distances and locations may be distorted at this scale. Always consult with the proper legal documents or agencies regarding such features.
© Real Properties - Survey and Mapping.

Thomas Bros. Maps is a registered trademark of Rand McNally & Company. Reproduced with permission granted by Rand McNally & Company.
© Rand McNally & Company. All rights reserved.

Legend

Proposed Telecommunication Path
- Kramer-Lockhart Path
- Kramer-Victor Path
- Lockhart-Tortilla Path
- Coolwater-Tortilla Path

- Proposed New Lockhart Substation
- Existing Substation (SCE, 2010)
- Mohave Solar (Abengoa Solar Inc.) Plant Site

- Freeways (TBM, 2008)
- Highways (TBM, 2008)
- Railroads (TBM, 2008)

- County Boundary (TBM, 2008)
- City Boundary (TBM, 2008)

Hydrology Areas (TBM, 2008)
- Perennial
- Dry

N W E S

0 1.25 2.5 5 Miles

P:\GISData\Projects\Master\Data\Major Transmission Projects\LockhartProject\2010\NOT2008\9625_Interconnection_Maps\Figure 3-1 Proposed Telecomm Rev2.mxd DATE: 4/02/2010

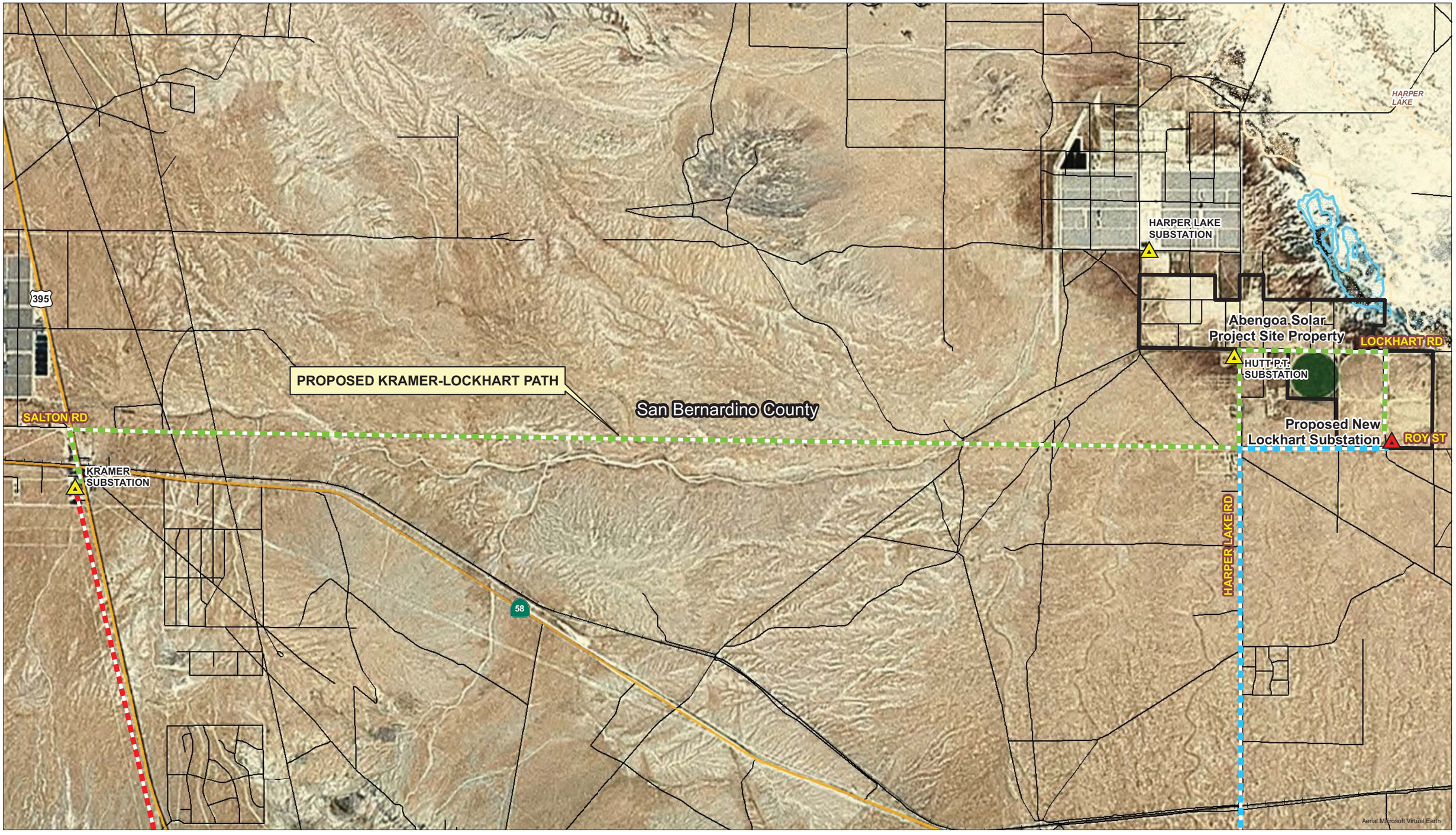

SOUTHERN CALIFORNIA EDISON
An EDISON INTERNATIONAL℠ Company

FIGURE 3-2
PROPOSED NEW TELECOMMUNICATION FIBER OPTIC CABLE CONNECTING KRAMER SUBSTATION TO NEW LOCKHART SUBSTATION

Features depicted herein are planning level accuracy, and intended for informational purposes only. Distances and locations may be distorted at this scale. Always consult with the proper legal documents or agencies regarding such features.
© Real Properties - Survey and Mapping.

Thomas Bros. Maps is a registered trademark of Rand McNally & Company. Reproduced with permission granted by Rand McNally & Company.
© Rand McNally & Company. All rights reserved.

Legend

Proposed Telecommunication Path
- Kramer-Lockhart Path
- Kramer-Victor Path
- Lockhart-Tortilla Path

- Proposed Lockhart Substation
- Existing Substation (SCE, 2010)
- Mohave Solar (Abengoa Solar Inc.) Plant Site

- Freeways (TBM, 2008)
- Highways (TBM, 2008)
- Minor Roads (TBM, 2008)
- Railroads (TBM, 2008)

- City Boundary (TBM, 2008)

Hydrology Areas (TBM, 2008)
- Perennial
- Dry

N W E S

0 0.25 0.5 1 Miles

P:\GISData\Projects\MasterData\Major Transmission Projects\LockhartProject2010\NOT200819625_Interconnection_Maps\Figure 3-2 Proposed Telecomm Kramer to Lockhart Rev2.mxd DATE: 4/02/2010

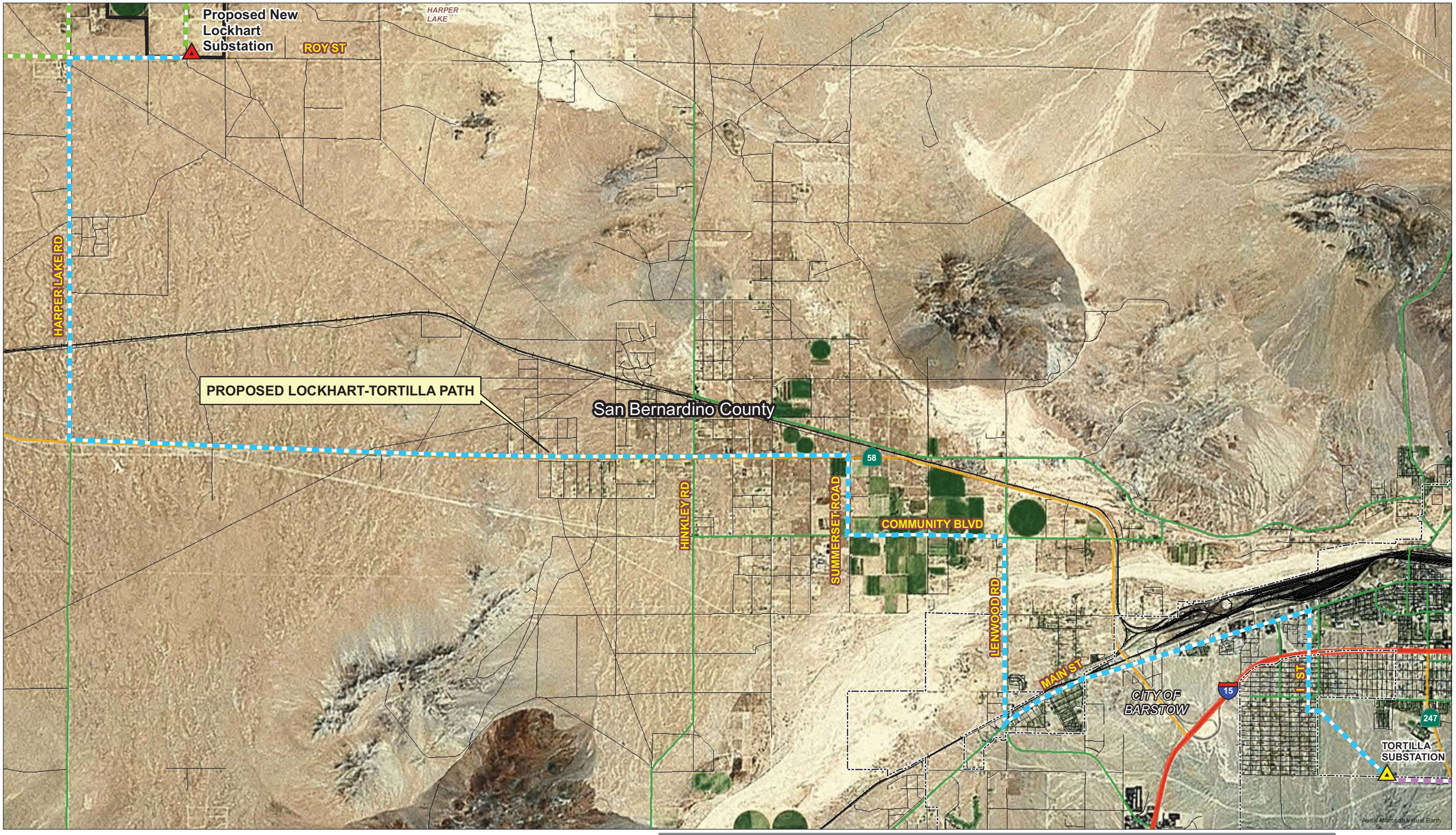

SOUTHERN CALIFORNIA EDISON
An EDISON INTERNATIONAL℠ Company

FIGURE 3-3
PROPOSED NEW TELECOMMUNICATION FIBER OPTIC CABLE CONNECTING NEW LOCKHART SUBSTATION TO TORTILLA SUBSTATION

Features depicted herein are planning level accuracy, and intended for informational purposes only. Distances and locations may be distorted at this scale. Always consult with the proper legal documents or agencies regarding such features.
© Real Properties - Survey and Mapping.

Thomas Bros. Maps is a registered trademark of Rand McNally & Company. Reproduced with permission granted by Rand McNally & Company.
© Rand McNally & Company. All rights reserved.

Legend

Proposed Telecommunication Path
- Lockhart-Tortilla Path
- Kramer-Lockhart Path
- Coolwater-Tortilla Path (Under Permitting)

- Proposed Lockhart Substation
- Existing Substation (SCE, 2010)

- Freeways (TBM, 2008)
- Highways (TBM, 2008)
- Major Roads (TBM, 2008)
- Minor Roads (TBM, 2008)
- Railroads (TBM, 2008)

- City Boundary (TBM, 2008)

Hydrology Areas (TBM, 2008)
- Perennial
- Dry

N W E S

0 0.25 0.5 1 Miles

P:\GIS\Data\Projects\MasterData\Major Transmission Projects\LockhartProject\2010\NOT200819625_Interconnection_Maps\Figure 3-3 Proposed Telecomm Lockhart to Tortilla Rev2.mxd DATE: 4/02/2010

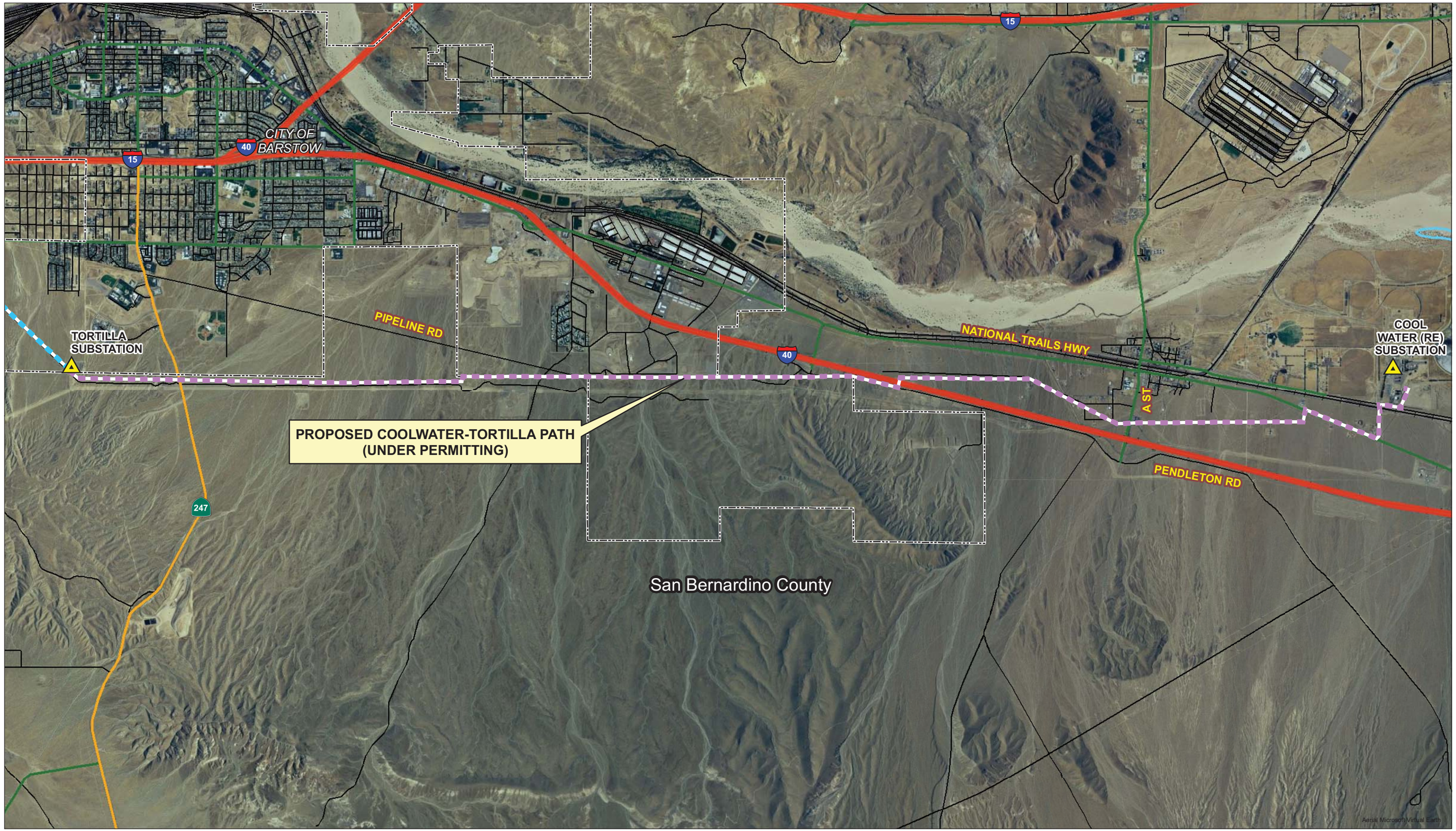

SOUTHERN CALIFORNIA EDISON
An EDISON INTERNATIONAL™ Company

FIGURE 3-4
PROPOSED NEW TELECOMMUNICATION FIBER OPTIC CABLE CONNECTING TORTILLA SUBSTATION TO COOLWATER SUBSTATION (NOT BUILT - IN PERMITTING PHASE)

Features depicted herein are planning level accuracy, and intended for informational purposes only. Distances and locations may be distorted at this scale. Always consult with the proper legal documents or agencies regarding such features.
© Real Properties - Survey and Mapping.

Thomas Bros. Maps is a registered trademark of Rand McNally & Company. Reproduced with permission granted by Rand McNally & Company.
© Rand McNally & Company. All rights reserved.

Legend

Proposed Telecommunication Path
- Coolwater-Tortilla Path (Under Permitting)
- Lockhart-Tortilla Path

Existing Substation (SCE, 2010)

- Freeways (TBM, 2008)
- Highways (TBM, 2008)
- Major Roads (TBM, 2008)
- Minor Roads (TBM, 2008)
- Railroads (TBM, 2008)
- City Boundary (TBM, 2008)

Hydrology Areas (TBM, 2008)
- Perennial
- Dry

N W E S

0 0.25 0.5 1 Miles

P:\GISData\Projects\MasterData\Major Transmission Projects\LockhartProject\2010\NOT200819625_Interconnection_Maps\MXD_April022010_Rev2\Figure 3-4 Proposed Telecomm TORTILLA TO COOLWATER Rev2.mxd DATE: 4/02/2010

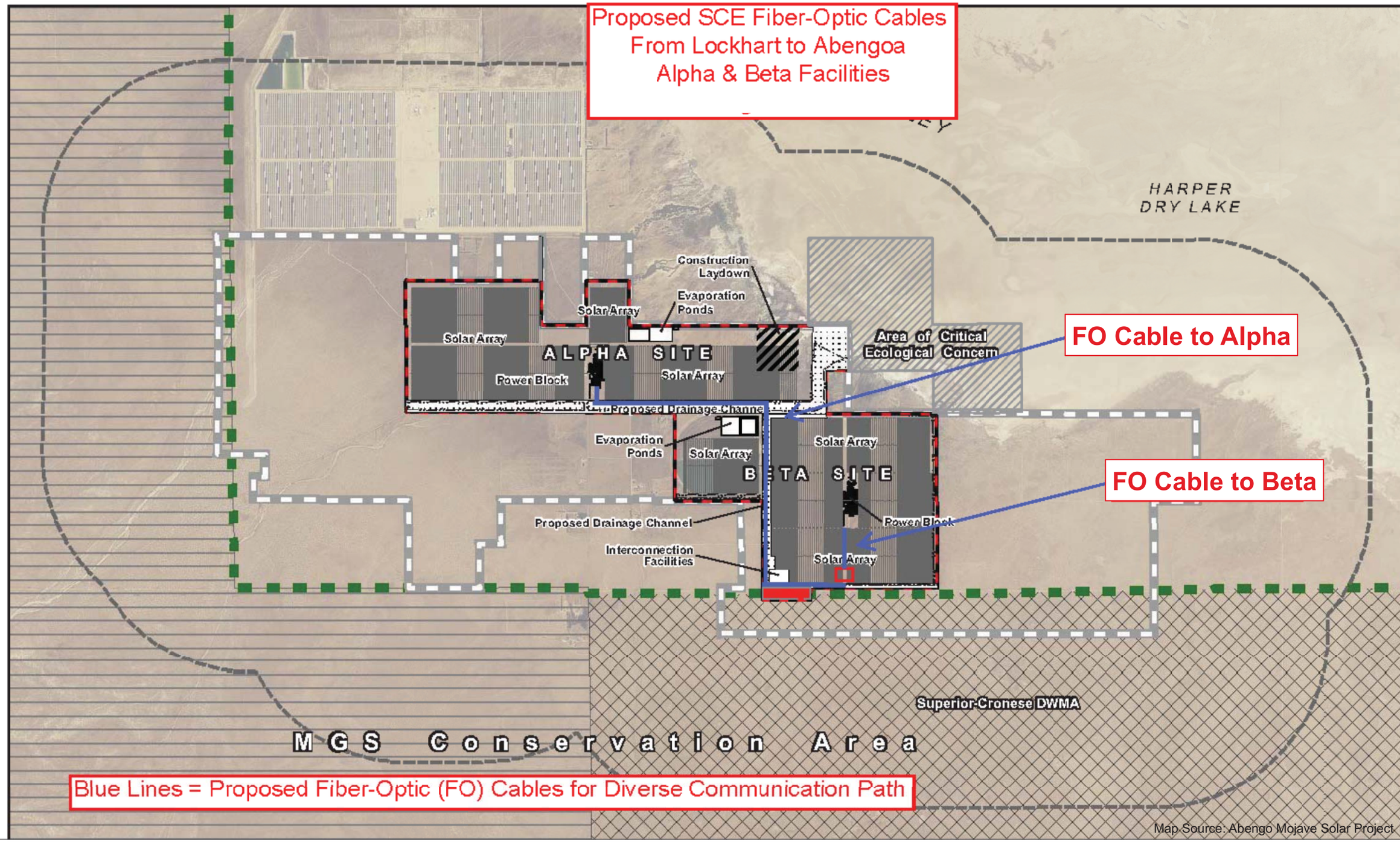

SOUTHERN CALIFORNIA EDISON
An EDISON INTERNATIONAL Company

FIGURE 3-5
PROPOSED NEW TELECOMMUNICATION FIBER OPTIC CABLES CONNECTING NEW SCE LOCKHART SUBSTATION TO ABENGOA ALPHA AND BETA FACILITIES

Features depicted herein are planning level accuracy, and intended for informational purposes only. Distances and locations may be distorted at this scale. Always consult with the proper legal documents or agencies regarding such features.
© Real Properties - Survey and Mapping.

LEGEND
PROPOSED NEW LOCKHART SUBSTATION TO ABENGOA FACILITIES FIBER OPTIC CABLE

NOTE: MAP FOR PROPOSED NEW TELECOMMUNICATION FIBER OPTIC CABLES ONLY, REFER TO PROPOSED NEW SCE LOCKHART SUBSTATION LOCATION ON FIGURE 1.

N W E S

P:\GISData\Projects\MasterData\Major Transmission Projects\LockhartProject\2010\NOT20081925_Interconnection_Maps\MXD_April022010_Rev2\Figure 3-5 Proposed Telecomm abengoa.mxd 4/02/2010

SOUTHERN CALIFORNIA EDISON
An EDISON INTERNATIONAL™ Company

FIGURE 3-6
PROPOSED NEW TELECOMMUNICATION FIBER OPTIC CABLE CONNECTING KRAMER SUBSTATION TO VICTOR SUBSTATION

Features depicted herein are planning level accuracy, and intended for informational purposes only. Distances and locations may be distorted at this scale. Always consult with the proper legal documents or agencies regarding such features.
© Real Properties - Survey and Mapping.

Thomas Bros. Maps is a registered trademark of Rand McNally & Company. Reproduced with permission granted by Rand McNally & Company.
© Rand McNally & Company. All rights reserved.

Legend

Proposed Telecommunication Path
- Kramer-Victor Path
- Kramer-Lockhart Path
- Lockhart-Tortilla Path
- Coolwater-Tortilla Path (Under Permitting)

- Proposed Lockhart Substation
- Existing Substation (SCE, 2010)
- Mohave Solar (Abengoa Solar Inc.) Plant Site

- Freeways (TBM, 2008)
- Highways (TBM, 2008)
- Railroads (TBM, 2008)

- County Boundary (TBM, 2008)
- City Boundary (TBM, 2008)

Hydrology Areas (TBM, 2008)
- Perennial
- Dry

N W E S

0 1.25 2.5 5 Miles

P:\GISData\Projects\MasterData\Major Transmission Projects\LockhartProject\2010\NOT200819625_Interconnection_Maps\MXD_April\022010_Rev2\Figure 3-6 Proposed Telecomm KRAMER TO VICTOR Rev2.mxd DATE: 4/02/2010

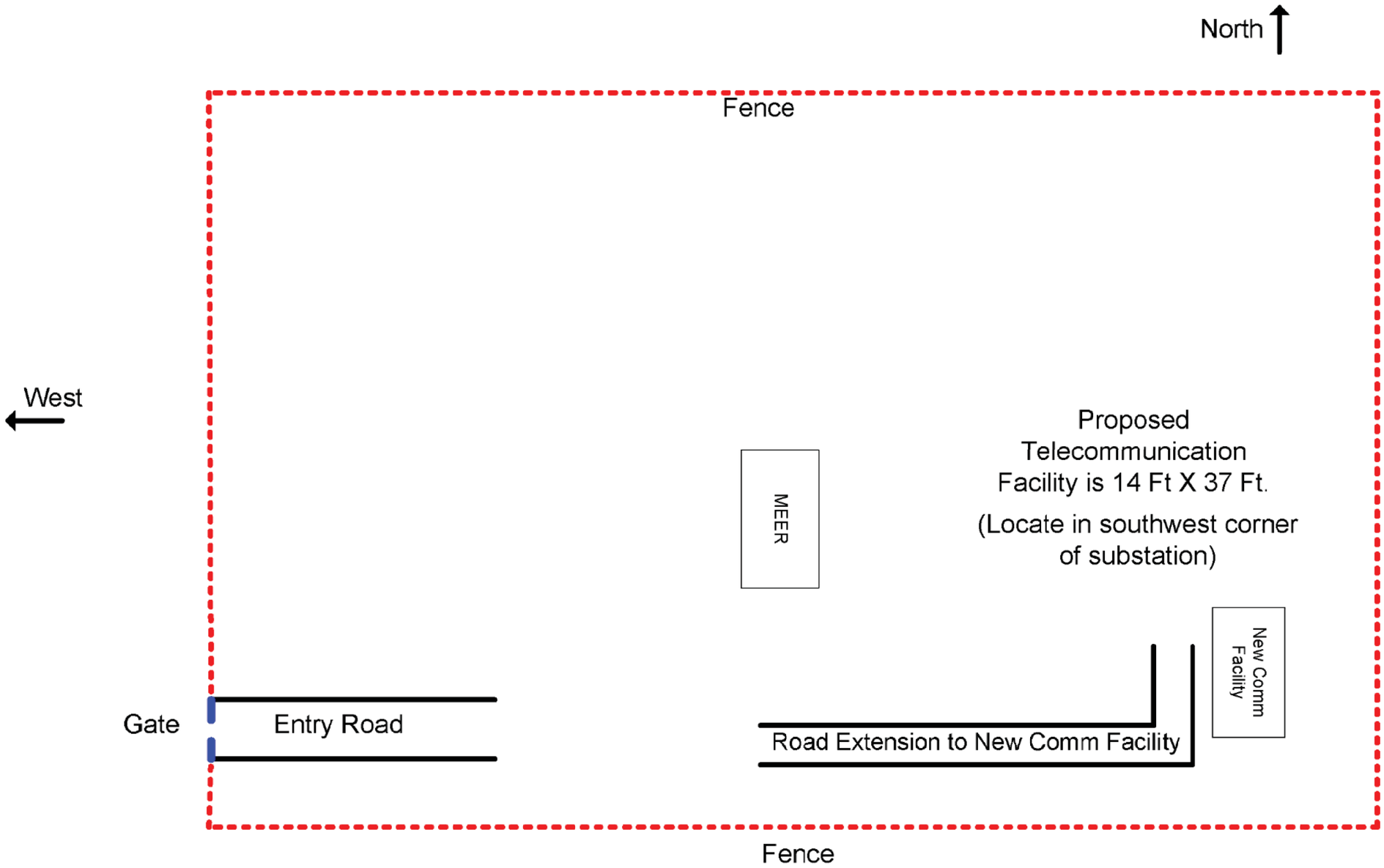

NOTE: For illustrative purposes, not to scale.

SOUTHERN CALIFORNIA EDISON
An EDISON INTERNATIONAL™ Company

FIGURE 3-7
PROPOSED NEW TELECOMMUNICATION FACILITY
AT TORTILLA SUBSTATION

Features depicted herein are planning level accuracy, and intended for informational purposes only. Distances and locations may be distorted at this scale. Always consult with the proper legal documents or agencies regarding such features.
© Real Properties - Survey and Mapping.

N W E S

P:\GISData\Projects\MasterData\Major Transmission Projects\LockhartProject2010\NOT20081962S_Interconnection_Maps\MXD_April022010_Rev2\Figure 3-7 Proposed Telecomm Facility Tortilla.mxd 4/02/2010

DOUBLE 220KV

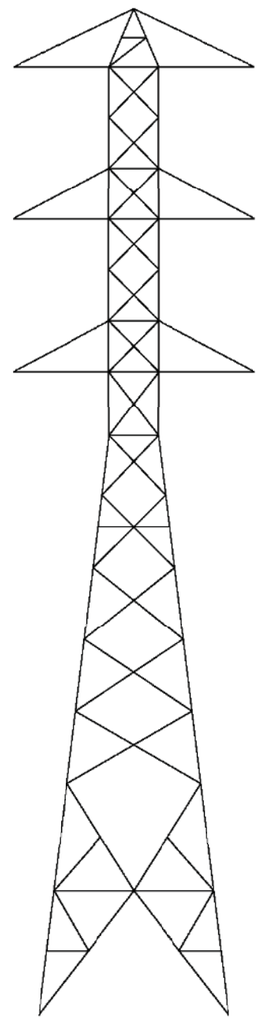

SOUTHERN CALIFORNIA EDISON
An EDISON INTERNATIONAL℠ Company

FIGURE 4-1
220KV LATTICE STEEL
TOWER CONFIGURATION

Features depicted herein are planning level accuracy, and intended for informational purposes only. Distances and locations may be distorted at this scale. Always consult with the proper legal documents or agencies regarding such features.
© Real Properties, Survey and Mapping

P:\GISData\Projects\Master\Data\Major Transmission Projects\LockhartProject\2010\NOT200819625_Interconnection_Maps\Figure 4 - 220 kV Lattice Steel Tower Configuration.mxd 3/12/2010

DOUBLE CIRCUIT
220KV TSP

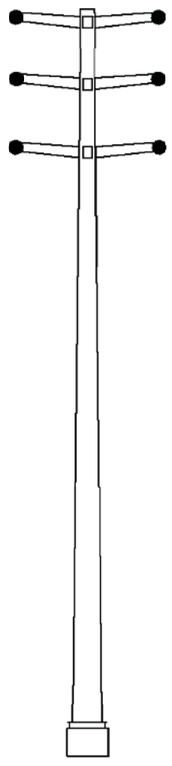

SINGLE CIRCUIT
220KV TSP

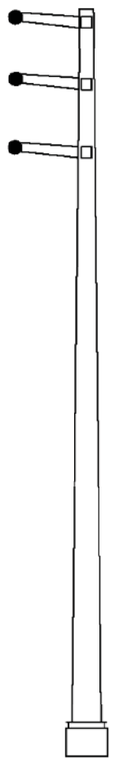

SOUTHERN CALIFORNIA EDISON
An EDISON INTERNATIONAL® Company

FIGURE 4-2
220KV TUBULAR STEEL
POLE CONFIGURATION

Features depicted herein are planning level accuracy, and intended for informational purposes only. Distances and locations may be distorted at this scale. Always consult with the proper legal documents or agencies regarding such features.
© Real Properties, Survey and Mapping

P:\GISData\Projects\MasterData\Major Transmission Projects\LockhartProject\2010\NOT200819625_Interconnection_Maps\Figure 4-2 220 kV TSP Pole Configuration.mxd 3/12/2010

Typical Pole Heads/Clearance

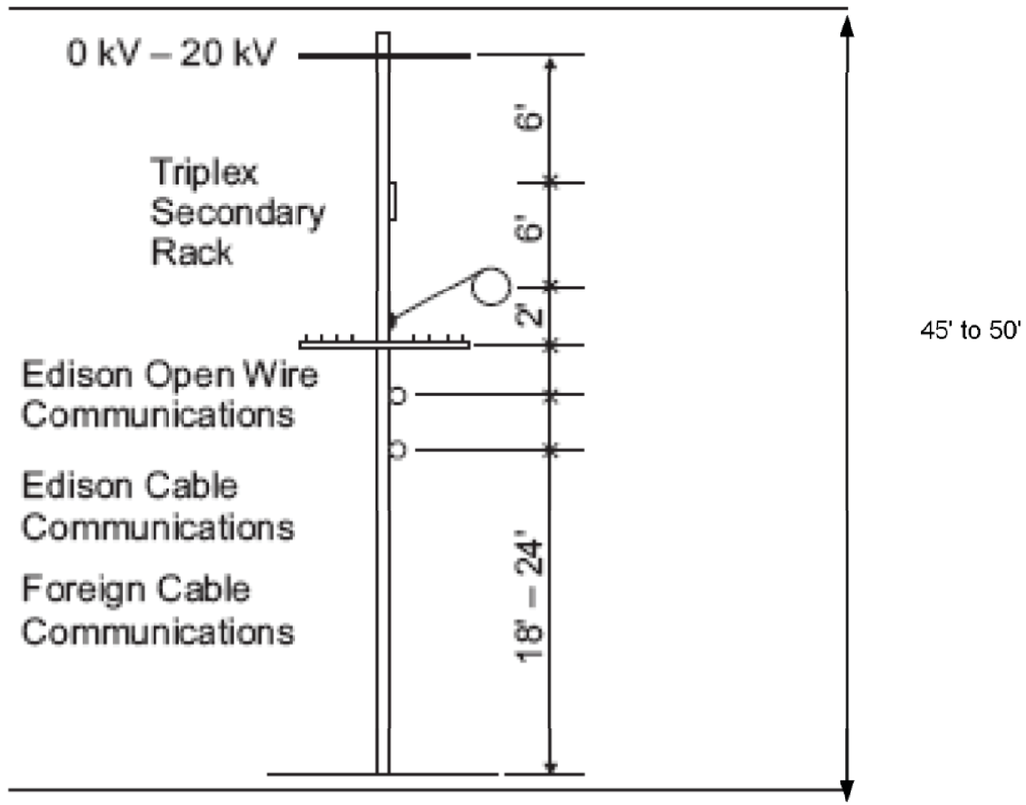

SOUTHERN CALIFORNIA EDISON
An EDISON INTERNATIONAL™ Company

FIGURE 5
DISTRIBUTION POLE CONFIGURATION

Features depicted herein are planning level accuracy, and intended for informational purposes only. Distances and locations may be distorted at this scale. Always consult with the proper legal documents or agencies regarding such features.
© Real Properties, Survey and Mapping

P:\GISData\Projects\MasterData\Major Transmission Projects\LockhartProject\2010\NOT200819625_Interconnection_Maps\Figure 5 - Pole Configuration.mxd 3/5/2010

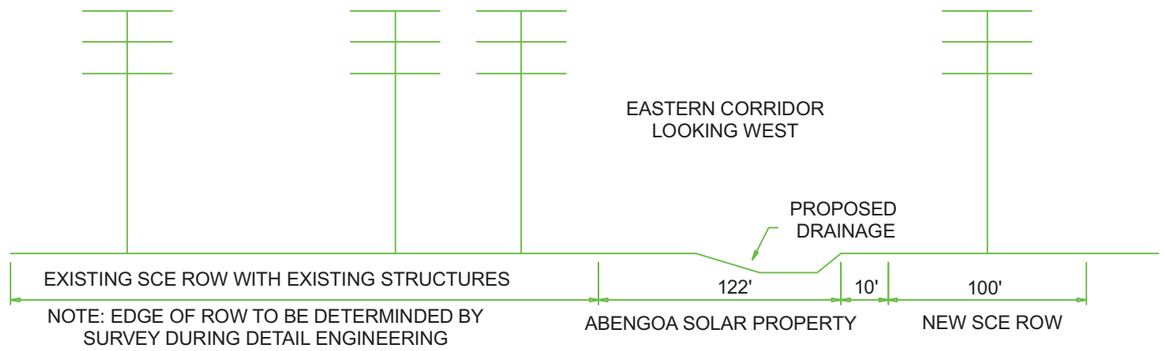

SECTION A - A

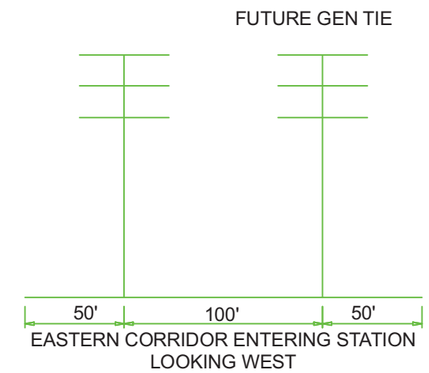

SECTION B - B

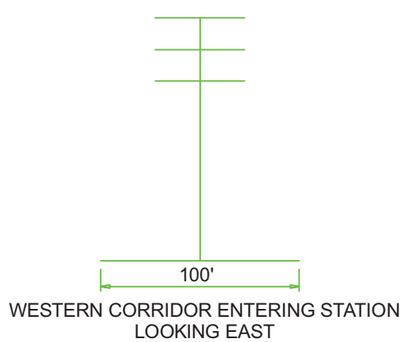

SECTION C - C

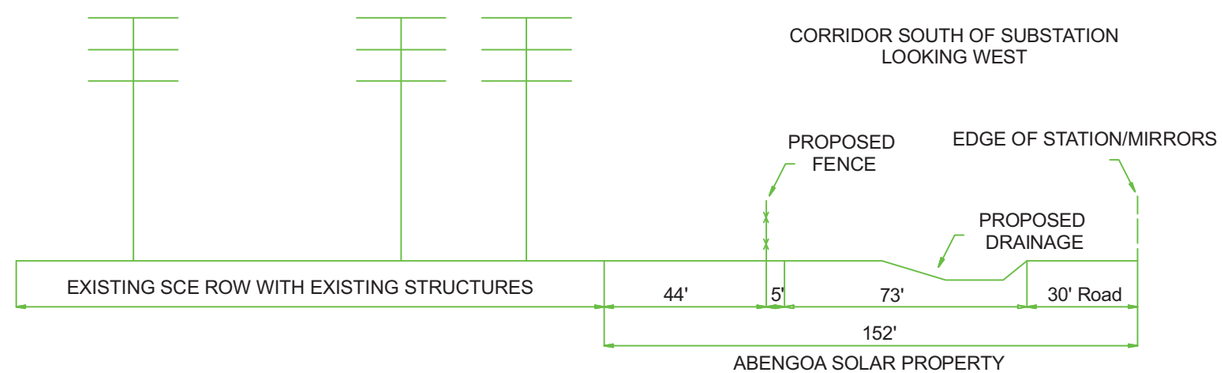

SECTION D- D

SOUTHERN CALIFORNIA EDISON
An EDISON INTERNATIONAL Company

FIGURE 6
CROSS SECTIONS

Features depicted herein are planning level accuracy, and intended for informational purposes only. Distances and locations may be distorted at this scale. Always consult with the proper legal documents or agencies regarding such features.
© Real Properties, Survey and Mapping

P:\GISData\Projects\MasterData\Major Transmission Projects\LockhartProject\2010\NOT200819825_Interconnection_Maps\MXD_April\22010_Rev2\Figure 6 - Cross Section.mxd 4/7/2010

115KV H-FRAME

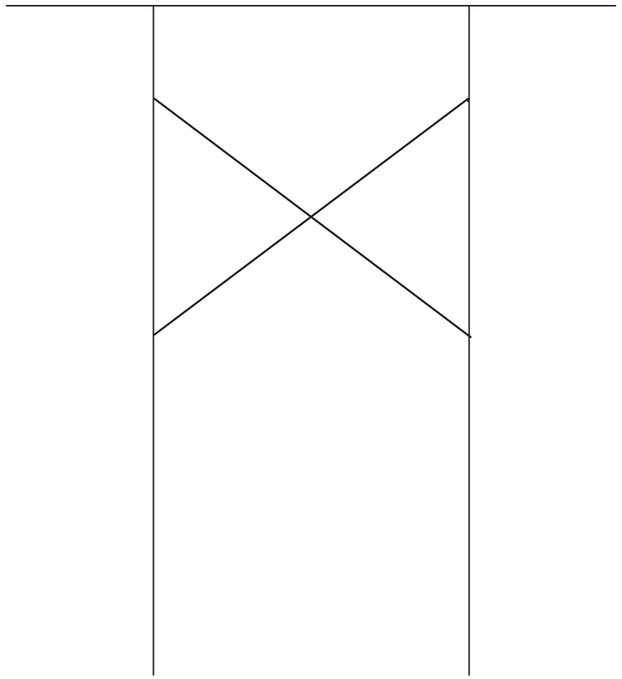

SOUTHERN CALIFORNIA EDISON
An EDISON INTERNATIONAL™ Company

FIGURE 7
TYPICAL 115 KV H-FRAME SUBTRANSMISSION STRUCTURE

Features depicted herein are planning level accuracy, and intended for informational purposes only. Distances and locations may be distorted at this scale. Always consult with the proper legal documents or agencies regarding such features.
© Real Properties, Survey and Mapping

P:\GISData\Projects\MasterData\Major Transmission Projects\LockhartProject\2010\NOT200819625_Interconnection_Maps\MXD_April022010_Rev2\Figure 7 - H Frame.mxd 4/9/2010

Best Management Practices (BMP's)

BMP NO.	BMP DESCRIPTION
AIR QUALITY	
AIR-1	The construction activities would be in compliance with AQMD requirements, as applicable to the project,
AESTHETICS AND VISUAL RESOURCES	
AES-1	LSTs and TSPs would be galvanized steel with a dulled grey finish that minimizes reflected light.
AES-2	Insulators that minimize reflection of light would be utilized.
AES-3	Substation equipment would have materials that minimize reflective light.
AES-4	If chain link fence is used, it would have a dulled-finish.
AES-5	The substation lighting would be designed to be manually operated for non-routine nighttime work.
BIOLOGICAL RESOURCES	
BIO-1	Preconstruction biological clearance surveys would be conducted to identify special-status plants and wildlife.
BIO-2	SCE would prepare a Worker Environmental Awareness Program (WEAP). All construction crews and contractors would be required to participate in WEAP training prior to starting work on the project.
BIO-3	All transmission and subtransmission towers and poles would be designed to be avian-safe in accordance with the suggested practices for Avian Protection on Power Lines: the State of the Art in 2006 (Avian Power Line Interaction Committee 2006).
CULTURAL RESOURCES	
CR-1	A cultural resource inventory of the project area would be conducted for cultural resources prior to any disturbance. All surveys would be conducted and documented as per applicable laws, regulations, and guidelines.
CR-2	To the extent feasible, all ground-disturbing activities shall be sited to avoid or minimize impacts to cultural resources listed as, or potentially-eligible for listing as, unique archaeological sites, historical resources, or historic properties.
CR-3	A protective buffer zone would be established and maintained around each recorded archaeological site within or immediately adjacent to the ROW.
PALEONTOLOGY RESOURCES	
PALEO-1	A paleontologist would conduct a pre-construction field survey of the project area.
PALEO-2	Prior to construction, a certified paleontologist would supervise monitoring of construction excavations.
GEOLOGY AND SOILS	
GEO-1	Prior to final design of substation facilities, and transmission and, a

	combined geotechnical engineering and engineering geology study would be conducted to identify site-specific geologic conditions and potential geologic hazards in sufficient detail to support sound engineering practices.
GEO-2	For new substation construction, specific requirements for seismic design would be followed based on the Institute of Electrical and Electronic Engineers' 693 "Recommended Practices for Seismic Design of Substations".
GEO-3	New access roads, where required, would be designed to minimize ground disturbance during grading.
GEO-4	Cut and fill slopes would be minimized by a combination of benching and following natural topography where feasible.
GEO-5	Any disturbed areas associated with temporary construction would be returned to preconstruction conditions (to the extent feasible) after the completion of project construction.
HAZARDS AND HAZARDOUS WASTE	
HAZ-1	A Phase I ESA would be performed at each new or expanded substation location and along newly acquired transmission subtransmission line ROWs.
HAZ-2	SCE would implement standard fire prevention and response practices for the construction activities.
HAZ-3	As applicable, SCE would follow fire codes per Cal Fire Power Line Fire Prevention Fire Guide requirements for vegetation clearance during construction of the project to reduce the fire hazard potential.
HAZ-4	Hazardous materials and waste handling would be managed in accordance with the following SCE plans and programs: • *Spill Prevention, Countermeasure, and Control Plan (SPCC Plan).* In accordance with Title 40 of the CFR, Part 112, SCE would prepare a SPCC for proposed and/or expanded substations, as applicable. • *Hazardous Materials Business Plans (HMBPs).* Prior to operation of new or expanded substations, SCE would prepare or update and submit, in accordance with Chapter 6.95 of the CHSD, and Title 22 CCR, an HMBP, as applicable. • *Storm Water Pollution Prevention Plan (SWPPP):* A project-specific construction SWPPP would be prepared and implemented prior to the start of construction of the transmission line and substation. • *Health and Safety Program:* SCE would prepare and implement a health and safety program to address site-specific health and safety issues. • *Hazardous Materials and Hazardous Waste Handling:* A project-specific hazardous materials management and hazardous waste management program would be developed prior to initiation of the

	project. Material Safety Data Sheets would be made available to all Project workers • *Emergency Release Response Procedures:* An Emergency Response Plan detailing responses to releases of hazardous materials would be developed prior to construction activities. All construction personnel, including environmental monitors, would be aware of state and federal emergency response reporting guidelines.
HAZ-5	Hazardous materials would be used or stored and disposed of in accordance with Federal, State, and Local regulations.
HAZ-6	The substation would be grounded to limit electric shock and surges that could ignite fires.
HAZ-7	All construction and demolition waste would be removed and transported to an appropriately permitted disposal facility.
HYDROLOGY AND WATER QUALITY	
HYDRO-1	Construction equipment would be kept out of flowing stream channels as feasible.
HYDRO-2	Towers would be located to avoid active drainage channels, especially downstream of steep hill slope areas, to minimize the potential for damage.
LAND USE	
LAND USE-1	SCE shall provide 14 days of advance notice of the start of construction to property owners located within 300 feet of construction-related activities.
NOISE	
NOISE-1	SCE would comply with local noise ordinances.
TRANSPORTATION AND TRAFFIC	
TRANS-1	Traffic control services would be used for equipment, supply delivery, and conductor stringing, as applicable.
TRANS-2	Construction traffic would be scheduled for off-peak hours to the extent feasible and would not block emergency equipment routes.
TRANS-3	If work requires modifications or activities within local roadway and railroad ROWs, appropriate permits would be obtained prior to the commencement of construction activities.

APPENDIX G

LAND USE

Appendix G: Land Use Appendix

San Bernardino General Plan Goals and Policies for the Desert Region.

Land Use Policy applicable to the Desert Region:

Policy D/LU 1.3. Utilize Rural Living (RL) areas to buffer Resource Conservation (RC) areas from more intensive land uses.

County-wide Land Use Policies:

Policy LU 1.1 Develop a well-integrated mix of residential, commercial, industrial, and public uses that meet the social and economic needs of the residents in the three geographic regions of the county: Valley, Mountain, and Desert.

Policy LU 1.2 The design and siting of new development would meet locational and development standards to ensure compatibility of the new development with adjacent land uses and community character.

Policy LU 1.3 Promote a mix of land uses that are fiscally self-sufficient.

Policy LU 4.1 Protect areas best suited for industrial activity by virtue of their location and other criteria from residential and other incompatible uses.

Policy LU 11.1 Foster intergovernmental cooperation among Federal, state, and local agencies on key land use decisions.

Policy LU 11.2 Establish a "review area" around each state, military, or other Federal installation, and review development proposals within each review area with the appropriate agency.

Conservation Element

Conservation Policies applicable to the Desert Region:

Policy D/CO 1.1 Encourage the greater retention of existing native vegetation for new development projects to help conserve water, retain soil in place, and reduce air pollutants.

Policy D/CO 1.2 Require future land development practices to be compatible with the existing topography and scenic vistas, and protect the natural vegetation.

Policy D/CO 1.4 Reduce disturbances to fragile desert soils as much as practicable in order to reduce fugitive dust. The county shall consider the following in the development of provisions to limit clearing:

a) Parcels of 1 acre or larger shall not be disturbed or cleared of natural vegetation unless for the installation of building pads, driveways, landscaping, agriculture, or other reasonable uses associated with the primary use of the land, including fire clearance areas.

b) Fire abatement or local clean-up efforts shall be accomplished by mowing or means other than land scraping whenever possible to minimize fugitive dust and

windblown sand. When de-brushing or blading is considered the most feasible alternative, additional methods shall be required for erosion control.

c) The County Office of Building and Safety may issue permits for further grading or clearance of vegetation subject to proper review.

Policy D/CO 1.5 Mechanical removal of vegetation shall be minimized and limited to the building pad, driveway, and areas prepared for permitted accessory uses.

Policy D/CO 1.8 Require future development to utilize water conservation techniques.

Policy D/CO 1.9 Promote conservation of water by implementing the following policies/actions:

a) Encourage the use of pervious paving materials on commercial, industrial and institutional parking areas. Large parking areas should consider using landscape areas as depressions to receive and percolate runoff as an alternative.

b) If a wastewater treatment system is developed within the region, the system which would reclaim the treated effluent and make it available for public or private landscape purposes.

Policy D/CO 1.12 Development requiring tract maps or conditional use permits within the county Biological Resources Overlay for desert tortoise shall prepare and submit a focused biological resources survey and a desert tortoise protocol survey per U.S. Fish and Wildlife requirements.

Policy D/CO 1.13 The County shall support the preparation of a regional Habitat Conservation Plan (HCP) for the desert tortoise and the Mojave Ground Squirrel. This support shall be in the form of providing its fair share portion of the funding to develop desert tortoise and ground squirrel HCP in cooperation with other local jurisdictions, the U. S. Fish and Wildlife Service, Department of Fish and Game and Bureau of Land Management. Funds may be obtained from developer fees in the appropriate habitats.

Policy D/CO 3.1 Protect the Night Sky by providing information about and enforcing existing ordinances:

a) Provide information about the Night Sky ordinance and lighting restrictions with each land use or building permit application.

b) Review exterior lighting as part of the design review process.

Policy D/CO 3.2 All outdoor lighting, including street lighting, shall be provided in accordance with the Night Sky Protection Ordinance and shall only be provided as necessary to meet safety standards.

Conservation Policies for Desert Agricultural Land and Soils:

Policy D/CO 4.2 The conversion of agricultural land to non-agricultural uses shall be discouraged unless the proposed use can be demonstrated to be preferable in terms of economic development, and resource availability and resource conservation.

Policy D/CO 5.1 Desert playas shall not be used for habitable structures nor have large quantities of waters applied to them, except for mining operations or to maintain existing wetlands.

Conservation Policies for Desert Cultural and Paleontological Resources:

Policy D/CO 6.1 Identify and protect significant cultural resources from damage or destruction.

Policy D/CO 6.2 Inventory Cultural Resources, encouraging inputs from the local historical society and committees.

Policy D/CO 6.3 Prepare a Historical/Archeological Overlay for community plan areas in developing land use designations and the formulation and evaluation of plan amendments and development proposals to provide a more systematic and streamlined method of protecting important cultural resources.

County-wide Conservation Element Policies:

Policy CO 2.1 The county would coordinate with state and Federal agencies and departments to ensure that their programs to preserve rare and endangered species and protect areas of special habitat value, as well as conserve populations and habitats of commonly occurring species, are reflected in reviews and approvals of development programs.

Policy CO 2.3 In addition to conditions of approval that may be required for specific future development proposals, the county shall establish long-term comprehensive plans for the county's role in the protection of native species because preservation and conservation of biological resources are statewide, Regional, and local issues that directly affect development rights. The conditions of approval of any land use application approved with the Biological Resources (BR) overlay district shall incorporate the mitigation measures identified in the report required by Section 82.13.030 (Application requirements), to protect and preserve the habitats of the identified plants and/or animals.

Policy CO 2.4 All discretionary approvals requiring mitigation measures for impacts to biological resources would include the condition that the mitigation measures be monitored and modified, if necessary, unless a finding is made that such monitoring is not feasible.

County-wide Cultural/Paleontological Resource Conservation:

Policy CO 3.1 Identify and protect important archaeological and historic cultural resources in areas of the County that have been determined to have known cultural resource sensitivity.

Policy CO 3.2 Identify and protect important archaeological and historic cultural resources in all lands that involves disturbance of previously undisturbed ground.

Policy CO 3.4 The County would comply with Government Code Section 65352.2 (SB 18) by consulting with tribes as identified by the California Native American Heritage Commission on all General Plan and specific plan actions.

Policy CO 3.5 Ensure that important cultural resources are avoided or minimized to protect Native American beliefs and traditions.

County-wide Conservation of Air Quality:

Policy CO 4.2 Coordinate air quality improvement technologies with the South Coast Air Quality Management District (SCAQMD) and the Mojave Air Quality Management District (MAQMD) to improve air quality through reductions in pollutants from the region.

County-wide Water Conservation:

Policy CO 5.2 The county Water Masters would continue to monitor the county's adjudicated groundwater basins to ensure a balanced hydrological system in terms of withdrawal and replenishment of water from groundwater basins.

Policy CO 5.3 The county would promote conservation of water and maximize the use of existing water resources by promoting activities/measures that facilitate the reclamation and reuse of water and wastewater.

Policy CO 5.4 Drainage courses would be kept in their natural condition to the greatest extent feasible to retain habitat, allow some recharge of groundwater basins and resultant savings. The feasibility of retaining features of existing drainage courses would be determined by evaluating the engineering feasibility and overall costs of the improvements to the drainage courses balanced with the extent of the retention of existing habitat and recharge potential.

County-wide Conservation of Soils and Agricultural Resources:

Policy CO 6.1 Protect prime agricultural lands from the adverse effects of urban encroachment, particularly increased erosion and sedimentation, trespass, and non-agricultural land development.

Policy CO 6.3 Preservation of prime and statewide important soils types, as well as areas exhibiting viable agricultural operations would be considered as an integral portion of the Open Space element when reviewing development proposals.

Policy CO 6.4 Provide and maintain a viable and diverse agricultural industry in San Bernardino County.

Energy Element

Policy CO 8.1 Maximize the beneficial effects and minimize the adverse effects associated with the siting of major energy facilities. The county would site energy facilities equitably in order to minimize net energy use and consumption of natural resources, and avoid inappropriately burdening certain communities. Energy planning should conserve energy and reduce peak load demands, reduce natural resource consumption, minimize environmental impacts, and treat local communities fairly in providing energy efficiency programs and locating energy facilities.

Policy CO 8.2 Conserve energy and minimize peak load demands through the efficient production, distribution and use of energy.

Policy CO 8.3 Assist in efforts to develop alternative energy technologies that have minimum adverse effect on the environment, and explore and promote newer opportunities for the use of alternative energy sources.

Policy CO 10.1 Electric infrastructure is essential to serve growth and development in the county. Effective planning for electrical infrastructure requires collaboration between the major utilities and the county.

Policy CO 10.2 The location of electric facilities should be consistent with the county's General Plan, and the General Plan should recognize and reflect the need for new and upgraded electric facilities.

Safety Element

Policy S 8.1. Ensure the safety of airport operations and surrounding land uses Programs

c) Adopt the Land Use Compatibility / Aviation chart as applicable to all discretionary and ministerial applications for Safety Overlay Districts delineated on the Hazards Overlay Maps. Safety areas are defined as follows:

(1) That area defined within an adopted Airport Comprehensive Land Use Plan

(2) That area defined within an adopted Interim Airport Land Use Plan (where there is no adopted Airport Comprehensive Land Use Plan)

(3) That area defined within a low-altitude/high-speed corridor designated for military aircraft operations.

APPENDIX H

VISUAL

Appendix H: Visual Resource

Conformity of Mojave Solar Project with the San Bernardino County General Plan.

The County Development Code implements the San Bernardino General Plan by classifying and regulating the uses of land within unincorporated San Bernardino County; by preserving and protecting the County's important agricultural, cultural, natural, open space and scenic resources; and by protecting and promoting the public health, safety, comfort, convenience, prosperity, and general welfare of residents and businesses in the County (San Bernardino County. 2009c). More specifically, the purposes of the Development Code are to:

[a] Provide standards and guidelines for the continuing orderly growth and development of the County that will assist in protecting the character and identity of San Bernardino County and its distinct communities.

[b] Conserve and protect the County's important agriculture, cultural, natural, open space and scenic resources.

[c] Create a comprehensive and stable pattern of land uses upon which to plan transportation, water supply, sewerage, energy, drainage/flood control and other public facilities and utilities.

[d] Encourage the most appropriate uses of land in order to prevent overcrowding of land and avoid undue concentration of population, and maintain and protect the value of property.

[e] Ensure compatibility between different types of development and land use.

According to the San Bernardino General Plan, Circulation and Infrastructure Element,

A highway's designation as "scenic" depends upon the amount of natural landscape can be seen by individuals traveling along its route and the extent to which development intrudes upon this view. The boundaries of a scenic corridor generally encompass the land adjacent to and visible from the highway, using a motorist's line of sight. A reasonable boundary is selected when the view extends to the distant horizon. No restrictions are placed on officially designated scenic highways in terms of improvements or further development, but all proposed Projects are reviewed by Caltrans and the appropriate agencies to ensure the protection of the scenic corridors to the maximum extent feasible.

Because the issue of scenic routes or corridors touches on a number of the elements of the General Plan, the goals and policies for this issue could be placed in any one of these elements. The County has determined, however, that the primary goal of scenic routes is to conserve the scenic qualities of these routes and has therefore included the goals and policies for scenic routes into the Conservation Element.

Table H-1: Conformity of Mojave Solar Project with the San Bernardino County General Plan

Provision	Conformity
Land Use Element	
Desert Region Goal D/LU 2: Establish locational criteria for future development within the region to ensure compatibility between uses and with the character and vision that is desired for the region.	Yes. Implementation of the proposed Project would have no effect on the County's ability to establish criteria for locating future development in the region.
Desert Region Goal D/LU 3: Ensure that commercial and industrial development within the region is compatible with the rural desert character and meets the needs of local residents.	Yes. Implementation of the proposed Project would have no effect on the County's ability to ensure that commercial and industrial development is compatible with the area's character while meeting the needs of the public. Additionally, the AMSP is compatible with the existing character of the adjacent SEGS VIII and IX facilities that were constructed in the 1990s.
Desert Region Policy D/LU 3.1: The County shall develop standards for commercial development within the region to best reflect the character of the region. Standards may include, but not be limited to signage, screening, pedestrian access, parking, and buffering between adjacent land uses.	Yes. Implementation of the Project would have no effect on the County's ability to develop standards for commercial development.
Circulation Element	
Desert Region Goal D/CI 1: Ensure a safe and effective transportation system that provides adequate traffic movement while preserving the rural desert character of the region.	Yes. Implementation of the proposed Project would have no effect on the County's ability to ensure a safe and effective transportation system while preserving the desert's character. Local roads internal to the Project would be improved.
Desert Region Policy D/CI 1.2: Design roads to follow natural contours, avoid grid pattern streets, and minimize cuts and fills and disturbance of natural resources and trees wherever possible.	Yes. Access to the proposed Project would be provided by the existing Harper Lake Road, which would be improved. Existing roads in the area follow a grid pattern on flat terrain, which would follow the County's policy to the extent feasible.
GOAL D/CI 2: Ensure that infrastructure improvements are compatible with the natural environment of the region.	Yes. Infrastructure of the proposed Project would be compatible with the natural environment of the region because the proposed solar fields and power islands would be situated on flat, planar lands in a desert environment with high solar insolation.
D/CI 2.1: Retain the natural channel bottom for all storm water drainage facilities and flood control channels when such facilities are required for a specific development. This protects wildlife corridors and prevents loss of critical habitat in the region.	Yes. New drainage channels would have natural bottoms and sidewalls would be armored with a gabion mattress. Wildlife movement into the AMSP/Lockhart Substation would be restricted by perimeter chain link fencing with tortoise barriers.

Provision	Conformity
Desert Region Goal D/CI 3: Encourage property maintenance to enhance regional aesthetics with the promotion of water and soil conservation, recycling, and proper solid waste disposal.	Yes. Water recycling is proposed as part of the AMSP, soil erosion would be minimized during Project construction, and solid waste disposal would be conducted in accordance with applicable local, state, and federal regulations.
Conservation Element	
Countywide Goal CO 1: The County will maintain to the greatest extent possible natural resources that contribute to the quality of life within the County.	Yes. Implementation of the AMSP/Lockhart Substation would have no effect on the County's ability to maintain the County's natural resources. The AMSP/Lockhart Substation site is substantially disturbed and has no designation for any resources with the exception of rural resources.
Countywide Policy CO 1.2: The preservation of some natural resources requires the establishment of a buffer area between the resource and developed areas. The County will continue the review of the Land Use Designations for unincorporated areas within one mile of any state or federally designated scenic area, national forest, national monument, or similar area, to ensure that sufficiently low development densities and building controls are applied to protect the visual and natural qualities of these areas.	Yes. Implementation of the AMSP/Lockhart Substation would have no effect on the County's ability to review land use designations in unincorporated areas to protect the visual and natural qualities of the areas near state or federally designated scenic areas, national forests, national monuments, or similar areas. The proposed AMSP/Lockhart Substation site is zoned RL which allows electric power generation and it avoids areas that are zoned RC, which are areas typically near undeveloped Federal lands.
Desert Region Goal D/CO 1: Preserve the unique environmental features and natural resources of the Desert Region, including native wildlife, vegetation, water, and scenic vistas.	Yes. Implementation of the AMSP/Lockhart Substation would have no effect on the County's ability to preserve the Desert Region's scenic vistas. The AMSP/Lockhart Substation site is mostly fallow farmland with one currently irrigated crop circle and the site is not located within a designated scenic area.
Desert Region Policy D/CO 1.2: Require future land development practices to be compatible with the existing topography and scenic vistas, and protect the natural vegetation.	Yes. Implementation of the AMSP/Lockhart Substation would have no effect on the County's ability to require future development to be compatible with the existing topography, scenic vistas, and natural vegetation. The AMSP/Lockhart Substation site is mostly fallow farmland with one currently irrigated crop circle and the site does not currently support native desert vegetation.

Provision	Conformity
Desert Region Policy D/CO 1.3: Require retention of existing native vegetation for new development Projects, particularly Joshua trees, Mojave yuccas and creosote rings, and other species protected by the Development Code and other regulations.	Yes. Implementation of the AMSP/Lockhart Substation would have no effect on the County's ability to require future development to retain existing native vegetation for new development Projects. The AMSP/Lockhart Substation site has no Joshua trees, Mojave yuccas and creosote rings, and other species protected by the Development Code and other regulations.
Desert Region Goal D/CO 2: Encourage utilization of renewable energy resources.	Yes. The AMSP is a commercial solar project.
Desert Region Goal D/CO 3: Preserve the dark night sky as a natural resource in the Desert Region communities.	Yes. The AMSP/Lockhart Substation would not affect the night sky in Desert Region communities in California. Project lights that would be turned on at night include: (1) A minimal number of lights would be installed on free-standing poles around the site. These lights would be on for nighttime maintenance activities. Lights would be shielded, directional, and lowest intensity practicable for intended purposes. (2) Vehicle-mounted lights for night maintenance activities (mainly mirror washing).
Desert Region Policy D/CO 3.1: Protect the Night Sky by providing information about and enforcing existing ordinances: b. Review exterior lighting as part of the design review process.	Yes. Implementation of the AMSP/Lockhart Substation would have no effect on the County's ability to provide public information regarding the Night Sky ordinance the County's ability to enforce the ordinance.
Desert Region Policy D/CO 3.2: All outdoor lighting, including street lighting, shall be provided in accordance with the Night Sky Protection Ordinance and shall only be provided as necessary to meet safety standards.	Yes. The AMSP/Lockhart Substation is designed with lighting designed to comply with the Night Sky Protection Ordinance.
Open Space Element	
Countywide Goal OS 4: The County will preserve and protect cultural resources throughout the County, including parks, areas of regional significance, and scenic, cultural, and historic sites that contribute to a distinctive visual experience for visitors and quality of life for County residents.	Yes. Implementation of the AMSP/Lockhart Substation would have no effect on the County's parks, areas of regional significance, scenic areas, or visually important sites that contribute to a distinctive visual experience for visitors and quality of life for County residents.
Countywide Goal OS 5: The County will maintain and enhance the visual character of scenic routes in the County.	Yes. The AMSP/Lockhart Substation would not be visible from SR 58, and eligible State Scenic Highway, because of topographic screening.

Provision	Conformity
Countywide Policy OS 5.3 The County desires to retain the scenic character of visually important roadways throughout the County. A "scenic route" is a roadway that has scenic vistas and other scenic and aesthetic qualities that over time have been found to add beauty to the County. Therefore, the County designates the following routes as scenic highways and applies all applicable policies to development on these routes.	Yes. The AMSP/Lockhart Substation would not be visible from any County designated scenic route.
Countywide Policy OS 7.5: Require that natural landform and ridgelines be preserved by using the following measures: Keep cuts and fills to an absolute minimum during the development of the area. Require the grading contours that do occur to blend with the natural contours onsite or to look like contours that would naturally occur. Encourage the use of custom foundations in order to minimize disruption of the natural landform. Require that units located in the hillsides be so situated that roof lines will blend with and not detract from the natural ridge outline.	Yes. The AMSP/Lockhart Substation site was selected because of its flat terrain. The Project will not affect ridgelines. Proposed rooflines are shallow gable and shallow shed roofs, in keeping with the flat desert terrain of the AMSP/Lockhart Substation site.
Desert Region Goal D/OS 1: Preserve open space lands to ensure that the rural desert character of the region is maintained.	Yes. The AMSP/Lockhart Substation is located immediately adjacent to two existing transmission lines: the SCE owned Coolwater-Kramer 230kV and the Los Angeles Department of Water and Power (LADWP) owned 500-kV Mead-Adelanto transmission line, both of which are located adjacent to the southern border of the Mojave Solar Project. The existing landscape is crossed by existing overhead high-voltage electric transmission lines; therefore, the AMSP/Lockhart Substation would be compatible with other existing structures in the vicinity.

Table H-2: Conformity of Mojave Solar Project with the San Bernardino County Development Code

Provision	Conformity
83.02.060 Screening and Buffering This Section provides standards for the screening and buffering of adjoining land uses, equipment, and outdoor storage areas, and surface parking areas. Multi-family and nonresidential land uses shall comply with the requirements of this Section. (a) Screening between different land uses.	No. The Applicant does not propose to install plant material or solid masonry walls as architectural screening for the AMSP/Lockhart Substation.

Provision	Conformity
(1) An opaque screen consisting of plant material and a solid masonry wall, a minimum of 6 feet in height, shall be installed along parcel boundaries whenever a commercial or industrial development adjoins a residential land use zoning district. (2) The maximum height of walls shall comply with the provisions of Chapter 83.06 (Fences, Hedges, and Walls) (3) The walls shall be architecturally treated or landscaped on both sides to avoid the appearance of unfinished precision block, subject to the approval of the Director. (4) Minimum sizes of plant materials shall conform to the requirements in Subsection 83.10.070 (d) (Landscape Standards Minimum sizes of plant materials). (b) Mechanical equipment, loading docks, and refuse areas. (1) Roof or ground mounted mechanical equipment (e.g., air conditioning, heating, ventilation ducts and exhaust, etc.), loading docks, refuse storage areas, and utility services shall be screened from public view from adjoining public street and rights-of-way and surrounding area(s) zoned for residential or open space uses. (2) The method of screening shall be architecturally compatible with other on-site development in terms of colors, materials, and architectural style. (3) Landscaping shall be installed adjacent to the walls at the discretion of the Director. (c) Outdoor storage areas. (1) The use of outdoor areas for storage purposes shall be subject to the following standards: (A) Outside storage areas shall be screened with a solid sight-obscuring wall not less than six feet nor more than eight feet in height, of a type and design approved by the Director. The wall shall include sight-obscuring gates. The wall and gate(s) shall be continuously maintained in good repair; and (B) Stored materials shall be kept below the level of the fence or other screening mechanism. (C) Site operations in conjunction with outdoor storage, including the loading and unloading of materials and equipment, shall be conducted	

Provision	Conformity
entirely within a walled area. (D) Exterior storage shall comply with Title 3 (Health and Sanitation and Animal Regulations) of the County Code. (2) Incidental outdoor storage shall be allowed, subject to the above standards. Outdoor storage categorized as a primary land use shall be subject to the applicable permitting requirements identified in Division 2 (Land Use Zoning Districts and Allowed Land Uses) and the above standards.	
83.06 (Fences, Hedges, and Walls) **83.06.030 General Height Limitations** Fences, hedges, and walls may be erected/maintained within required setback areas to the heights identified below: Commercial land use zoning districts – front & side street = 4 ft; Interior side & rear = 10 ft Industrial land use zoning districts – front & side street = 6 ft; Interior side & rear = 10 ft All other land use zoning districts – front & side street = 4 ft; Interior side & rear = 6 ft	No. The Applicant proposes to fence the perimeter of the AMSP/Lockhart Substation for safety and security reasons. The Applicant does not propose to plant hedges or construct fences or walls as part of the AMSP/Lockhart Substation.
83.06.040 Measurement of Fence or Wall Height (a) The height of a fence or wall shall be measured from the finished grade at the location in which the fence or wall is to be located. (b) Where there is a difference in the ground level between two adjacent parcels, the height of a fence or wall constructed along the property line shall be determined by using the finish grade of the lowest contiguous parcel.	No. The Applicant proposes to fence the perimeter of each of the AMSP/Lockhart Substation area for safety and security reasons. The Applicant does not propose to plant hedges or construct fences or walls as part of the AMSP/Lockhart Substation.
83.06.050 Walls Required Between Different Land Use Zoning Districts Walls shall be provided and maintained between different land use zoning districts in the following manner: (a) Nonresidential or multi-family. Where a nonresidential land use district abuts property in any residential land use zoning district or a Multiple Residential Land Use Zoning District abuts property in a Single Residential Land Use Zoning District, a solid masonry wall shall be constructed on the land use zoning district boundary line consistent with the height limitations contained in Table 83-6. If a public right-of-way separates a nonresidential district from any residential district	No. The AMSP/Lockhart Substation does not have walls separating land uses. The Applicant proposes to fence the perimeter of the AMSP/Lockhart Substation area for safety and security reasons. The Applicant does not propose to construct walls as part of the AMSP/Lockhart Substation.

Provision	Conformity
or multi-family residential district from a Single Residential Land Use Zoning District, this wall requirement may not apply. Also, this requirement shall not apply to the Rural Commercial (CR) Land Use Zoning District in the Desert Region. (b) Industrial. Where an industrial land use zoning district abuts property in a nonindustrial land use zoning district, a solid masonry wall, a minimum of 6 feet in height, shall be constructed on the land use zoning district boundary line. (c) Design and construction. Walls shall be of solid masonry construction and shall be of a decorative design when in view of public rights-of-way subject to the approval of the Director. (d) Modification of requirements. The Director may waive or modify requirements for walls between different land use zoning districts where a solid masonry wall already exists on the abutting property if the following findings can be made in a positive manner: (1) The existing wall meets, or would be modified to conform to, the intent of this Chapter. (2) Suitable landscaping would be installed adjacent to the existing wall to supplement and enhance the desired physical separation. (3) The existing wall would be protected to prevent vehicle damage, if necessary. (4) Concurrence of the abutting property owner(s) would be obtained, to modify the existing wall to meet the requirements of this Chapter.	
Chapter 83.07 Glare and Outdoor Lighting **83.07.040 Glare and Outdoor Lighting - Mountain and Desert Regions** This Section provides standards for outdoor lighting in the Mountain and Desert Regions, unless exempt in compliance with Subsection 83.07.040(e) (Exempt lighting and fixtures), below. (a) Residential, commercial and industrial land use zoning districts. The following standards shall apply to all structures and freestanding outdoor light fixtures in all land use zoning districts. (2) Shielding requirements. New permitted lighting for new construction, unless exempt in compliance with Subsection 83.07.040(e) (Exempt lighting and fixtures), below, shall be shielded in compliance with the requirements outlined in Table 83-7	Yes. The Applicant plans to minimize trespass light by shielding light fixtures, and plans to eliminate glare from the AMSP/Lockhart Substation by controlling the orientation of the mirrors.

Provision	Conformity
(Shielding Requirements for Outdoor Lighting in the Mountain Region and Desert Region), in order to preclude light pollution or light trespass on: (A) Adjacent property; (B) Other property within the line of sight (direct or reflected) of the light source; or (C) Members of the public who may be traveling on adjacent roadways or rights-of-way. (b) Determination of light trespass. Light trespass shall be determined in compliance with Subsection 83.07.030(a), above. (d) Additional standards for off-site signs (billboards) and on-site signs. Lighting fixtures used to illuminate a new off-site sign and exterior illuminated on-site signs shall be mounted on the top of the sign structure and shall comply with the shielding requirements.	
Chapter 83.10 Landscaping Standards **83.10.020 Applicability** (a) New uses, structures, and subdivisions. The following land use Projects shall include plans for landscaping, consisting of trees, shrubs, flowers, ground covers, hardscape materials, fencing, walls, or a combination thereof, in the locations and amounts specified in this Chapter. The landscaping shall be installed before issuance of the final Certificate of Occupancy or final Building Permit, except for extensions granted by the Director in compliance with Subsection 83.10.040 (Waiver or Modification of Landscaping Requirements). 1. Single-family residential subdivisions (containing 5 or more parcels), multi-family residential Projects, and nonresidential Projects, except as may be exempted by Section 83.10.030 (Exemptions from Landscaping Requirements), below. 2. Building Permit applications for sites or developments that are within the service area of a public or private water purveyor that has adopted a water conservation policy.	No. The Applicant does not propose to plant landscaping throughout the AMSP/Lockhart Substation site as part of the project. The Applicant proposes to install minimal amounts of native Xeriscape landscaping outside the entrances to the control room and administrative building.
83.10.050 Landscape Plans (a) Landscape plans required. Landscape plans shall be submitted to the Department for Projects specified in Section 83.10.020 (Applicability), above.	No. The Applicant does not propose to provide a Landscape Plan for the proposed project. The Applicant proposes to install minimal amounts of native Xeriscape landscaping outside the entrances to the control room and administrative building.

Provision	Conformity
(b) Content. Landscape plans shall contain information as specified in the instructions for preparing landscape plans provided by the Department. (c) Review and approval. After initial application, the Director shall review each landscape plan to verify its compliance with the provisions of this Chapter. (d) Statement of surety. When required by the Director, a statement of surety in the form of cash, performance bond, letter of credit, or certificate of deposit in an amount equal to 120 percent of the total value of all plant materials, irrigation, installation, and maintenance shall be posted with the County for a two-year period. The Director may require statements of surety for phased development Projects, a legitimate delay in landscape installation due to seasonal requirements (including adverse weather conditions) and similar circumstances where it may not be advisable or desirable to install all of a Project's landscaping before occupancy of a site.	
83.10.060 Landscape Area Requirements (a) General requirements. (1) Setbacks. Setback and open space areas required by this Development Code shall be landscaped, except where a required setback is occupied by a sidewalk or driveway or where a required setback is screened from public view. (2) Unused areas. Areas of a Project site not intended for a specific use shall be landscaped, unless exempt in compliance with Section 83.10.030 (Exemptions from Landscaping Requirements). (3) Parking areas. Parking areas shall be landscaped in compliance with Chapter 83.11 (Off-Street Parking and Loading). Parking lot area shall not be counted as part of the total lot area when computing the minimum landscaped area in compliance with Table 83-12 nor shall the parking lot landscaping be counted as part of the minimum landscaping required. (4) Minimum area. Projects specified in Section 83.10.020 (Applicability) shall provide and maintain landscaped areas in compliance with Table 83-12 (Minimum Landscaped Area). No	No. The Applicant does not propose to plant landscaping throughout the AMSP/Lockhart Substation site as part of the project. The Applicant proposes to install minimal amounts of native Xeriscape landscaping outside the entrances to the control room and administrative building.

Provision	Conformity
landscaped area having a width of less than five feet shall be considered in the minimum landscaping requirement.	
83.10.070 Landscape Standards Landscaping shall be designed, installed, and maintained as provided in this Section. (a) General design standards. The design of landscaped areas shall incorporate the following features: (1) Coordinated planting design. Planting design shall coordinate new plant materials and their growth requirements with the climate, soil, orientation, water courses, existing vegetation, fire prevention needs, related natural resources and man-made facilities. Landscaping shall be an integral part of the overall Project design and not simply located in excess space after parking areas and structures have been planned. (2) Minimal maintenance intensive landscaping. Maintenance intensive landscaping shall be minimal and shall be located near primary use areas. (3) Plants and materials. Landscaping may include lawn, ground cover, trees, shrubs, and other live plant materials. Landscaping may also include small amounts of accessory decorative outdoor landscape elements (e.g., ponds, fountains, sculpture, and paved or decorated surfaces), excluding driveways, parking, and storage areas. (6) Screening. Landscaping shall be required to screen storage areas, trash enclosures, and parking areas (except residential driveways). Above ground public utilities, such as, but not limited to electrical substations, water storage facilities and treatment plants, shall also be provided with perimeter landscape screening to the extent possible. Freeway and state highway rights-of-way shall also be provided with landscape screening to minimize their aesthetic impacts on adjacent uses. See Section 83.02.060 (Screening and Buffering). (7) Phased development. Graded areas proposed for development in a later phase shall be planted with annual grasses and shall be maintained in a weed-free condition until development occurs, if the later phase will not begin construction within six months of completion of the previous phase.	No. The Applicant does not propose to plant landscaping throughout the AMSP/Lockhart Substation site as part of the project. The Applicant proposes to install minimal amounts of native Xeriscape landscaping outside the entrances to the control room and administrative building.

Provision	Conformity
(b) Plant materials. Plant materials shall be selected and installed to comply with the following requirements: (1) Considerations when selecting plant materials. Attention shall be given to appearance, height, spread, growth rate, moisture requirements, potential root damage, disease, pest susceptibility, climate adaptability, soil type, slope, function, and decreased maintenance. (2) Existing plant materials. Healthy, existing plant materials shall be used to meet landscape requirements wherever possible. Existing trees and plants shall be retained on site, unless otherwise approved in writing by the Director or the proper removal permit is granted in compliance with Division 6 (Plant Protection and Management). (3) Mix of plant materials. A mix of plant materials shall be provided in a variety of container sizes. The mix of plant materials shall include trees, shrubs and attractive erosion preventing ground cover. Use of one predominant species shall be avoided to prevent spread of disease. (4) Location and spacing. Plant materials shall be located in areas appropriate to their known climatic and environmental requirements and spaced to allow mature growth. Trees and shrubs shall be planted so that at maturity they do not interfere with service lines and clear sight triangles. (5) Native and drought-tolerant plant materials. Native plant materials or locally adaptable drought-tolerant plantings capable of surviving the prevailing climatic and soil conditions with a minimum of supplemental water shall be emphasized. (6) Trees. Trees planted near public sidewalks or curbs shall be of a species and installed in a manner that prevents physical damage to sidewalks, curbs, gutters, and other public improvements. Trees shall be planted in areas of public view adjacent to structures, either individually or in grove effect, at the equivalent of one tree per 30 linear feet of building area. Additional trees shall be provided in compliance with Table 83-13 (Minimum Landscape	

Provision	Conformity
Requirements). (7) Water requirements. At least seventy-five percent of the plants selected in non-turf areas shall be well suited to the climate of the region and require minimal water once established in the landscape. Plants that require similar water needs shall be grouped together and shall be irrigated separately. (8) Mulch. In order to reduce evaporation, competition for water, weed growth and damage to trees and shrubs, a minimum of three inches of mulch shall be added in non-turf areas to the soil surface after planting and within 18 inches of tree trunks. Plant types and landscaping applications that are intolerant to or inappropriate for mulch shall be excluded from this requirement. (9) Non-plant groundcover materials. Gravel, colored rock, bark and other similar materials shall not be used as a sole groundcover material. These materials may be used, however, in place of paving materials in functional activity areas (e.g., patios, rear entry walks, etc.) or as non-plant groundcover for up to 20 percent of the total landscaped area. (c) Required quantities of plant material. The minimum quantity of trees, shrubs, and groundcover shall be as follows: (1) General landscaping. For general landscaping, the specifications listed in Table 83-13 (Minimum Quantities of Plant Materials) shall apply. Additional quantities may be required for boundary landscaping, interior parking landscaping [see Section 83.11.080(I)], screening, and slope stabilization. (2) Slope stabilization. In addition to general landscaping, slopes shall be protected from erosion by suitable ground cover that includes a combination of drought tolerant plants and hardscape components. Decorative rock, boulders or other suitable hardscape material may be utilized, but live plant materials shall comprise the dominant visual character. Trees and shrubs may be used as a part of slope landscaping where appropriate. Slope areas shall not be included in the overall required area of a site to be landscaped, and slope landscaping shall not be included in the overall landscape requirements.	

Provision	Conformity
(e) Irrigation. Except where Xeriscaping is specifically designed and intended not to be irrigated, landscaped areas shall be provided with a permanent automatic irrigation system(s) coordinated to meet the needs of various planting areas.	
83.10.080 Regional Landscaping Requirements (c) Desert Region. In the Desert Region the following additional landscaping standards shall apply: (1) Existing desert native plants, or any part thereof except the fruit, shall not be removed without a removal permit issued in compliance with Division 6 (Plant Protection and Management). In addition, replacement of desert native plants shall be in compliance with Division 6 (Plant Protection and Management), except as provided for in this Subsection. (A) Recommended plant materials include, but are not limited to, native, succulent, drought- and infestation-tolerant deciduous and evergreen varieties. The use of turf shall be minimized. A list of recommended plant materials for the Desert Region is available at the Department to assist developers in preparing their landscaping plans. (B) Joshua trees shall be relocated on site, unless otherwise specifically allowed in writing by the Director. (2) A minimum of 15 feet of the front yard and street side yard setback areas of a parcel shall be landscaped using Xeriscape type landscaping and hardscape materials in any combination. For sites where no disturbance of land within setbacks is proposed, landscaping shall not be required. (3) Unpaved parking lots shall not be required to be landscaped. Only those parking lots required to be paved shall be landscaped in compliance in Section 83.11.080 (Landscape Requirements for Parking Areas).	No. The Applicant does not propose to plant landscaping throughout the AMSP/Lockhart Substation site as part of the project. The Applicant proposes to install minimal amounts of native Xeriscape landscaping outside the entrances to the control room and administrative building.
83.13 Sign Regulations **83.13.020 Applicability** The sign standards provided in this Chapter shall apply to signs in all land use zoning districts in the County. Only signs authorized by this Chapter shall	Yes. The Applicant would comply with the sign regulations and provisions of the County's Development Code. The Applicant may desire to install a freestanding onsite sign at the perimeter of the site.

Provision	Conformity
be allowed in that land use zoning district, unless otherwise expressly provided in this Chapter.	
83.13.030 Sign Permits and Exemptions (a) Sign permits and registration. A person shall not erect a sign regulated by this Chapter without first obtaining appropriate permits from the Building Division and registration with the Code Enforcement Division. Signs shall be erected in compliance with the provisions of this Development Code and applicable specific plans. (c) Exempt signs. The following signs shall be exempt from the requirements of this Development Code and applicable specific plans: (4) Utility company signs identifying conduits, cables, dangerous conditions, or providing other notices of this type.	Yes. As noted in Development Code 83.13.030, utility companies are exempt from the requirement for a sign permit.

Table H-3: Conformity of Mojave Solar Project with the San Bernardino County Ordinance 3900

Provision	Conformity
87.0921 Glare and Outdoor Lighting – Mountain and Desert Areas. (a) The intent of this section is: to encourage effective, non-detrimental lighting; to maintain night-time safety, utility, security and productivity; and to encourage lighting practices and systems which will minimize light pollution, glare and light trespass, conserve energy and resources and curtail the degradation of the night time visual environment.	Yes. The AMSP/Lockhart Substation would comply with Ordinance 3900 by design of light fixtures and placement of light sources. The AMSP/Lockhart Substation would have directional lighting, lenses, and shields to minimize light trespass, light spill, and sky glow.

APPENDIX I

AIR QUALITY

PROJECT DESCRIPTION

The proposed AMS project is a solar electric generating facility totaling 250 MW located on approximately 1,765 acres. The project consists of two separate 125 MW power units, identified as Alpha (northwest) and Beta (southwest). The project would utilize a 21.5 million Btu/hr natural gas-fueled auxiliary heat transfer fluid (HTF) heater on each power unit to reduce startup time and to keep the temperature of the HTF above its freezing point (54 °F).

The proposed solar energy facility would use a 6 cell wet cooling tower for power plant cooling on each power unit. Water would be supplied from onsite groundwater wells, and would be treated as necessary for cooling tower and other onsite uses. The project would also have several other operating emission sources including: 1) HTF expansion vessels and HTF overflow tanks at each power unit with vent emission control systems; 2) an HTF piping system for each power unit; 3) two diesel-fueled 346 horsepower firewater pump engines for fire protection; 4) two diesel-fueled 4,160 horsepower emergency generators; 5) a contaminated soil bio-remediation area; 6) on-site mobile equipment needed for site maintenance (mirror washing) and operation; and 7) offsite vehicle emissions associated with truck hauling of raw materials (fuel and water treatment chemicals) and waste water evaporation pond solids, and employee commute trips.

The applicant is currently proposing the use of groundwater from wells to be constructed onsite to supply plant site raw water needs. Therefore, no offsite water pipelines are proposed to be constructed. Additionally process wastewater would be kept onsite in evaporation ponds and sanitary wastewater would be sent to an onsite sanitary waste septic system, so no offsite industrial waste water or sewer pipelines are proposed to be constructed.

The project also proposes an electrical interconnection to Southern California Edison's (SCE's) transmission system. SCE has proposed significant system-wide upgrades to the transmission system. The onsite transmission line construction would include a new 230KV Hinkley substation and transmission gen-tie lines (11,460 feet for Alpha and 4,430 for Beta). Therefore, no offsite transmission line construction is required to interconnect the project.

The project would connect with an existing Southwest Gas Corporation natural gas pipeline that is located adjacent to the Alpha power unit. Therefore, no offsite gas pipeline construction is required for this project.

PROJECT CONSTRUCTION

The total duration of project construction for AMS is estimated to be approximately 26 months. Different areas within the project site and the construction laydown areas would be disturbed at different times over the construction period. Total construction disturbance area would be approximately 1,765 acres. The maximum acreage disturbed on any one day during construction is estimated by the applicant to be 200 acres. Combustion emissions would result from the off-road construction equipment, including diesel construction equipment used for site grading, excavation, and construction of onsite structures, and water and soil binder spray trucks used to control construction

dust emissions. Fuel combustion emissions also would result from exhaust from on-road construction vehicles, including heavy duty diesel trucks used to deliver materials, other diesel trucks used during construction, and worker personal vehicles and pickup trucks used to transport workers to and from and around the construction site. Fugitive dust emissions would result from site grading/excavation activities, installation of new onsite transmission lines, water and gas pipelines, construction of power plant facilities, roads, and substations, and vehicle travel on paved/unpaved roads.

The applicant's maximum daily and average annual emission estimates, that include the applicant's fugitive dust mitigation assumptions and fleet average off-road equipment emission factors, are provided below in **Air Quality Tables 6** and **7**.

Air Quality Table 6
AMS Construction - Maximum Daily Emissions [a]

	NOx	SOx	CO	VOC	PM10	PM2.5
Onsite Construction Emissions						
Onsite Construction Equipment	583.1	0.6	310.9	97.3	25.9	25.7
Fugitive dust	--	--	--	--	145.4	30.5
Subtotal of Onsite Emissions	583.1	0.6	310.9	97.3	171.3	56.2
Offsite Construction Emissions						
Paved Road Dust	--	--	--	--	10.2	0.3
Track-out Dust	--	--	--	--	5.9	1.0
Delivery/Hauling Exhaust	97.5	0.1	29.5	7.1	4.4	4.4
Worker Travel Exhaust	54.4	0.5	469.5	39.6	3.8	3.8

Source: AS 2009a, ESH 2009c, ESH 2010e, ESH 2010g
[a] - The maximum daily emissions do not always occur on the same day for each pollutant or occur concurrently for the separate construction activities.

Air Quality Table 7
AMS Construction – Average Annual Emissions (tons/year)

	NOx	SOx	CO	VOC	PM10	PM2.5
Onsite Construction Emissions						
Onsite Construction Equipment	68.9	0.1	34.7	11.0	4.0	4.0
Fugitive dust	--	--	--	--	12.8	2.7
Subtotal of Onsite Emissions	68.9	0.1	34.7	11.0	16.8	6.7
Offsite Emissions						
Paved Road Dust	--	--	--	--	1.2	0.0
Track-out Dust	--	--	--	--	0.7	0.1
Delivery/Hauling Exhaust	12.5	0.0	3.8	0.9	0.57	0.56
Worker Travel Exhaust	7.2	0.1	60.8	5.2	0.46	0.46

Source: AS 2009a, ESH 2009c, ESH 2010e, ESH 2010g

The emissions presented in **Air Quality Table 7** represents annual values averaged over the 26 month construction period and not maximum annual emissions. The applicant submitted revised construction emission estimates on February 2nd. Staff's review of these emission estimates indicated that: 1) the fugitive dust emission estimate procedure was oversimplified and not conservative; 2) trip length estimates were not realistic and did not match other information provided in the AFC; and 3) that dated emission factors were used for both the on-road and off-road equipment. Staff performed a separate corrected emission estimate. The results of staff's corrected emission estimate are provided in **Air Quality Table 8**. The purpose of this revised emission analysis is primarily to confirm that the project does not trigger a General Conformity analysis and for staff to obtain a better understanding of the construction elements and their potential for near-field nuisance impacts to residents located on or near the project fence line.

Air Quality Table 8
AMS Construction – Staff Emission Estimate

	NOx	SOx	CO	VOC	PM10	PM2.5
Maximum Daily Emissions (lb/day) [a]						
Onsite Construction Equipment	598.4	0.6	841.0	240.4	31.2	29.6
Onsite Fugitive dust	---	---	---	---	1,102.0	211.4
Subtotal of Onsite Emissions	**598.4**	**0.6**	**841.0**	**240.4**	**1,133.2**	**240.0**
Offsite Vehicle Emissions	135.9	0.7	475.5	53.3	7.8	6.8
Offsite Fugitive Dust Emissions	---	---	---	---	29.9	0.0
Subtotal of Offsite Emissions	**135.9**	**0.7**	**475.5**	**53.3**	**37.7**	**6.8**
Maximum Daily Total	**734.4**	**1.3**	**1,316.6**	**293.7**	**1,170.9**	**247.8**
Maximum Annual Emissions (tons/year) [b]						
Onsite Construction Equipment	47.5	0.0	61.8	19.2	2.8	2.6
Onsite Fugitive dust	---	---	---	---	78.7	14.9
Subtotal of Onsite Emissions	**47.5**	**0.0**	**61.8**	**19.2**	**81.4**	**17.5**
Offsite Vehicle Emissions	17.2	0.1	75.1	7.7	1.1	0.8
Offsite Fugitive Dust Emissions	---	---	---	---	3.9	0.0
Subtotal of Offsite Emissions	**17.2**	**0.1**	**75.1**	**7.7**	**4.9**	**0.8**
Maximum Daily Total	**64.7**	**0.2**	**136.9**	**26.9**	**86.3**	**18.3**

Source: Staff Analysis (CEC 2010o)
[a] - Maximum daily and monthly emissions for all criteria would occur during Month 6, except PM10 which would have its peak emissions during Month 5.
[b] – Maximum annual emissions (worst-case consecutive twelve month period for onsite and offsite emissions) do not occur during the same periods for all pollutants: for PM10 and PM2.5 the peak occurs during months 1 to 12; for NOx the peak occurs during months 2 through 13; for VOC the peak occurs during months 4 through 15; for CO the peak occurs during months 6 through 17; and for SOx the peak occurs during months 10 through 21 of the 26 month construction schedule.

Staff's construction emission estimate is fairly close to the applicant's emission estimate for certain activities and pollutants. The major divergence is in the particulate emission estimates, where staff believes that the applicant did not use an estimation technique appropriate to the complexity of the construction required for this project. However, staff's major finding from this analysis is that the worst-case annual construction

emissions would not trigger a General Conformity analysis for the project. Staff's emission calculations, in Adobe Acrobat File format, have been docketed separately from the Supplemental Staff Assessment (SSA)[5].

PROJECT OPERATION

The AMS facility would be a nominal 250 Megawatt (MW) parabolic solar trough thermal solar electrical generating facility (AS 2009a). The direct air pollutant emissions from power generation are minimal; however, there are required auxiliary equipment and maintenance activities necessary to operate and maintain the facility. The facility includes two 125 MW power blocks with identical stationary operating equipment, with one noted exception, and maintenance activity requirements.

The AMS onsite stationary and mobile emission sources are as follows:

- Two 21.5 MMBtu natural gas-fueled auxiliary HTF heaters, one per power block, used to maintain the temperature of the HTF above freezing during cold months and pre-warming for daily startup year-round;
- Two 6-cell wet-cooling towers, one per power block, each to provide cooling and heat rejection from a single power block process;
- Two 346-hp diesel-fired emergency fire water pump engines, one per power block;
- Two 4,160-hp diesel engine-driven emergency generators, one per power block;
- One 2,000 gallon gasoline tank and one 2,000 gallon diesel tank that would refuel onsite dedicated vehicles for both power blocks;
- Eight HTF expansion vessels and two HTF overflow tanks on each power block, that would be serviced by HTF venting control systems;
- Two separate HTF piping systems for each power block with a total facility component count of 3,247 valves, 8,120 flanges/connectors[6], 24 pump seals, and 16 pressure relief valves.
- Spent HTF waste loadout;
- Two bio-remediation/ land farm units, one per power block, to treat HTF contaminated soils; and
- Onsite diesel and gasoline fueled maintenance vehicles used for mirror washing and other maintenance/operation support activities.

The emissions from the spent HTF waste loadout, bioremediation/land farm units, and diesel tanks are negligible, they do not require permitting by the MDAQMD, and are not included in the VOC emission estimates for the facility or discussed further in this section.

[5] The Excel file format for these calculations can be provided to parties upon request.

[6] Staff increased the number of flanges/connectors to a value of 4,060 per unit to be consistent with the component count ratios of other currently analyzed projects using HTF piping systems. This revision has a very minor effect on the emission estimate for the HTF piping system.

The applicant[7] provided both onsite and offsite emission estimates using the following assumptions to develop the hourly, daily, and annual onsite emissions estimates for AMS operation:

A. Maximum Hourly Emissions

- Both auxiliary HTF heaters, the cooling towers, one emergency generator engine, the HTF vent, and the HTF piping system all operate for the full hour.
- The gasoline tank has a 1,000 gallon loading event.
- The onsite diesel vehicles (SCA cleaning truck, evacuation truck, etc) and gasoline vehicles (stakebed truck, ranger truck, welding truck, etc) hourly emissions are based on the annual emissions divided by 8,760 hours per year.

B. Maximum Daily Emissions

- Both auxiliary HTF heaters operate for 24 hours.
- Both cooling towers operate for 16 hours.
- The emergency generator engines operate for a total of one hour.
- The HTF vent system operates for eight hours.
- The HTF piping system fugitive emissions have been recalculated by staff, consistent with the procedures developed by Kern County Air Pollution Control District that consider the properties of the HTF during the daily operation cycle, where it is assumed that for 16 hours per day the HTF in the piping system is consistent with the properties of a light liquid and for 8 hours per day the HTF in the piping system is consistent with the properties of a heavy liquid. The specific emission factors used are as follows:

Piping Component	Light Liquid Emission Factor (lb/hr/source)	U.S.EPA Reference Table	Heavy Liquid Emission Factor (lb/hr/source)	U.S.EPA Reference Table
Valves	5.55E-04	Table 2-9 (100 ppm)	1.90E-05	Table 2-4 (Heavy Oil)
Pump Seals	1.86E-03	Table 2-9 (100 ppm)	5.30E-05	Table 2-12 (Zero Factor)
Flanges/Connectors	1.65E-05	Table 2-12 (Zero Factor)	1.65E-05	Table 2-12 (Zero Factor)
Pressure Relief Valves	9.85E-02	Table 2-5 (<10,000 ppm)	1.90E-05	Table 2-4 (Heavy Oil)

Source: USEPA 1995.
Note: for pressure relief valves the in service emission factors are for gas service, rather than light liquid service.

These emission factors may not assume appropriate control efficiencies for the inspection and maintenance program required by MDAQMD. Staff will update this emission estimate, if necessary, after further consideration of the effectiveness of the inspection and maintenance program.

- The gasoline tank has a 1,000 gallon loading event and 200 gallons of vehicle refueling.

[7] Assumptions regarding the gasoline tank emissions have been updated by staff to reflect both maximum emission events per hour and per day and also reflect that the gasoline tank will be required to have both Phase I and Phase II vapor balance controls.

- The onsite diesel vehicles (SCA cleaning truck, evacuation truck, etc) and gasoline vehicles (stakebed truck, ranger truck, welding truck, etc) hourly emissions are based on the annual emissions divided by 365 days per year.

C. Maximum Annual Emissions

- Both auxiliary HTF heaters operate for 4,380 hours per year.
- Both cooling towers operate for 5,840 hours per year.
- The emergency fire pump engines and emergency generator engines operate for 50 hours per year each[8].
- The HTF vent system operates for 2,920 hours per year.
- The HTF piping system daily fugitive emissions multiplied by 365 days per year.
- The gasoline tank has an annual throughput of 18,000 gallons.
- The diesel vehicles (SCA cleaning truck, evacuation truck, etc) and gasoline vehicles (stakebed truck, ranger truck, welding truck, etc) emissions are based on a total annual vehicle miles traveled (VMT) of 40,000 and 102,040, respectively.

The AMS onsite stationary source and mobile equipment emissions, including fugitive PM10 emissions, for the entire facility are estimated and summarized in **Air Quality Table 9**.

[8] This basis is updated from the applicant's assumption of 52 hours based on a regulatory limit of 50 hours for engine testing and maintenance operation.

Air Quality Table 9
AMS Operation - Maximum Hourly, Daily, and Annual Onsite Emissions

	Maximum Hourly Emissions (lbs/hr)					
Emission Source	**NOx**	**SOx**	**CO**	**VOC**	**PM10**	**PM2.5**
Auxiliary HTF Heaters	0.47	0.03	1.63	0.46	0.32	0.32
Cooling Towers	--	--	--	--	4.48	4.48
Emergency Fire Pump Engines	0.00	0.00	0.00	0.00	0.00	0.00
Emergency Generator Engines	46.61	0.04	3.78	0.92	0.33	0.33
HTF Expansion Tanks/Venting Systems	--	--	--	1.14	--	--
HTF Piping Systems	--	--	--	3.56	--	--
Gasoline Storage Tank	--	--	--	0.42	--	--
Maintenance Vehicles (all types)	0.38	0.00	0.23	0.07	0.03	0.03
Operations Fugitive Dust	--	--	--	--	4.25	0.90
Total Maximum Hourly Emissions	47.46	0.07	5.64	6.57	9.41	6.06
Emission Source	**Maximum Daily Emissions (lbs/day)**					
Auxiliary HTF Heaters	11.36	0.60	39.22	11.08	7.65	7.65
Cooling Towers	--	--	--	--	71.74	71.74
Emergency Fire Pump Engines	0.00	0.00	0.00	0.00	0.00	0.00
Emergency Generator Engines	46.61	0.04	3.78	0.92	0.33	0.33
HTF Expansion Tanks/Venting Systems	--	--	--	9.10	--	--
HTF Piping Systems	--	--	--	58.51	--	--
Gasoline Storage Tank	--	--	--	0.63	--	--
Maintenance Vehicles (all types)	9.21	0.02	5.49	1.65	0.61	0.61
Operations Fugitive Dust	--	--	--	--	102.10	21.70
Total Maximum Daily Emissions	67.18	0.66	48.49	81.89	182.43	102.03
Emission Source	**Annual Emissions (tons/year)**					
Auxiliary HTF Heaters	0.52	0.03	1.79	0.51	0.35	0.35
Cooling Towers	--	--	--	--	13.09	13.09
Emergency Fire Pump Engines	0.11	0.00	0.10	0.01	0.01	0.01
Emergency Generator Engines	2.33	0.00	0.19	0.05	0.02	0.02
HTF Expansion Tanks/Venting Systems	--	--	--	1.66	--	--
HTF Piping Systems	--	--	--	10.68	--	--
Gasoline Storage Tank	--	--	--	0.01	--	--
Maintenance Vehicles (all types)	1.68	0.00	1.00	0.30	0.11	0.11
Operations Fugitive Dust	--	--	--	--	18.63	3.96
Total Annual Emissions	4.64	0.03	3.08	13.22	32.21	17.54

Source: AS 2009a, ESH 2009c, ESH 2010e, ESH 2010g, ESH 2010k, and Staff Analysis.

In addition to the onsite stationary and mobile emission sources there are offsite deliveries (fuel, water treatment chemicals, periodic evaporation pond solids waste haul trips, etc.) and daily employee trips. The following assumptions were used by the applicant to develop daily and annual offsite mobile source emissions estimates for AMS operation:

A. Maximum Daily Emissions

- For delivery vehicles the daily emission were based on the annual emissions divided by 260 (deliveries occur on weekdays).
- For employee commuting the daily emissions were based on the annual emissions divided by 365 days per year (employees work every day).

B. Maximum Annual Emissions

- 12,540 gasoline delivery vehicle VMT (medium duty gasoline vehicles size was assumed).
- 12,540 diesel delivery vehicle VMT (heavy duty diesel trucks were assumed).
- 1,241,000 employee commuting VMT based on an average of 68 commuting employees per day, 365 days per year, with a 50 mile round trip commute distance.

The AMS offsite mobile source emissions estimated by the applicant, including fugitive PM10 emissions, are summarized in **Air Quality Table 10**.

Air Quality Table 10
AMS Operation - Applicant Calculated Maximum
Daily and Annual Offsite Emissions

	Maximum Daily Emissions (lbs/day)					
Emission Source	**NOx**	**SOx**	**CO**	**VOC**	**PM10**	**PM2.5**
Diesel Delivery Vehicles	1.65	0.00	0.46	0.12	0.08	0.07
Gasoline Delivery Vehicles	0.1	0.00	0.63	0.05	0.00	0.00
Employee Vehicles	3.77	0.03	37.67	3.13	0.31	0.30
Total Maximum Daily Emissions	5.52	0.03	38.76	3.30	0.39	0.37
Emission Source	**Annual Emissions (tons/year)**					
Diesel Delivery Vehicles	0.21	0.00	0.06	0.02	0.01	0.01
Gasoline Delivery Vehicles	0.01	0.00	0.08	0.01	0.00	0.00
Employee Vehicles	0.69	0.01	6.88	0.57	0.06	0.06
Total Annual Emissions	0.91	0.01	7.02	0.60	0.07	0.07

Source: AS 2009a, ESH 2009c, ESH 2010e, ESH 2010g

Staff does not believe that the applicant's emission estimate assumptions for trip length or daily emissions are reasonable, nor did the applicant include fugitive road dust emissions in the offsite emissions estimate. Therefore, staff provided a revised set of assumptions and emission calculations, using emission factors from a more recent version of the ARB EMFAC model, which have been docketed separately (CEC 2010o). The results of Staff's offsite emission calculations are shown in **Air Quality Table 11**.

Air Quality Table 11
AMS Operation – Staff Calculated Maximum Daily and Annual Offsite Emissions

	Maximum Daily Emissions (lbs/day)					
Emission Source	**NOx**	**SOx**	**CO**	**VOC**	**PM10**	**PM2.5**
Delivery Vehicles	13.71	0.02	4.66	1.13	0.67	0.57
Employee Vehicles	4.16	0.06	41.42	4.35	0.53	0.34
Fugitive Dust	--	--	--	--	5.38	0
Total Maximum Daily Emissions	17.87	0.08	46.08	5.49	6.58	0.91
Emission Source	**Annual Emissions (tons/year)**					
Delivery Vehicles	0.63	0.00	0.21	0.05	0.03	0.03
Employee Vehicles	0.71	0.01	7.04	0.74	0.09	0.06
Fugitive Dust	--	--	--	--	0.86	0
Total Annual Emissions	1.33	0.01	7.25	0.79	0.98	0.08

Source: Staff Analysis (CEC 2010o) of vehicle trip data provided in ESH 2010g

The emissions presented in **Air Quality Table 11** are representative of 2013 fleet average vehicle emission factors. The offsite emissions during operation, with the exception of fugitive dust emissions, will go down over time as employee vehicles and delivery trucks are replaced with newer lower emitting models. Staff's emission calculations, in Adobe Acrobat File format, have been docketed separately from the SSA[9].

PROJECT CONSTRUCTION AND OPERATION OVERLAP

The Alpha and Beta Units may be developed in phases. Although there could be some overlap of construction and commercial operation, staff does not anticipate this overlap to be the maximum worst case scenario. Construction emissions are considerably higher than operating emissions and the maximum construction emissions occur early in the overall construction process (first six months), so any overlap after the maximum construction period is assumed not to create a new maximum emissions scenario. Therefore, staff concludes that the overlapping emissions and impacts during this overlapping period would be no worse than the worst-case construction impacts and has not performed any additional impact assessment of the construction/operation overlapping period.

INITIAL COMMISSIONING AND CLOSURE

Initial commissioning refers to a period prior to beginning commercial operation when the equipment undergoes initial tests. Because of this proposed project's use of a non-fuel fired generating technology, staff does not expect major changes in emissions from the facility commissioning activities compared to that of normal operation.

Closure and decommissioning, as a one-time limited duration event, would have emissions that are similar in type and magnitude, but likely lower than, the construction emissions as discussed above.

[9] The Excel file format for these calculations can be provided to parties upon request.

Construction Emissions Summary Tables

Parameter Onsite Construction Emissions	Units	NOx	CO	VOC	SOX	PM10	PM2.5	CO_2[(2)]
Fugitive Dust-Phase I	Lbs/day	-	-	-	-	145.4	30.5	-
	Tons/Period	-	-	-	-	9.34	1.96	-
Fugitive Dust-Phase II	Lbs/day	-	-	-	-	2.9	0.6	-
	Tons/Period	-	-	-	-	0.6	0.1	-
Fugitive Dust-Phase III	Lbs/day	-	-	-	-	11.5	2.4	-
	Tons/Period	-	-	-	-	2.8	0.6	-
Fugitive Dust-Phase IV	Lbs/day	-	-	-	-	57.6	12.1	-
	Tons/Period	-	-	-	-	15.1	3.2	-
Equipment Exhaust-Phase I	Lbs/day	583.1	197.9	66.2	0.57	25.89	25.66	-
	Tons/Period	38.5	13.1	4.4	0.04	1.71	1.69	5706
Equipment Exhaust-Phase II	Lbs/day	14.8	6.3	1.8	0.018	0.68	0.68	-
	Tons/Period	3.2	1.4	0.4	0.004	0.15	0.15	1060
Equipment Exhaust-Phase III	Lbs/day	138.1	83.2	26.8	0.16	8.69	8.61	-
	Tons/Period	36.4	22.0	7.1	0.04	2.29	2.27	8988
Equipment Exhaust-Phase IV	Lbs/day	249.1	135.2	41.6	0.26	15.71	15.57	-
	Tons/Period	71.2	38.7	11.9	0.07	4.49	4.45	16638
Offsite Construction Emissions	Units							
Paved Road Dust	Lbs/day	-	-	-	-	10.19	0.27	-
	Tons/Period	-	-	-	-	2.61	0.07	-
Track-out Dust	Lbs/day	-	-	-	-	5.88	0.993	-
	Tons/Period	-	-	-	-	1.5	0.254	-
Delivery/Hauling Exhaust	Lbs/day	97.5	29.5	7.1	0.12	4.43	4.39	-
	Tons/Period	27	8.2	1.96	0.032	1.23	1.22	3259
Worker Travel-Exhaust (bused and non-bused)	Lbs/day	54.4	469.5	39.6	0.47	3.79	3.78	-
	Tons/Period	15.6	131.7	11.2	0.12	1.0	1.0	11324

Notes:

1. Daily maximum emissions for equipment exhaust can be found on Table C.5-5. Daily average emissions are presented here as they represent site activity and emissions levels over the course of the project.
2. CO2e emissions are calculated and totaled on Table C.5-5. CO2e emissions for the construction period are ~ 43,015 metric tons.

Based upon the applicant's best estimate, the maximum daily onsite emissions will be as follows:

1. Fugitive dust emissions will be the greatest during the Phase I grading and site preparation period.
2. Exhaust emissions will peak during Phases II-IV (month 15 or 16).

Estimated Maximum Daily Onsite Emissions (lbs/day)

Phase	Category	NOx	CO	VOC	SOx	PM10	PM2.5
I	Fugitive Dust	-	-	-	-	145.4	30.5
	Exhaust	583	198	66.2	0.57	25.9	25.7
Total Phase I		*583*	*198*	*66.2*	*0.57*	*171.3*	*56.2*
II-IV	Fugitive Dust	-	-	-	-	72.0	15.1
	Exhaust	556	311	70.2	0.60	34.6	34.2
Total Phases II-IV		*556*	*311*	*70.2*	*0.60*	*106.6*	*49.3*

Estimated onsite emissions in terms of tons per year (tons per period normalized based on a period of 26 months, 2.167 yrs).

	NOx	CO	VOC	SOx	PM10	PM2.5	CO2
Tons/Period	149.3	75.2	23.8	0.15	36.4	14.5	32392
Tons/Yr	68.9	34.7	11.0	0.07	16.8	6.66	14948

All construction emissions (onsite and offsite) in terms of tons per year are compared to the applicable conformity threshold levels in the table below (including fugitive dust and exhaust based emissions).

	NOx	CO	VOC	SOx	PM10	PM2.5	CO2e
Construction Emissions, tpy	88.6	99.3	17.1	0.14	19.8	7.85	21677
Conformity Threshold, tpy	100[1]	na	50/100[2]	na	70	na	na
Conformity Analysis Required	No	No	No	No	No	No	na

1 The site is located in the portion of San Bernardino County that lies within the "moderate" ozone NA area. As such, the applicable conformity threshold for NOx for NA areas in or outside of an ozone transport area is 100 tpy.
2 The site is located in the portion of San Bernardino County that lies within the "moderate" ozone NA area. As such the applicable conformity threshold for VOC for NA areas outside of an ozone transport area is 100 tpy, and for areas inside an ozone transport area the VOC threshold is 50 tpy.
3 The site region is attainment for CO, SOx, and NO2, therefore no conformity thresholds apply.

Operational Emissions Summary Tables

HTF Auxiliary Heaters (2 units)

	NOx	CO	VOC	SOx	PM10	PM2.5	CO2e
Lbs/hr	0.473	1.63	0.461	0.0252	0.319	0.319	-
Lbs/day	11.4	39.2	11.1	0.604	7.65	7.65	-
Tons/Yr	0.518	1.79	0.505	0.0276	0.349	0.349	11000

Cooling Towers (2 units)

	NOx	CO	VOC	SOx	PM10	PM2.5	CO2e
Lbs/hr	-	-	-	-	4.48	4.48	-
Lbs/day	-	-	-	-	71.74	71.74	-
Tons/Yr	-	-	-	-	13.09	13.09	-

HTF Venting/Control System (2 Systems)

	NOx	CO	VOC	SOx	PM10	PM2.5	CO2e
Lbs/hr	-	-	1.138	-	-	-	-
Lbs/day	-	-	9.1	-	-	-	-
Tons/Yr	-	-	1.66	-	-	-	-

HTF Component Fugitives (2 Solar Fields)

	NOx	CO	VOC	SOx	PM10	PM2.5	CO2e
Lbs/hr	-	-	2.44	-	-	-	-
Lbs/day	-	-	26.42	-	-	-	-
Tons/Yr	-	-	4.82	-	-	-	-

HTF Waste Load-out Fugitives

	NOx	CO	VOC	SOx	PM10	PM2.5	CO2e
Lbs/hr	-	-	0.0013	-	-	-	-
Lbs/day	-	-	0.0013	-	-	-	-
Tons/Yr	-	-	0.0000078	-	-	-	-

Emergency Fire Pump Systems (2 units)

	NOx	CO	VOC	SOx	PM10	PM2.5	CO2e
Lbs/hr	4.27	3.96	0.30	0.0031	0.23	0.23	-
Lbs/day	4.27	3.96	0.30	0.0031	0.23	0.23	-
Tons/Yr	0.11	0.10	0.01	0.0001	0.006	0.006	8.9

(1) These engines do not run in the same hour or on the same day for purposes of readiness testing.

Emergency Electrical Generators (2 units)

	NOx	CO	VOC	SOx	PM10	PM2.5	CO2e
Lbs/hr	93.21	7.57	1.85	0.07	0.66	0.66	-
Lbs/day	93.21	7.57	1.85	0.07	0.66	0.66	-
Tons/Yr	2.42	0.20	0.05	0.002	0.017	0.017	202

(1) These engines do not run in the same hour or on the same day for purposes of readiness testing.

Diesel Storage Tank (1 unit)

	NOx	CO	VOC	SOx	PM10	PM2.5	CO2e
Lbs/hr	-	-	0.0005	-	-	-	-
Lbs/day	-	-	0.0108	-	-	-	-
Tons/Yr	-	-	0.002	-	-	-	-

Gasoline Storage Tank (1 unit)

	NOx	CO	VOC	SOx	PM10	PM2.5	CO2e
Lbs/hr	-	-	0.027	-	-	-	-
Lbs/day	-	-	0.64	-	-	-	-
Tons/Yr	-	-	0.117	-	-	-	-

Onsite Operations Vehicles

	NOx	CO	VOC	SOx	PM10	PM2.5	CO2e
Lbs/hr	0.384	0.229	0.069	0.00068	0.0256	0.0256	-
Lbs/day	9.21	5.485	1.65	0.0164	0.614	0.614	-
Tons/Yr	1.68	1.0	0.301	0.003	0.112	0.112	131.92

(1) Daily values are the annual values converted to lbs and divided by 365.
(2) Hourly values are the daily values divided by 24.

Operations Fugitive Dust

	NOx	CO	VOC	SOx	PM10	PM2.5	CO2e
Lbs/hr	-	-	-	-	4.25	0.90	-
Lbs/day	-	-	-	-	102.1	21.7	-
Tons/Yr	-	-	-	-	18.6	4.0	-

(1) Hourly values are daily values divided by 24.

Maximum Operational Emissions for Purposes of NSR Applicability and Offset Mitigation

	NOx	CO	VOC	SOx	PM10	PM2.5	CO2e
Lbs/hr	47.1	5.42	5.0	0.06	5.13	5.13	-
Lbs/day	58.0	43.0	48.2	0.64	79.7	79.7	-
Tons/Yr	3.1	2.1	7.2	0.03	13.5	13.5	11211
MDAQMD Offset Thresholds Tons/yr	25	100	25	25	15	na	na
Offsets Required	No	No	No	No	No	No	na
Conformity Threshold, tpy[4]	100	na	50/100	na	70	na	na
Conformity Analysis Required	No	No	No	No	No	No	na

Notes:

1. The IC engines (generators and fire pumps) will not be run during the same hour or the same day.
2. Fugitive dust from operations is not included per MDAQMD NSR rule.
3. Operations vehicle emissions are not included per the MDAQMD NSR rule.
4. The site is located in the portion of San Bernardino County that lies within the "moderate" ozone NA area. As such, the applicable conformity threshold for NOx for NA areas in or outside of an ozone transport area is 100 tpy.
   The site is located in the portion of San Bernardino County that lies within the "moderate" ozone NA area. As such the applicable conformity threshold for VOC for NA areas outside of an ozone transport area is 100 tpy, and for areas inside an ozone transport area the VOC threshold is 50 tpy.
   The site region is attainment for CO, SOx, and NO2, therefore no conformity thresholds apply.

All operational emissions (including fugitive dust and vehicle based emissions) in terms of tons per year are compared to the applicable conformity threshold levels in the table below.

	NOx	CO	VOC	SOx	PM10	PM2.5	CO2e
Facility Emissions, tpy	4.73	3.1	7.47	0.033	32.17	17.57	11343
Conformity Threshold, tpy	100	na	50/100	na	70	na	na
Conformity Analysis Required	No	No	No	No	No	No	na

The site is located in the portion of San Bernardino County that lies within the "moderate" ozone NA area. As such, the applicable conformity threshold for NOx for NA areas in or outside of an ozone transport area is 100 tpy.
The site is located in the portion of San Bernardino County that lies within the "moderate" ozone NA area. As such the applicable conformity threshold for VOC for NA areas outside of an ozone transport area is 100 tpy, and for areas inside an ozone transport area the VOC threshold is 50 tpy.
The site region is attainment for CO, SOx, and NO2, therefore no conformity thresholds apply.

5/11/2010 01:40:15 PM

Urbemis 2007 Version 9.2.4

Combined Annual Emissions Reports (Tons/Year)

File Name: C:\Work\Projects\Abengoa Mojave Solar\For EA\Urbemis\Lockhart Substation.urb924

Project Name: Lockhart Substation

Project Location: San Bernadino County

On-Road Vehicle Emissions Based on: Version : Emfac2007 V2.3 Nov 1 2006

Off-Road Vehicle Emissions Based on: OFFROAD2007

Summary Report:

CONSTRUCTION EMISSION ESTIMATES

	ROG	NOx	CO	SO2	PM10 Dust	PM10 Exhaust	PM10	PM2.5 Dust	PM2.5 Exhaust	PM2.5	CO2
2011 TOTALS (tons/year unmitigated)	0.46	4.15	5.29	0.01	0.04	0.18	0.21	0.01	0.16	0.17	1,049.62
2012 TOTALS (tons/year unmitigated)	0.24	2.12	2.71	0.00	0.02	0.09	0.11	0.01	0.09	0.09	570.86

Construction Unmitigated Detail Report:

CONSTRUCTION EMISSION ESTIMATES Annual Tons Per Year, Unmitigated

	ROG	NOx	CO	SO2	PM10 Dust	PM10 Exhaust	PM10	PM2.5 Dust	PM2.5 Exhaust	PM2.5	CO2
2011	0.46	4.15	5.29	0.01	0.04	0.18	0.21	0.01	0.16	0.17	1,049.62
Building 01/01/2011-02/04/2011	0.04	0.39	0.50	0.00	0.00	0.02	0.02	0.00	0.02	0.02	96.46
Building Off Road Diesel	0.01	0.10	0.04	0.00	0.00	0.01	0.01	0.00	0.01	0.01	10.55
Building Vendor Trips	0.02	0.27	0.20	0.00	0.00	0.01	0.01	0.00	0.01	0.01	53.74
Building Worker Trips	0.01	0.02	0.26	0.00	0.00	0.00	0.00	0.00	0.00	0.00	32.18
Building 02/07/2011-05/13/2011	0.18	1.50	1.62	0.00	0.01	0.07	0.08	0.00	0.06	0.06	337.49
Building Off Road Diesel	0.09	0.70	0.33	0.00	0.00	0.03	0.03	0.00	0.03	0.03	96.93
Building Vendor Trips	0.06	0.76	0.55	0.00	0.01	0.03	0.04	0.00	0.03	0.03	150.47
Building Worker Trips	0.02	0.04	0.74	0.00	0.00	0.00	0.01	0.00	0.00	0.00	90.10
Building 05/16/2011-07/08/2011	0.06	0.54	0.76	0.00	0.01	0.02	0.03	0.00	0.02	0.02	148.45
Building Off Road Diesel	0.01	0.08	0.02	0.00	0.00	0.00	0.00	0.00	0.00	0.00	10.98
Building Vendor Trips	0.04	0.43	0.31	0.00	0.00	0.02	0.02	0.00	0.02	0.02	85.98

5/11/2010 01:40:15 PM

Building Worker Trips	0.01	0.02	0.42	0.00	0.00	0.00	0.00	0.00	0.00	0.00	51.48
Building 07/11/2011-11/11/2011	0.13	1.23	1.73	0.00	0.01	0.05	0.06	0.00	0.05	0.05	334.13
Building Off Road Diesel	0.02	0.20	0.07	0.00	0.00	0.01	0.01	0.00	0.01	0.01	24.83
Building Vendor Trips	0.08	0.97	0.70	0.00	0.01	0.04	0.05	0.00	0.04	0.04	193.46
Building Worker Trips	0.03	0.06	0.95	0.00	0.01	0.00	0.01	0.00	0.00	0.01	115.84
Building 11/14/2011-01/20/2012	0.05	0.49	0.67	0.00	0.00	0.02	0.02	0.00	0.02	0.02	133.09
Building Off Road Diesel	0.01	0.09	0.03	0.00	0.00	0.00	0.00	0.00	0.00	0.00	12.81
Building Vendor Trips	0.03	0.38	0.27	0.00	0.00	0.02	0.02	0.00	0.01	0.01	75.23
Building Worker Trips	0.01	0.02	0.37	0.00	0.00	0.00	0.00	0.00	0.00	0.00	45.05
2012	0.24	2.12	2.71	0.00	0.02	0.09	0.11	0.01	0.09	0.09	570.86
Building 11/14/2011-01/20/2012	0.02	0.19	0.27	0.00	0.00	0.01	0.01	0.00	0.01	0.01	57.02
Building Off Road Diesel	0.00	0.04	0.01	0.00	0.00	0.00	0.00	0.00	0.00	0.00	5.49
Building Vendor Trips	0.01	0.14	0.11	0.00	0.00	0.01	0.01	0.00	0.01	0.01	32.24
Building Worker Trips	0.00	0.01	0.15	0.00	0.00	0.00	0.00	0.00	0.00	0.00	19.29
Building 01/23/2012-03/23/2012	0.06	0.57	0.80	0.00	0.01	0.02	0.03	0.00	0.02	0.02	171.06
Building Off Road Diesel	0.01	0.11	0.04	0.00	0.00	0.00	0.00	0.00	0.00	0.00	16.47
Building Vendor Trips	0.04	0.43	0.32	0.00	0.00	0.02	0.02	0.00	0.02	0.02	96.73
Building Worker Trips	0.01	0.03	0.44	0.00	0.00	0.00	0.00	0.00	0.00	0.00	57.86
Building 03/26/2012-07/13/2012	0.10	0.89	1.38	0.00	0.01	0.04	0.05	0.00	0.03	0.04	285.81
Building Off Road Diesel	0.01	0.07	0.02	0.00	0.00	0.00	0.00	0.00	0.00	0.00	10.98
Building Vendor Trips	0.07	0.77	0.58	0.00	0.01	0.03	0.04	0.00	0.03	0.03	171.97
Building Worker Trips	0.02	0.04	0.78	0.00	0.00	0.00	0.01	0.00	0.00	0.00	102.86
Asphalt 07/16/2012-09/21/2012	0.07	0.47	0.27	0.00	0.00	0.03	0.03	0.00	0.02	0.02	56.97
Paving Off-Gas	0.00	0.00	0.00	0.00	0.00	0.00	0.00	0.00	0.00	0.00	0.00
Paving Off Road Diesel	0.06	0.46	0.22	0.00	0.00	0.03	0.03	0.00	0.02	0.02	49.40
Paving On Road Diesel	0.00	0.01	0.00	0.00	0.00	0.00	0.00	0.00	0.00	0.00	2.16
Paving Worker Trips	0.00	0.00	0.04	0.00	0.00	0.00	0.00	0.00	0.00	0.00	5.41

5/11/2010 01:40:15 PM

Phase Assumptions

Phase: Paving 7/16/2012 - 9/21/2012 - Asphalting

Acres to be Paved: 2.84

Off-Road Equipment:

1 Off Highway Tractors (267 hp) operating at a 0.65 load factor for 3 hours per day

1 Off Highway Trucks (479 hp) operating at a 0.57 load factor for 3 hours per day

1 Other Equipment (190 hp) operating at a 0.62 load factor for 4 hours per day

1 Pavers (100 hp) operating at a 0.62 load factor for 4 hours per day

1 Paving Equipment (104 hp) operating at a 0.53 load factor for 3 hours per day

2 Rollers (95 hp) operating at a 0.56 load factor for 4 hours per day

Phase: Building Construction 1/23/2012 - 3/23/2012 - Maintenance Crew Equipment Check

Off-Road Equipment:

2 Other Equipment (190 hp) operating at a 0.62 load factor for 4 hours per day

Phase: Building Construction 1/1/2011 - 2/4/2011 - Fencing

Off-Road Equipment:

1 Other Equipment (190 hp) operating at a 0.62 load factor for 2 hours per day

1 Other Material Handling Equipment (191 hp) operating at a 0.59 load factor for 4 hours per day

1 Tractors/Loaders/Backhoes (108 hp) operating at a 0.55 load factor for 8 hours per day

Phase: Building Construction 2/7/2011 - 5/13/2011 - Civil

Off-Road Equipment:

1 Bore/Drill Rigs (291 hp) operating at a 0.75 load factor for 5 hours per day

1 Cranes (399 hp) operating at a 0.43 load factor for 1 hours per day

1 Excavators (168 hp) operating at a 0.57 load factor for 4 hours per day

2 Off Highway Trucks (479 hp) operating at a 0.57 load factor for 2 hours per day

3 Skid Steer Loaders (44 hp) operating at a 0.55 load factor for 3 hours per day

2 Tractors/Loaders/Backhoes (108 hp) operating at a 0.55 load factor for 3 hours per day

1 Water Trucks (189 hp) operating at a 0.5 load factor for 3 hours per day

Phase: Building Construction 5/16/2011 - 7/8/2011 - MEER

Off-Road Equipment:

2 Other Equipment (190 hp) operating at a 0.62 load factor for 3 hours per day

5/11/2010 01:40:15 PM

Phase: Building Construction 7/11/2011 - 11/11/2011 - Electrical

Off-Road Equipment:

1 Cranes (399 hp) operating at a 0.43 load factor for 3 hours per day

1 Other Equipment (190 hp) operating at a 0.62 load factor for 3 hours per day

Phase: Building Construction 11/14/2011 - 1/20/2012 - Wiring

Off-Road Equipment:

2 Other Equipment (190 hp) operating at a 0.62 load factor for 4 hours per day

Phase: Building Construction 3/26/2012 - 7/13/2012 - Testing

Off-Road Equipment:

1 Other Equipment (190 hp) operating at a 0.62 load factor for 3 hours per day

5/11/2010 04:05:43 PM

Urbemis 2007 Version 9.2.4

Combined Annual Emissions Reports (Tons/Year)

File Name:

Project Name: Transmission Lines

Project Location: San Bernadino County

On-Road Vehicle Emissions Based on: Version : Emfac2007 V2.3 Nov 1 2006

Off-Road Vehicle Emissions Based on: OFFROAD2007

Summary Report:

CONSTRUCTION EMISSION ESTIMATES

	ROG	NOx	CO	SO2	PM10 Dust	PM10 Exhaust	PM10	PM2.5 Dust	PM2.5 Exhaust	PM2.5	CO2
2011 TOTALS (tons/year unmitigated)	0.36	3.41	2.49	0.00	2.99	0.13	3.12	0.63	0.12	0.74	612.00

Construction Unmitigated Detail Report:

CONSTRUCTION EMISSION ESTIMATES Annual Tons Per Year, Unmitigated

	ROG	NOx	CO	SO2	PM10 Dust	PM10 Exhaust	PM10	PM2.5 Dust	PM2.5 Exhaust	PM2.5	CO2
2011	0.36	3.41	2.49	0.00	2.99	0.13	3.12	0.63	0.12	0.74	612.00
Fine Grading 01/03/2011-01/06/2011	0.01	0.08	0.04	0.00	0.15	0.00	0.15	0.03	0.00	0.03	10.18
Fine Grading Dust	0.00	0.00	0.00	0.00	0.15	0.00	0.15	0.03	0.00	0.03	0.00
Fine Grading Off Road Diesel	0.01	0.08	0.03	0.00	0.00	0.00	0.00	0.00	0.00	0.00	9.69
Fine Grading On Road Diesel	0.00	0.00	0.00	0.00	0.00	0.00	0.00	0.00	0.00	0.00	0.00
Fine Grading Worker Trips	0.00	0.00	0.00	0.00	0.00	0.00	0.00	0.00	0.00	0.00	0.50
Mass Grading 01/03/2011-03/21/2011	0.03	0.26	0.12	0.00	2.03	0.01	2.04	0.42	0.01	0.43	37.46
Mass Grading Dust	0.00	0.00	0.00	0.00	2.03	0.00	2.03	0.42	0.00	0.42	0.00
Mass Grading Off Road Diesel	0.03	0.26	0.08	0.00	0.00	0.01	0.01	0.00	0.01	0.01	33.13
Mass Grading On Road Diesel	0.00	0.00	0.00	0.00	0.00	0.00	0.00	0.00	0.00	0.00	0.00
Mass Grading Worker Trips	0.00	0.00	0.04	0.00	0.00	0.00	0.00	0.00	0.00	0.00	4.33
Trenching 01/07/2011-01/19/2011	0.02	0.23	0.08	0.00	0.00	0.01	0.01	0.00	0.01	0.01	29.85
Trenching Off Road Diesel	0.02	0.23	0.07	0.00	0.00	0.01	0.01	0.00	0.01	0.01	28.87

5/11/2010 04:05:43 PM

Trenching Worker Trips	0.00	0.00	0.01	0.00	0.00	0.00	0.00	0.00	0.00	0.00	0.98
Building 01/20/2011-01/25/2011	0.01	0.08	0.10	0.00	0.00	0.00	0.00	0.00	0.00	0.00	20.37
Building Off Road Diesel	0.00	0.03	0.01	0.00	0.00	0.00	0.00	0.00	0.00	0.00	3.71
Building Vendor Trips	0.00	0.05	0.04	0.00	0.00	0.00	0.00	0.00	0.00	0.00	10.42
Building Worker Trips	0.00	0.00	0.05	0.00	0.00	0.00	0.00	0.00	0.00	0.00	6.24
Building 01/26/2011-02/18/2011	0.07	0.64	0.53	0.00	0.00	0.02	0.03	0.00	0.02	0.02	122.12
Building Off Road Diesel	0.04	0.39	0.13	0.00	0.00	0.01	0.01	0.00	0.01	0.01	47.13
Building Vendor Trips	0.02	0.24	0.17	0.00	0.00	0.01	0.01	0.00	0.01	0.01	46.90
Building Worker Trips	0.01	0.01	0.23	0.00	0.00	0.00	0.00	0.00	0.00	0.00	28.08
Building 02/21/2011-03/08/2011	0.04	0.33	0.33	0.00	0.00	0.01	0.02	0.00	0.01	0.01	70.31
Building Off Road Diesel	0.02	0.16	0.06	0.00	0.00	0.01	0.01	0.00	0.01	0.01	20.32
Building Vendor Trips	0.01	0.16	0.11	0.00	0.00	0.01	0.01	0.00	0.01	0.01	31.27
Building Worker Trips	0.00	0.01	0.15	0.00	0.00	0.00	0.00	0.00	0.00	0.00	18.72
Building 03/09/2011-03/16/2011	0.04	0.37	0.23	0.00	0.00	0.01	0.01	0.00	0.01	0.01	64.67
Building Off Road Diesel	0.03	0.29	0.10	0.00	0.00	0.01	0.01	0.00	0.01	0.01	39.67
Building Vendor Trips	0.01	0.08	0.06	0.00	0.00	0.00	0.00	0.00	0.00	0.00	15.63
Building Worker Trips	0.00	0.00	0.08	0.00	0.00	0.00	0.00	0.00	0.00	0.00	9.36
Fine Grading 03/17/2011-03/21/2011	0.01	0.05	0.02	0.00	0.11	0.00	0.11	0.02	0.00	0.02	6.30
Fine Grading Dust	0.00	0.00	0.00	0.00	0.11	0.00	0.11	0.02	0.00	0.02	0.00
Fine Grading Off Road Diesel	0.01	0.05	0.02	0.00	0.00	0.00	0.00	0.00	0.00	0.00	5.97
Fine Grading On Road Diesel	0.00	0.00	0.00	0.00	0.00	0.00	0.00	0.00	0.00	0.00	0.00
Fine Grading Worker Trips	0.00	0.00	0.00	0.00	0.00	0.00	0.00	0.00	0.00	0.00	0.33
Building 03/22/2011-03/23/2011	0.01	0.14	0.08	0.00	0.00	0.00	0.01	0.00	0.00	0.00	20.36
Building Off Road Diesel	0.01	0.11	0.04	0.00	0.00	0.00	0.00	0.00	0.00	0.00	12.03
Building Vendor Trips	0.00	0.03	0.02	0.00	0.00	0.00	0.00	0.00	0.00	0.00	5.21
Building Worker Trips	0.00	0.00	0.03	0.00	0.00	0.00	0.00	0.00	0.00	0.00	3.12
Mass Grading 03/22/2011-04/11/2011	0.01	0.12	0.05	0.00	0.54	0.00	0.55	0.11	0.00	0.12	16.32
Mass Grading Dust	0.00	0.00	0.00	0.00	0.54	0.00	0.54	0.11	0.00	0.11	0.00

5/11/2010 04:05:43 PM

Mass Grading Off Road Diesel	0.01	0.12	0.04	0.00	0.00	0.00	0.00	0.00	0.00	0.00	15.16
Mass Grading On Road Diesel	0.00	0.00	0.00	0.00	0.00	0.00	0.00	0.00	0.00	0.00	0.00
Mass Grading Worker Trips	0.00	0.00	0.01	0.00	0.00	0.00	0.00	0.00	0.00	0.00	1.16
Fine Grading 03/24/2011-03/25/2011	0.00	0.03	0.02	0.00	0.07	0.00	0.07	0.02	0.00	0.02	4.04
Fine Grading Dust	0.00	0.00	0.00	0.00	0.07	0.00	0.07	0.02	0.00	0.02	0.00
Fine Grading Off Road Diesel	0.00	0.03	0.01	0.00	0.00	0.00	0.00	0.00	0.00	0.00	3.79
Fine Grading On Road Diesel	0.00	0.00	0.00	0.00	0.00	0.00	0.00	0.00	0.00	0.00	0.00
Fine Grading Worker Trips	0.00	0.00	0.00	0.00	0.00	0.00	0.00	0.00	0.00	0.00	0.25
Demolition 03/28/2011-03/29/2011	0.00	0.03	0.01	0.00	0.00	0.00	0.00	0.00	0.00	0.00	4.08
Fugitive Dust	0.00	0.00	0.00	0.00	0.00	0.00	0.00	0.00	0.00	0.00	0.00
Demo Off Road Diesel	0.00	0.03	0.01	0.00	0.00	0.00	0.00	0.00	0.00	0.00	3.76
Demo On Road Diesel	0.00	0.00	0.00	0.00	0.00	0.00	0.00	0.00	0.00	0.00	0.13
Demo Worker Trips	0.00	0.00	0.00	0.00	0.00	0.00	0.00	0.00	0.00	0.00	0.19
Demolition 03/30/2011-04/01/2011	0.01	0.05	0.02	0.00	0.00	0.00	0.00	0.00	0.00	0.00	6.03
Fugitive Dust	0.00	0.00	0.00	0.00	0.00	0.00	0.00	0.00	0.00	0.00	0.00
Demo Off Road Diesel	0.00	0.04	0.02	0.00	0.00	0.00	0.00	0.00	0.00	0.00	5.55
Demo On Road Diesel	0.00	0.00	0.00	0.00	0.00	0.00	0.00	0.00	0.00	0.00	0.20
Demo Worker Trips	0.00	0.00	0.00	0.00	0.00	0.00	0.00	0.00	0.00	0.00	0.28
Building 04/04/2011-04/04/2011	0.00	0.02	0.02	0.00	0.00	0.00	0.00	0.00	0.00	0.00	5.15
Building Off Road Diesel	0.00	0.01	0.00	0.00	0.00	0.00	0.00	0.00	0.00	0.00	0.98
Building Vendor Trips	0.00	0.01	0.01	0.00	0.00	0.00	0.00	0.00	0.00	0.00	2.61
Building Worker Trips	0.00	0.00	0.01	0.00	0.00	0.00	0.00	0.00	0.00	0.00	1.56
Building 04/05/2011-04/07/2011	0.02	0.19	0.12	0.00	0.00	0.01	0.01	0.00	0.01	0.01	32.69
Building Off Road Diesel	0.01	0.15	0.05	0.00	0.00	0.01	0.01	0.00	0.00	0.00	20.19
Building Vendor Trips	0.00	0.04	0.03	0.00	0.00	0.00	0.00	0.00	0.00	0.00	7.82
Building Worker Trips	0.00	0.00	0.04	0.00	0.00	0.00	0.00	0.00	0.00	0.00	4.68
Fine Grading 04/08/2011-04/11/2011	0.00	0.03	0.02	0.00	0.07	0.00	0.07	0.02	0.00	0.02	4.20
Fine Grading Dust	0.00	0.00	0.00	0.00	0.07	0.00	0.07	0.02	0.00	0.02	0.00

5/11/2010 04:05:43 PM

Fine Grading Off Road Diesel	0.00	0.03	0.01	0.00	0.00	0.00	0.00	0.00	0.00	0.00	3.98
Fine Grading On Road Diesel	0.00	0.00	0.00	0.00	0.00	0.00	0.00	0.00	0.00	0.00	0.00
Fine Grading Worker Trips	0.00	0.00	0.00	0.00	0.00	0.00	0.00	0.00	0.00	0.00	0.22
Trenching 04/12/2011-04/15/2011	0.00	0.02	0.01	0.00	0.00	0.00	0.00	0.00	0.00	0.00	3.56
Trenching Off Road Diesel	0.00	0.02	0.01	0.00	0.00	0.00	0.00	0.00	0.00	0.00	3.37
Trenching Worker Trips	0.00	0.00	0.00	0.00	0.00	0.00	0.00	0.00	0.00	0.00	0.19
Building 04/18/2011-05/13/2011	0.06	0.59	0.55	0.00	0.00	0.02	0.03	0.00	0.02	0.02	123.28
Building Off Road Diesel	0.03	0.31	0.10	0.00	0.00	0.01	0.01	0.00	0.01	0.01	39.97
Building Vendor Trips	0.02	0.26	0.19	0.00	0.00	0.01	0.01	0.00	0.01	0.01	52.11
Building Worker Trips	0.01	0.01	0.26	0.00	0.00	0.00	0.00	0.00	0.00	0.00	31.20
Building 05/16/2011-05/23/2011	0.01	0.13	0.15	0.00	0.00	0.01	0.01	0.00	0.00	0.01	31.04
Building Off Road Diesel	0.01	0.05	0.02	0.00	0.00	0.00	0.00	0.00	0.00	0.00	6.05
Building Vendor Trips	0.01	0.08	0.06	0.00	0.00	0.00	0.00	0.00	0.00	0.00	15.63
Building Worker Trips	0.00	0.00	0.08	0.00	0.00	0.00	0.00	0.00	0.00	0.00	9.36

Phase Assumptions

Phase: Demolition 3/28/2011 - 3/29/2011 - LST Removal

Building Volume Total (cubic feet): 22500

Building Volume Daily (cubic feet): 2250

On Road Truck Travel (VMT): 31.25

Off-Road Equipment:

1 Cranes (350 hp) operating at a 0.43 load factor for 6 hours per day

4 Off Highway Trucks (300 hp) operating at a 0.57 load factor for 6 hours per day

1 Other Equipment (120 hp) operating at a 0.62 load factor for 6 hours per day

Phase: Demolition 3/30/2011 - 4/1/2011 - Remove Foundations

Building Volume Total (cubic feet): 22500

Building Volume Daily (cubic feet): 2250

On Road Truck Travel (VMT): 31.25

Off-Road Equipment:

2 Off Highway Trucks (350 hp) operating at a 0.57 load factor for 8 hours per day

5/11/2010 04:05:43 PM

2 Other Equipment (300 hp) operating at a 0.62 load factor for 2 hours per day

1 Other General Industrial Equipment (120 hp) operating at a 0.51 load factor for 6 hours per day

1 Tractors/Loaders/Backhoes (200 hp) operating at a 0.55 load factor for 8 hours per day

Phase: Fine Grading 1/3/2011 - 1/6/2011 - Roads and Landing Work

Total Acres Disturbed: 14.51

Maximum Daily Acreage Disturbed: 3.63

Fugitive Dust Level of Detail: Default

20 lbs per acre-day

On Road Truck Travel (VMT): 0

Off-Road Equipment:

1 Graders (350 hp) operating at a 0.61 load factor for 4 hours per day

1 Off Highway Trucks (350 hp) operating at a 0.57 load factor for 8 hours per day

2 Other Equipment (300 hp) operating at a 0.62 load factor for 2 hours per day

1 Other General Industrial Equipment (500 hp) operating at a 0.51 load factor for 2 hours per day

1 Other Material Handling Equipment (250 hp) operating at a 0.59 load factor for 4 hours per day

1 Rubber Tired Dozers (350 hp) operating at a 0.59 load factor for 6 hours per day

1 Tractors/Loaders/Backhoes (350 hp) operating at a 0.55 load factor for 6 hours per day

Phase: Fine Grading 3/17/2011 - 3/21/2011 - Restoration

Total Acres Disturbed: 14.51

Maximum Daily Acreage Disturbed: 3.63

Fugitive Dust Level of Detail: Default

20 lbs per acre-day

On Road Truck Travel (VMT): 0

Off-Road Equipment:

1 Graders (350 hp) operating at a 0.61 load factor for 6 hours per day

1 Off Highway Trucks (300 hp) operating at a 0.57 load factor for 3 hours per day

2 Other Equipment (300 hp) operating at a 0.62 load factor for 2 hours per day

1 Plate Compactors (250 hp) operating at a 0.43 load factor for 6 hours per day

1 Rubber Tired Dozers (350 hp) operating at a 0.59 load factor for 6 hours per day

1 Tractors/Loaders/Backhoes (350 hp) operating at a 0.55 load factor for 6 hours per day

Phase: Fine Grading 3/24/2011 - 3/25/2011 - Gen-Tie Roads & Landing Work

Total Acres Disturbed: 14.51

5/11/2010 04:05:43 PM

Maximum Daily Acreage Disturbed: 3.63

Fugitive Dust Level of Detail: Default

20 lbs per acre-day

On Road Truck Travel (VMT): 0

Off-Road Equipment:

1 Excavators (300 hp) operating at a 0.57 load factor for 6 hours per day

1 Graders (350 hp) operating at a 0.61 load factor for 4 hours per day

1 Off Highway Trucks (500 hp) operating at a 0.57 load factor for 2 hours per day

2 Other Equipment (30 hp) operating at a 0.62 load factor for 2 hours per day

1 Plate Compactors (250 hp) operating at a 0.43 load factor for 4 hours per day

1 Rubber Tired Dozers (350 hp) operating at a 0.59 load factor for 6 hours per day

1 Tractors/Loaders/Backhoes (350 hp) operating at a 0.55 load factor for 6 hours per day

Phase: Fine Grading 4/8/2011 - 4/11/2011 - Gen-Tie Restoration

Total Acres Disturbed: 14.51

Maximum Daily Acreage Disturbed: 3.63

Fugitive Dust Level of Detail: Default

20 lbs per acre-day

On Road Truck Travel (VMT): 0

Off-Road Equipment:

1 Graders (350 hp) operating at a 0.61 load factor for 6 hours per day

1 Off Highway Trucks (300 hp) operating at a 0.57 load factor for 3 hours per day

2 Other Equipment (300 hp) operating at a 0.62 load factor for 2 hours per day

1 Plate Compactors (250 hp) operating at a 0.43 load factor for 6 hours per day

1 Rubber Tired Dozers (350 hp) operating at a 0.59 load factor for 6 hours per day

1 Tractors/Loaders/Backhoes (350 hp) operating at a 0.55 load factor for 6 hours per day

Phase: Mass Grading 1/3/2011 - 3/21/2011 - Temporary Equipment and Material Staging Area

Total Acres Disturbed: 14.51

Maximum Daily Acreage Disturbed: 3.63

Fugitive Dust Level of Detail: Default

20 lbs per acre-day

On Road Truck Travel (VMT): 0

Off-Road Equipment:

1 Cranes (300 hp) operating at a 0.43 load factor for 2 hours per day

5/11/2010 04:05:43 PM

1 Forklifts (200 hp) operating at a 0.3 load factor for 5 hours per day

1 Off Highway Trucks (350 hp) operating at a 0.57 load factor for 1 hours per day

1 Other Equipment (300 hp) operating at a 0.62 load factor for 2 hours per day

1 Water Trucks (350 hp) operating at a 0.5 load factor for 4 hours per day

Phase: Mass Grading 3/22/2011 - 4/11/2011 - Gen-Tie Temporary Equipment & Material Staging

Total Acres Disturbed: 14.51

Maximum Daily Acreage Disturbed: 3.63

Fugitive Dust Level of Detail: Default

20 lbs per acre-day

On Road Truck Travel (VMT): 0

Off-Road Equipment:

1 Cranes (300 hp) operating at a 0.43 load factor for 2 hours per day

1 Off Highway Trucks (350 hp) operating at a 0.57 load factor for 1 hours per day

1 Other Equipment (300 hp) operating at a 0.62 load factor for 2 hours per day

1 Rough Terrain Forklifts (200 hp) operating at a 0.6 load factor for 5 hours per day

1 Water Trucks (350 hp) operating at a 0.5 load factor for 8 hours per day

Phase: Trenching 1/7/2011 - 1/19/2011 - Install LST Foundations

Off-Road Equipment:

1 Cranes (300 hp) operating at a 0.43 load factor for 5 hours per day

3 Off Highway Trucks (500 hp) operating at a 0.57 load factor for 8 hours per day

2 Other Equipment (300 hp) operating at a 0.62 load factor for 2 hours per day

1 Tractors/Loaders/Backhoes (200 hp) operating at a 0.55 load factor for 8 hours per day

Phase: Trenching 4/12/2011 - 4/15/2011 - Trenching, Structure Excavation

Off-Road Equipment:

1 Off Highway Trucks (300 hp) operating at a 0.57 load factor for 4 hours per day

1 Other Equipment (300 hp) operating at a 0.62 load factor for 2 hours per day

1 Tractors/Loaders/Backhoes (300 hp) operating at a 0.55 load factor for 8 hours per day

Phase: Building Construction 2/21/2011 - 3/8/2011 - LST Erection

Off-Road Equipment:

1 Cranes (350 hp) operating at a 0.43 load factor for 6 hours per day

2 Off Highway Trucks (300 hp) operating at a 0.57 load factor for 5 hours per day

5/11/2010 04:05:43 PM

2 Other Equipment (300 hp) operating at a 0.62 load factor for 5 hours per day

1 Other General Industrial Equipment (120 hp) operating at a 0.51 load factor for 6 hours per day

Phase: Building Construction 1/20/2011 - 1/25/2011 - LST Steel Haul

Off-Road Equipment:

1 Forklifts (200 hp) operating at a 0.3 load factor for 6 hours per day

1 Off Highway Trucks (350 hp) operating at a 0.57 load factor for 8 hours per day

2 Other Equipment (300 hp) operating at a 0.62 load factor for 2 hours per day

Phase: Building Construction 1/26/2011 - 2/18/2011 - LST Steel Assembly

Off-Road Equipment:

2 Cranes (300 hp) operating at a 0.43 load factor for 8 hours per day

1 Forklifts (200 hp) operating at a 0.3 load factor for 6 hours per day

3 Off Highway Trucks (300 hp) operating at a 0.57 load factor for 4 hours per day

2 Other Equipment (300 hp) operating at a 0.62 load factor for 4 hours per day

2 Other General Industrial Equipment (350 hp) operating at a 0.51 load factor for 6 hours per day

Phase: Building Construction 3/9/2011 - 3/16/2011 - Install Conductor & OHGW

Off-Road Equipment:

3 Bore/Drill Rigs (350 hp) operating at a 0.75 load factor for 2 hours per day

1 Concrete/Industrial Saws (10 hp) operating at a 0.73 load factor for 8 hours per day

2 Cranes (350 hp) operating at a 0.43 load factor for 8 hours per day

1 Forklifts (350 hp) operating at a 0.3 load factor for 2 hours per day

3 Off Highway Trucks (350 hp) operating at a 0.57 load factor for 2 hours per day

7 Other Equipment (300 hp) operating at a 0.62 load factor for 8 hours per day

1 Other General Industrial Equipment (525 hp) operating at a 0.51 load factor for 3 hours per day

1 Other Material Handling Equipment (500 hp) operating at a 0.59 load factor for 2 hours per day

1 Rubber Tired Loaders (300 hp) operating at a 0.54 load factor for 3 hours per day

1 Tractors/Loaders/Backhoes (120 hp) operating at a 0.55 load factor for 2 hours per day

Phase: Building Construction 3/22/2011 - 3/23/2011 - Gen-Tie Install Conductor & GW

Off-Road Equipment:

3 Cranes (350 hp) operating at a 0.43 load factor for 8 hours per day

3 Off Highway Trucks (350 hp) operating at a 0.57 load factor for 2 hours per day

3 Other Equipment (300 hp) operating at a 0.62 load factor for 8 hours per day

5/11/2010 04:05:43 PM

5 Other General Industrial Equipment (350 hp) operating at a 0.51 load factor for 6 hours per day
1 Other Material Handling Equipment (525 hp) operating at a 0.59 load factor for 6 hours per day
2 Rubber Tired Dozers (500 hp) operating at a 0.59 load factor for 2 hours per day
1 Tractors/Loaders/Backhoes (120 hp) operating at a 0.55 load factor for 2 hours per day

Phase: Building Construction 4/4/2011 - 4/4/2011 - Gen-Tie LST Steel Haul
Off-Road Equipment:
1 Off Highway Trucks (350 hp) operating at a 0.57 load factor for 8 hours per day
1 Other Equipment (300 hp) operating at a 0.62 load factor for 2 hours per day
1 Rough Terrain Forklifts (200 hp) operating at a 0.6 load factor for 6 hours per day

Phase: Building Construction 4/5/2011 - 4/7/2011 - Gen-Tie Transfer Conductor
Off-Road Equipment:
3 Bore/Drill Rigs (350 hp) operating at a 0.75 load factor for 2 hours per day
1 Concrete/Industrial Saws (10 hp) operating at a 0.73 load factor for 8 hours per day
2 Cranes (350 hp) operating at a 0.43 load factor for 8 hours per day
3 Off Highway Trucks (350 hp) operating at a 0.57 load factor for 2 hours per day
7 Other Equipment (300 hp) operating at a 0.62 load factor for 8 hours per day
1 Other General Industrial Equipment (525 hp) operating at a 0.51 load factor for 3 hours per day
1 Other Material Handling Equipment (500 hp) operating at a 0.59 load factor for 2 hours per day
1 Rough Terrain Forklifts (350 hp) operating at a 0.6 load factor for 2 hours per day
1 Rubber Tired Loaders (300 hp) operating at a 0.54 load factor for 3 hours per day
1 Tractors/Loaders/Backhoes (120 hp) operating at a 0.55 load factor for 2 hours per day

Phase: Building Construction 4/18/2011 - 5/13/2011 - Overhead Line Work
Off-Road Equipment:
3 Off Highway Trucks (350 hp) operating at a 0.57 load factor for 8 hours per day
2 Other Equipment (300 hp) operating at a 0.62 load factor for 2 hours per day

Phase: Building Construction 5/16/2011 - 5/23/2011 - Underground Cable Pulling and Makeup
Off-Road Equipment:
1 Off Highway Trucks (350 hp) operating at a 0.57 load factor for 8 hours per day
1 Other Equipment (300 hp) operating at a 0.62 load factor for 2 hours per day
1 Other General Industrial Equipment (300 hp) operating at a 0.51 load factor for 6 hours per day

5/11/2010 04:58:50 PM

Urbemis 2007 Version 9.2.4

Combined Annual Emissions Reports (Tons/Year)

File Name:

Project Name: Telecommunication System

Project Location: San Bernadino County

On-Road Vehicle Emissions Based on: Version : Emfac2007 V2.3 Nov 1 2006

Off-Road Vehicle Emissions Based on: OFFROAD2007

Summary Report:

CONSTRUCTION EMISSION ESTIMATES

	ROG	NOx	CO	SO2	PM10 Dust	PM10 Exhaust	PM10	PM2.5 Dust	PM2.5 Exhaust	PM2.5	CO2
2011 TOTALS (tons/year unmitigated)	0.33	3.09	1.84	0.00	5.53	0.11	5.64	1.16	0.10	1.26	488.88

Construction Unmitigated Detail Report:

CONSTRUCTION EMISSION ESTIMATES Annual Tons Per Year, Unmitigated

	ROG	NOx	CO	SO2	PM10 Dust	PM10 Exhaust	PM10	PM2.5 Dust	PM2.5 Exhaust	PM2.5	CO2
2011	0.33	3.09	1.84	0.00	5.53	0.11	5.64	1.16	0.10	1.26	488.88
Building 01/10/2011-02/01/2011	0.05	0.51	0.45	0.00	0.00	0.02	0.02	0.00	0.02	0.02	95.94
Building Off Road Diesel	0.03	0.31	0.13	0.00	0.00	0.01	0.01	0.00	0.01	0.01	36.67
Building Vendor Trips	0.02	0.19	0.14	0.00	0.00	0.01	0.01	0.00	0.01	0.01	37.07
Building Worker Trips	0.01	0.01	0.18	0.00	0.00	0.00	0.00	0.00	0.00	0.00	22.20
Mass Grading 01/10/2011-05/23/2011	0.08	0.79	0.31	0.00	2.77	0.03	2.79	0.58	0.03	0.60	104.45
Mass Grading Dust	0.00	0.00	0.00	0.00	2.76	0.00	2.76	0.58	0.00	0.58	0.00
Mass Grading Off Road Diesel	0.08	0.78	0.25	0.00	0.00	0.03	0.03	0.00	0.02	0.02	97.02
Mass Grading On Road Diesel	0.00	0.00	0.00	0.00	0.00	0.00	0.00	0.00	0.00	0.00	0.00
Mass Grading Worker Trips	0.00	0.00	0.06	0.00	0.00	0.00	0.00	0.00	0.00	0.00	7.43
Building 02/02/2011-03/04/2011	0.05	0.45	0.49	0.00	0.00	0.02	0.02	0.00	0.02	0.02	104.20
Building Off Road Diesel	0.02	0.18	0.06	0.00	0.00	0.01	0.01	0.00	0.01	0.01	24.01
Building Vendor Trips	0.02	0.25	0.18	0.00	0.00	0.01	0.01	0.00	0.01	0.01	50.16

5/11/2010 04:58:50 PM

Building Worker Trips	0.01	0.01	0.25	0.00	0.00	0.00	0.00	0.00	0.00	0.00	30.03
Trenching 03/07/2011-03/16/2011	0.01	0.10	0.04	0.00	0.00	0.00	0.00	0.00	0.00	0.00	13.03
Trenching Off Road Diesel	0.01	0.10	0.03	0.00	0.00	0.00	0.00	0.00	0.00	0.00	12.41
Trenching Worker Trips	0.00	0.00	0.01	0.00	0.00	0.00	0.00	0.00	0.00	0.00	0.62
Building 03/17/2011-03/21/2011	0.01	0.09	0.07	0.00	0.00	0.00	0.00	0.00	0.00	0.00	17.25
Building Off Road Diesel	0.00	0.05	0.02	0.00	0.00	0.00	0.00	0.00	0.00	0.00	6.79
Building Vendor Trips	0.00	0.03	0.02	0.00	0.00	0.00	0.00	0.00	0.00	0.00	6.54
Building Worker Trips	0.00	0.00	0.03	0.00	0.00	0.00	0.00	0.00	0.00	0.00	3.92
Fine Grading 03/22/2011-04/05/2011	0.04	0.46	0.16	0.00	1.78	0.02	1.80	0.37	0.01	0.39	65.10
Fine Grading Dust	0.00	0.00	0.00	0.00	1.78	0.00	1.78	0.37	0.00	0.37	0.00
Fine Grading Off Road Diesel	0.04	0.46	0.15	0.00	0.00	0.02	0.02	0.00	0.01	0.01	63.40
Fine Grading On Road Diesel	0.00	0.00	0.00	0.00	0.00	0.00	0.00	0.00	0.00	0.00	0.00
Fine Grading Worker Trips	0.00	0.00	0.01	0.00	0.00	0.00	0.00	0.00	0.00	0.00	1.70
Fine Grading 04/06/2011-05/23/2011	0.08	0.71	0.33	0.00	0.98	0.03	1.01	0.20	0.02	0.23	88.91
Fine Grading Dust	0.00	0.00	0.00	0.00	0.98	0.00	0.98	0.20	0.00	0.20	0.00
Fine Grading Off Road Diesel	0.08	0.71	0.30	0.00	0.00	0.03	0.03	0.00	0.02	0.02	84.70
Fine Grading On Road Diesel	0.00	0.00	0.00	0.00	0.00	0.00	0.00	0.00	0.00	0.00	0.00
Fine Grading Worker Trips	0.00	0.00	0.03	0.00	0.00	0.00	0.00	0.00	0.00	0.00	4.21

Phase Assumptions

Phase: Fine Grading 3/22/2011 - 4/5/2011 - Install Fiber Optic Cable

Total Acres Disturbed: 11.53

Maximum Daily Acreage Disturbed: 2.88

Fugitive Dust Level of Detail: Low

Onsite Cut/Fill: 2500 cubic yards/day; Offsite Cut/Fill: 0 cubic yards/day

On Road Truck Travel (VMT): 0

Off-Road Equipment:

2 Off Highway Trucks (350 hp) operating at a 0.57 load factor for 8 hours per day

8 Other Equipment (300 hp) operating at a 0.62 load factor for 8 hours per day

5/11/2010 04:58:50 PM

Phase: Fine Grading 4/6/2011 - 5/23/2011 - Restoration

Total Acres Disturbed: 11.53

Maximum Daily Acreage Disturbed: 2.88

Fugitive Dust Level of Detail: Default

20 lbs per acre-day

On Road Truck Travel (VMT): 0

Off-Road Equipment:

1 Graders (350 hp) operating at a 0.61 load factor for 6 hours per day

1 Off Highway Trucks (300 hp) operating at a 0.57 load factor for 3 hours per day

2 Other Equipment (300 hp) operating at a 0.62 load factor for 2 hours per day

1 Plate Compactors (250 hp) operating at a 0.43 load factor for 6 hours per day

1 Rubber Tired Dozers (350 hp) operating at a 0.59 load factor for 6 hours per day

1 Tractors/Loaders/Backhoes (350 hp) operating at a 0.55 load factor for 6 hours per day

1 Water Trucks (350 hp) operating at a 0.5 load factor for 8 hours per day

Phase: Mass Grading 1/10/2011 - 5/23/2011 - Marshalling Yard

Total Acres Disturbed: 11.53

Maximum Daily Acreage Disturbed: 2.88

Fugitive Dust Level of Detail: Default

20 lbs per acre-day

On Road Truck Travel (VMT): 0

Off-Road Equipment:

1 Cranes (300 hp) operating at a 0.43 load factor for 2 hours per day

1 Off Highway Trucks (350 hp) operating at a 0.57 load factor for 1 hours per day

1 Other Equipment (300 hp) operating at a 0.62 load factor for 2 hours per day

1 Rough Terrain Forklifts (200 hp) operating at a 0.6 load factor for 5 hours per day

1 Water Trucks (350 hp) operating at a 0.5 load factor for 8 hours per day

Phase: Trenching 3/7/2011 - 3/16/2011 - Install LWS Poles

Off-Road Equipment:

1 Off Highway Trucks (500 hp) operating at a 0.57 load factor for 8 hours per day

3 Other Equipment (300 hp) operating at a 0.62 load factor for 2 hours per day

1 Tractors/Loaders/Backhoes (200 hp) operating at a 0.55 load factor for 8 hours per day

Phase: Building Construction 1/10/2011 - 2/1/2011 - Roads

5/11/2010 04:58:50 PM

Off-Road Equipment:

1 Excavators (300 hp) operating at a 0.57 load factor for 6 hours per day

1 Graders (350 hp) operating at a 0.61 load factor for 4 hours per day

1 Off Highway Trucks (500 hp) operating at a 0.57 load factor for 2 hours per day

2 Other Equipment (300 hp) operating at a 0.62 load factor for 2 hours per day

1 Plate Compactors (250 hp) operating at a 0.43 load factor for 4 hours per day

1 Rubber Tired Dozers (350 hp) operating at a 0.59 load factor for 6 hours per day

1 Tractors/Loaders/Backhoes (350 hp) operating at a 0.55 load factor for 6 hours per day

Phase: Building Construction 2/2/2011 - 3/4/2011 - Install 5 foot Crossarm

Off-Road Equipment:

2 Off Highway Trucks (300 hp) operating at a 0.57 load factor for 5 hours per day

3 Other Equipment (300 hp) operating at a 0.62 load factor for 2 hours per day

Phase: Building Construction 3/17/2011 - 3/21/2011 - Steel Pole Haul

Off-Road Equipment:

3 Off Highway Trucks (300 hp) operating at a 0.57 load factor for 5 hours per day

2 Other Equipment (350 hp) operating at a 0.62 load factor for 8 hours per day

gigawatt-hours (GWh). Ancillary services[23] include regulation, spinning reserve, non-spinning reserve, voltage support, and black start capability. Individual generation resources can be built and operated to provide only one specific service. Alternatively, a resource may be able to provide one or all of these services, depending on its design and constantly changing system needs and operations.

California is actively pursuing policies to reduce GHG emissions that include adding non-GHG emitting renewable generation resources to the system mix. The generation of electricity using fossil fuels, even in a back-up generator at a thermal solar plant, produces air emissions known as greenhouse gases in addition to the criteria air pollutants that have been traditionally regulated under the federal and state Clean Air Acts. Greenhouse gas emissions contribute to the warming of the earth's atmosphere, leading to climate change.

PROJECT CONSTRUCTION

Construction of industrial facilities such as power plants requires coordination of numerous equipment and personnel. The concentrated on-site activities result in short-term, unavoidable increases in vehicle and equipment emissions that include greenhouse gases. The construction would last approximately 26 months. The greenhouse gas emissions estimate, for the entire construction period, provided by the applicant[24] is below in **Greenhouse Gas Table 2**.

Greenhouse Gas Table 2
Estimated AMS Potential Construction Greenhouse Gas Emissions

	CO_2-Equivalent (MTCO2E) [a,b]
Onsite Equipment (all four phases)	29,661
Delivery Vehicles	2,984
Construction Worker Vehicles	10,369
Entire Construction Period Total	**43,015 [c]**

Source: ESH 2010g.
[a] One metric tonne (MT) equals 1.1 short tons or 2,204.6 pounds or 1,000 kilograms.
[b] The vast majority of the CO2E emissions, over 99%, is CO_2 from construction combustion sources.
[c] Staff performed a separate construction emission estimate and determined considerably lower total construction period CO_2 emissions than estimated by the applicant, but has retained the more conservative applicant estimate. Staff's estimate shows higher on-road equipment emissions (delivery and worker vehicles emissions), but substantially lower off-road equipment emissions due to two main factors: 1) the applicant estimated emissions for a large number of onsite on-road equipment as if they were off-road equipment. The applicant did not appear to apply load factors to adjust the off-road equipment horsepower hour estimate down from 100 percent load.

[23] See page CEC 2009b, page 95.

[24] As noted in the Air Quality Section staff may be re-estimating certain construction emissions which would revise some of the values in **Greenhouse Gas Table 2**. If so, staff will provide a revised construction GHG emission estimate as part of a Staff Assessment Addendum.

PROJECT OPERATIONS

Operations GHG emissions are shown in **Greenhouse Gas Table 3**. Operation of the AMS would cause GHG emissions from the auxiliary boiler, fire pump engine, emergency generator engine, maintenance fleet and employee trips, and sulfur hexafluoride emissions from new electrical component equipment.

Greenhouse Gas Table 3
Estimated AMS Potential Operating Greenhouse Gas Emissions

	Annual CO_2-Equivalent (MTCO2E)[a]
Auxiliary HTF Heaters [b]	10,018
Emergency Generator Engine [b]	183.2
Fire Pump Engine [b]	8.1
Maintenance Vehicles [b]	119.6
Delivery Vehicles [b]	31.3
Employee Vehicles [b]	512.7
Equipment Leakage (SF_6)	10.5
Total Project GHG Emissions – MTCO2E [b]	**10,884**
Facility MWh per year	600,000
Facility GHG Emission Rate (MTCO2E/MWh)	0.018

Sources: ESH 2010g
[a] One metric tonne (MT) equals 1.1 short tons or 2,204.6 pounds or 1,000 kilograms.
[b] The vast majority of the CO2E emissions, over 99%, is CO_2 from these emission sources.

Greenhouse Gas Table 3 shows what the proposed project, as permitted, could potentially emit in greenhouse gases on an annual basis. All emissions are converted to CO_2-equivalent and totaled. Electricity generation GHG emissions are generally dominated by CO_2 emissions from the carbon-based fuels; other sources of GHG are typically small and also are more likely to be easily controlled or reused/recycled. For this solar project the primary fuel, solar energy, is greenhouse gas free, but there is natural gas use in the two auxiliary HTF heaters used for morning startup and for freeze protection, and gasoline and diesel fuel use in the maintenance vehicles, offsite delivery vehicles, staff and employee vehicles, the two fire water pump engines, and the two emergency generator engines. Another GHG emission source for this proposed project is SF_6 from electrical equipment leakage.

The proposed project is estimated to emit, directly from primary and secondary emission sources on an annual basis, nearly 11,000 metric tonnes of CO_2-equivalent GHG emissions per year. AMS, as a renewable energy generation facility, is determined by rule to comply with the Greenhouse Gas Emission Performance Standard requirements of SB 1368 (Chapter 11, Greenhouse Gases Emission Performance Standard, Article 1, Section 2903 [b][1]). Regardless, AMS has an estimated GHG emission rate of 0.018 MTCO2E/MWh, well below the Greenhouse Gas Emission Performance Standard of 0.500 MTCO2/MWh.

Item 85:

Information Required:

Please provide DPM emission factors from construction activities and a health risk assessment for diesel construction equipment emissions.

Response:

The Applicant originally requested additional time for this item but was able to obtain the necessary vendor information in time to respond with this filing.

The emissions factors for DPM from construction activities are clearly presented in Table C.5-5 of the AFC. Exhaust DPM data for the majority of the construction related equipment is presented on page 3 of the Construction Equipment Exhaust Emissions (titled 2010 Equipment Emissions Factors). In addition, DPM emissions factors are presented in Table C.5-5 of the AFC at the following sheet locations: (1) Truck Delivery and Site Support Vehicle Emissions, and (2) Worker Travel Emissions.
The construction screening HRA requested by CEC staff was performed using the following assumptions as follows:

- The three highest construction offsite MIR receptors were chosen based upon the construction modeling as revised per the data requests in the Air Quality section above.
- Cancer risk and chronic hazard indices were computed using the screening methodology as outlined in the South Coast AQMD (Health Risk Assessment Guidance for Analyzing Cancer Risks from Mobile Source Diesel Emissions, December 2002, and HRA guidance for Analyzing Cancer Risks from Mobile Source Diesel Idling Emissions for CEQA Air Quality Analysis, August 2003).
- A cancer inhalation unit risk value of 0.0003 $(ug/m^3)^{-1}$ was used.
- A cancer chronic inhalation REL of 5.0 $(ug/m^3)^{-1}$ was used.
- No acute inhalation REL exists for diesel PM.
- The adjustment factor applied to the final risk and hazard index values was based upon a construction work schedule of 10 hrs/day, 6 days/week, 50 weeks/year, for 26 months (2.167 yrs), i.e., lifetime exposure adjustment (LEA) factor value of 0.0106.

With respect to emissions from diesel fueled engines, use of the diesel PM exposure factors noted above are approved by CARB for the characterization of diesel engine exhaust and subsequent risk exposures. The diesel PM factor includes the range of fuel bound, and potentially emitted metals, PAHs, and a wide variety of other semi-volatile

substances. CARB notes the following in Appendix K of the current HARP Users Manual:

- The surrogate for whole diesel exhaust is diesel PM. PM10 is the basis for the potential risk calculations.
- When conducting an HRA, the potential cancer risk from inhalation exposure to diesel PM will outweigh the potential non-cancer health effects.
- When comparing whole diesel exhaust to speciated diesel exhaust, potential cancer risk from inhalation exposure to whole diesel exhaust will outweigh the multi-pathway cancer risk from the speciated compounds. For this reason, there will be few situations where an analysis of multi-pathway risk is necessary.

With respect to diesel particulate related risk values, the following should be noted:

- The US Department of Energy (DOE) as well as the US Environmental Protection Agency (EPA) have disagreed with the CARB/OEHHA and South Coast AQMD positions on the relative threat and relative contribution of diesel exhaust to “toxic” air pollution, and neither of the agencies, including the EPA’s prestigious Health Effects Institute identify diesel exhaust as a “known” carcinogen, since the scientific studies show only “weak” cancer links. EPA and DOE believe that the studies relied upon by CARB and SCAQMD are flawed in that they use a problematic elemental carbon surrogate for ambient diesel particulate matter and ignored a significant portion of PM2.5 captured at the SCAQMD’s own monitoring stations. In view of these conflicting studies, we suggest that caution be used in the decision making process regarding diesel PM and its associated risks, i.e., the actual risks may be much lower than those calculated by screening method herein. For these reasons, the risk table below reports the construction risk values using DPM only, and the inhalation pathway.

The following table presents the results of the screening level assessment of health risks from the construction phase.

Construction Screening HRA Summary					
MIR #	Annual, ug/m^3 (met year)	UTM E	UTM N	Cancer Risk	Chronic HI
Phase I					
1	0.48412 (2003)	470329.33	3875250.00	1.54 E-6	0.001
2	0.46946 (2004)	470329.33	3875250.00	1.49 E-6	0.001
3	0.46336 (2002)	470329.33	3875250.00	1.47 E-6	0.001
Phase II-IV					

1	0.72114 (2003)	470329.33	3875250.00	2.29 E-6	0.0015
2	0.69931 (2004)	470329.33	3875250.00	2.22 E-6	0.0015
3	0.69022 (2002)	470329.33	3875250.00	2.19 E-6	0.0015

Item 86:

Information Required:

Please provide DPM emission factors for on-site solar field and equipment maintenance activities in pounds per day and tons per year. This value can be submitted as a single number estimate of total emissions from all vehicular sources used on-site.

Response:

Table C.1-7, provided in Appendix C.1 of the AFC, has been slightly revised and is attached (tables included with Data Request Item 6). This table indicates the DPM emissions and emissions factors used to estimate on-site facility operations and maintenance emissions. DPM emissions values presented in the original table, as well as the revised table, are given in terms of lbs/VMT, lbs/hp-hr, lbs/avg day, lbs/year, and tons/yr. DPM emissions in terms of lbs/day, although given, are not used in the HRA since an acute REL has not been established for DPM.

Item 87:

This item is linked to the items 84 and 85 and the Applicant has requested an extension of this item in connection to the letter “Abengoa Mojave Solar Project (09-AFC-5): Notice Pursuant to 20 CCR 1716(f): Data Request Set 1 (nos. 1-93)” dated November 11, 2009 and docketed regarding this item. The Applicant mistakenly omitted this item from the aforementioned letter.

Item 88:

Information Required:

Please provide a cumulative PM2.5 emissions estimate on a daily and yearly basis when fugitive dust emissions are added to the DPM emissions from the above stationary and mobile sources, assuming that all DPM from diesel engines are PM2.5.

Response:

Please see Response to Item 29 above.

terms of lbs/VMT, lbs/hp-hr, lbs/avg day, lbs/year, and tons/yr. DPM emissions in terms of lbs/day, although given, are not used in the HRA since an acute REL has not been established for DPM.

Item 87 (Initial Response, per Extension Request):

Information Required:

Please conduct a health risk assessment for diesel emissions from vehicles involved in on-site solar field and equipment maintenance activities during plant operations.

Response:

Revised emissions values and operational scenarios for the facility were re-evaluated using HARP. The revised HRA values for the facility are as follows:

Boilers, Stationary Engines, Cooling Towers, HTF System, Mobile Ops Vehicles		
Risk Category	**MIR Project Values**	**Applicable Significance Threshold**
Cancer Risk	6.85 E-6	See Table 5.10-4 in Section 5.1 (Air Quality)
Chronic Hazard Index	0.00992	
Acute Hazard Index	0.0087	
Cancer Burden	0.0001[1]	
MIR Receptor #: 302 , and location 473151mE, 3873400mN. Acute MIR, Receptor #130, HI=0.026, 469945mE, 3874500mN.		

* No acute REL has been established for diesel PM.

[1] The 10^{-6} MIR radius is located ~1815 ft. from the site center. The estimated population within this radius is less than 100 individuals, therefore the cancer burden is 0.0001

The input and output files applicable to the revised HRA are included on the CD which accompanies these responses.

Item 88 (Revised):

Information Required:

Please provide a cumulative PM2.5 emissions estimate on a daily and yearly basis when fugitive dust emissions are added to the DPM emissions from the above stationary and mobile sources, assuming that all DPM from diesel engines are PM2.5.

Response:

Please see the emissions summary table in response to Item 29 above.

Table C.5-7 Offsite Equipment and Manpower Schedules
Offsite Construction Vehicles

VEHICLE TYPE	HP	Fuel Type	Load Factor (%)	USAGE DESCRIPTION
Off-Site Flat Bed Trucks (From Rail Facility)	200	gasoline		Material Hauling
Off-Site Asphalt Trucks	200	diesel		Asphalt Hauling
Off-Site Concrete Trucks	310	diesel		Concrete Delivery
Off-Site Construction Worker Commute	180	gasoline		Personal vehicle (see commute table below)
Off-Site Dump Trucks	275	diesel		Material Hauling
Off-Site Low Boy Trucks (From Rail Facility)	250	diesel		Material Hauling
Off-Site Pickup Trucks	200	gasoline		Light duty material hauling
Off-Site Pipe Hauling Trucks (From Rail Facility)	250	diesel		Piping material hauling
Off-Site Water Trucks	250	diesel		Dust suppression water
Off-Site Fuel/Lube Trucks	200	gasoline		Mobile fuel & lubrication services
Off-Site HTF Delivery Trucks (From Rail Facility)	250	diesel		Delivery of HTF (transfer from rail yard)
Off-Site Box Van Trucks	200	diesel		Material Hauling (Small items / Dry Requirement Items)

Note: Use separate sheet (Site Construction Equipment) for on-site vehicles

Average Vehicle Miles Traveled per Day and Number of Vehicles

VEHICLE TYPE	Mi./ Veh.-Day*	Number M1	M2	M3	M4	M5	M6	M7	M8	M9	M10	M11	M12	M13	M14	M15	M16	M17	M18	M19	M20	M21	M22	M23	M24	M25	M26
Off-Site Flat Bed Trucks (From Rail Facility)	50	1	2	2	2	2	2	2	2	2	2	2	2	2	2	2	2	2	3	3	3	3	3	3	3	2	2
Off-Site Asphalt Trucks	50	0	0	0	0	0	0	0	0	0	0	0	0	0	0	0	0	0	0	0	0	0	3	3	3	3	2
Off-Site Concrete Trucks	50	1	12	46	46	55	55	55	55	55	55	55	55	55	55	55	55	55	55	55	55	46	46	46	37	14	4
Off-Site Dump Trucks	50	1	1	1	1	0	0	0	0	0	0	0	0	0	0	0	0	0	0	0	0	0	0	0	0	0	0
Off-Site Low Boy Trucks (From Rail Facility)	50	1	1	1	2	2	2	2	2	2	2	2	2	2	2	2	2	2	2	2	2	2	2	2	2	1	1
Off-Site Pickup Trucks	50	0	0	0	0	0	0	0	0	0	0	0	0	0	0	0	0	0	0	0	0	1	1	1	1	1	0
Off-Site Pipe Hauling Trucks (From Rail Facility)	50	0	0	0	0	0	0	0	0	0	3	4	5	5	5	5	5	5	5	4	2	0	0	0	0	0	0
Off-Site Water Trucks	50	1	1	1	0	0	0	0	0	0	0	0	0	0	0	0	0	0	0	0	0	0	0	0	0	0	0
Off-Site Fuel/Lube Trucks	50	1	1	1	1	1	1	1	1	1	1	1	1	1	1	1	1	1	1	1	1	1	1	1	1	1	0
Off-Site HTF Delivery Trucks (From Rail Facility)	50	0	0	0	0	0	0	0	0	0	0	0	0	0	0	0	0	0	1	2	2	2	2	2	2	2	2
Off-Site Box Van Trucks	50	0	0	0	0	0	0	0	0	0	0	0	0	0	0	0	2	2	2	2	2	2	2	2	2	1	0

Daily Mileage Accumulation

VEHICLE TYPE	Mi./ Veh.-Day*	Vehicle-Miles-Traveled (mi/day) M1	M2	M3	M4	M5	M6	M7	M8	M9	M10	M11	M12	M13	M14	M15	M16	M17	M18	M19	M20	M21	M22	M23	M24	M25	M26	VMT		Const Period Delivery data diesel VMT	gasoline VMT
Off-Site Flat Bed Trucks (From Rail Facility)	50	50	100	100	100	100	100	100	100	100	100	100	100	100	100	100	100	100	150	150	150	150	150	150	150	100	100	62350	gasoline	**1429750**	**94600**
Off-Site Asphalt Trucks	50	0	0	0	0	0	0	0	0	0	0	0	0	0	0	0	0	0	0	0	0	0	150	150	150	150	100	15050	diesel		
Off-Site Concrete Trucks	50	50	600	2,300	2,300	2,750	2,750	2,750	2,750	2,750	2,750	2,750	2,750	2,750	2,750	2,750	2,750	2,750	2,750	2,750	2,750	2,300	2,300	2,300	1,850	700	200	1266350	diesel		
Off-Site Dump Trucks	50	50	50	50	50	0	0	0	0	0	0	0	0	0	0	0	0	0	0	0	0	0	0	0	0	0	0	4300	diesel		
Off-Site Low Boy Trucks (From Rail Facility)	50	50	50	50	100	100	100	100	100	100	100	100	100	100	100	100	100	100	100	100	100	100	100	100	100	50	50	50525	diesel		
Off-Site Pickup Trucks	50	0	0	0	0	0	0	0	0	0	0	0	0	0	0	0	0	0	0	0	0	50	50	50	50	50	0	5375	gasoline		
Off-Site Pipe Hauling Trucks (From Rail Facility)	50	0	0	0	0	0	0	0	0	0	150	200	250	250	250	250	250	250	250	200	100	0	0	0	0	0	0	51600	diesel		
Off-Site Water Trucks	50	50	50	50	0	0	0	0	0	0	0	0	0	0	0	0	0	0	0	0	0	0	0	0	0	0	0	3225	diesel		
Off-Site Fuel/Lube Trucks	50	50	50	50	50	50	50	50	50	50	50	50	50	50	50	50	50	50	50	50	50	50	50	50	50	50	0	26875	gasoline		
Off-Site HTF Delivery Trucks (From Rail Facility)	50	0	0	0	0	0	0	0	0	0	0	0	0	0	0	0	0	0	50	100	100	100	100	100	100	100	100	18275	diesel		
Off-Site Box Van Trucks	50	0	0	0	0	0	0	0	0	0	0	0	0	0	0	0	100	100	100	100	100	100	100	100	100	50	0	20425	diesel		
																											Total	1524350			

Off-Site Construction Workers Bussing Adjustments

Total		**173**	**244**	**321**	**411**	**680**	**862**	**898**	**948**	**968**	**998**	**1086**	**1081**	**1127**	**1149**	**1144**	**1139**	**1162**	**1155**	**1130**	**1069**	**1051**	**946**	**885**	**607**	**217**	**138**		
Solar Collector Array Facility (included in Total)					10	150	298	298	298	298	298	298	298	298	298	298	298	298	298	298	298	298	298	298	150			5674	people	
Supervisors/Management/Admin (included in Total)		8	24	35	45	65	75	75	75	75	85	85	85	85	85	85	85	85	80	75	75	75	55	55	55	30	15	1672	people	
Final Off-Site Construction Worker Commute (people, not vehicles)		**M1**	**M2**	**M3**	**M4**	**M5**	**M6**	**M7**	**M8**	**M9**	**M10**	**M11**	**M12**	**M13**	**M14**	**M15**	**M16**	**M17**	**M18**	**M19**	**M20**	**M21**	**M22**	**M23**	**M24**	**M25**	**M26**		
Day Shift - non Bussed		49	79	107	137	219	247	256	269	274	285	307	306	317	323	322	320	326	322	314	299	294	260	244	175	77	46	6173	people	
Day Shift - Bussed		124	165	215	275	461	575	602	640	655	668	734	730	765	781	777	774	791	790	776	731	717	657	612	403	140	92	14648	people	
Evening Shift - non Bussed							25	25	25	25	28	28	28	28	28	28	28	28	26	25	25	25	18	18	18			479	people	
Evening Shift - Bussed (if available)							15	15	15	15	17	17	17	17	17	17	17	17	16	15	15	15	11	11	11			290	people	
check cells		TRUE	TRUE	TRUE	TRUE	TRUE	TRUE	TRUE	TRUE	TRUE	TRUE	TRUE	TRUE	TRUE	TRUE	TRUE	TRUE	TRUE	TRUE	TRUE	TRUE	TRUE	TRUE	TRUE	TRUE	TRUE	TRUE		
* Maximum One-way haul distance (backhaul not included since trucks are not dedicated to site or project)																														
Day shift non-bussed total worker vehicles assuming 20% carpool		39	63	85	109	175	198	205	215	219	228	246	245	254	258	257	256	261	258	251	239	235	208	195	140	61	37			
Day shift total buses (roundtrips)		3	3	4	6	10	12	13	13	14	14	15	15	16	16	16	16	16	16	16	15	15	14	13	8	3	2	Total		
Evening shift total worker vehicles assuming no bussing and 20% carpool		0	0	0	0	0	32	32	32	32	36	36	36	36	36	36	36	36	34	32	32	32	23	23	23	0	0	Trips	Total VMT	
Total Vehicle Trips (non-bussed) per month		847	1359	1832	2348	3763	4932	5087	5302	5388	5680	6059	6037	6235	6330	6308	6287	6386	6274	6085	5822	5745	4967	4704	3509	1320	787	119390	7163370	
Total Bussed Vehicles Trips per month		55	74	96	123	207	258	270	287	293	299	329	327	342	350	348	346	354	354	348	327	321	294	274	181	63	41	6561	393658	

Max workers per month (assume pre day is same value):	1162	
Avg workers per month (assume pre day is same value):	830	
Assume all trips for worker commute are from Barstow:	60	miles roundtrip

(1) delivery trips from BNSF Barstow and urban area
(2) commute trips from Barstow urban area or commute staging area
(3) delivery trips only one way as non-dedicated to site
(4) commute trip distance is roundtrip
(5) assume bus capacity is 48 people
(6) assume evening shift is all non-bussed

FIXED ROOF TANK EMISSION CALCULATION

Reference: AP-42, Section 7.1, 9/97

	Emissions Scenario				
	X	: PTE			
***** Input *****		: Actual			
Number of Similar Tanks:	1		Year:	Any	
Stored Substance ID:	Diesel Fuel		Tank Cap.	2000	gallons
Tank ID:	Tank 1		Kn =	70.175	* Eq 41
Vapor Molecular Wt.:	130	Table 6*			
Vapor Pressure (psia):	0.00648	Table 6*			
Tank Diameter (ft):	6				
Tank Height/Length (ft):	9.5				
Avg. Vapor Space Height (ft):	4				
Avg. Diurnal Temp Change (degF):	28	Table 4 (Phoenix data used to simulate site)*			
Paint Factor:	1				
Small Tank Adj. Factor:	1				
Product Factor:	1	* Section 19.1.2.2.3.3			
Turnover Factor:	0.59				
Throughput (gals/yr):	25000				

Intermediate Calculations

TP =	25.00
Q =	0.01
D =	22.19
H =	2.03
T =	5.29

***** Output *****	Single Tank	All Tanks
Uncontrolled Emissions		
Breathing Loss (lb/yr):	3.66	3.66
Working Loss (lb/yr):	0.30	0.30
Total VOC Losses (lb/yr):	3.96	3.96
Controlled Emissions		
Control System Eff. (frac):	0	0
Total VOC Losses (lb/yr):	3.96	3.96
(lb/day):	0.0108	0.0108
(lb/hr):	0.0005	0.0005
(TPY):	0.0020	0.0020

Additional References: *API Bulletin #2518, October 1991
TTECI-2007

GASOLINE TANK EMISSION CALCULATION

Reference: AP-42, Section 5.2, 6/08

***** Input ***** Facility Type/ID: Facility Tank

Program is Applicable to All Grades/Types of Gasoline

UNDERGROUND TANK FILLING	lb/1000 gal *	Table 5.2-7 Values
Balanced Submerged Filling:	0.3	Phase 1 Varec
Submerged Filling:	0	
Splash Filling:	0	
Tank Breathing:	1	
Spillage:	0.7	
VEHICLE REFUELING		
Controlled:	0	
Uncontrolled:	11	
Tank Throughput (gals/yr):	18000	
Intermediate Calculations		
TP =	18	
EF =	13	

***** Output *****

Total VOC Losses (lb/yr):	234
(lb/day):	0.64
(lb/hr):	0.027
(TPY):	0.117

* Enter 0 for any category which is not applicable.

Operations Vehicle Emisisons from Site Deliveries

Operations Site Delivery Emissions		
Deliveries per Avg Month:	38	
Per trip delivery VMT:	50	
Total monthly VMT:	1900	
Total annual VMT:	22800	
Fraction annual VMT (gas	0.5	
Fraction annual VMT (die:	0.5	Daily VMT*
Annual gasoline VMT:	11400	44
Annual diesel VMT:	11400	44

*Daily VMT based on 260 days/year.

Emissions Factors (lbs/vmt)							
NOx	CO	VOC	SOx	PM10	CO2		
0.03422	0.009532	0.002411	0.00004	0.001556	4.04823	Diesel	
0.00202	0.01296	0.001125	0.000015	0.000098	1.4488	MD Gas	
Max Daily Emissions (lbs)							
NOx	**CO**	**VOC**	**SOx**	**PM10**	**CO2**	**PM2.5**	
1.5004	0.4179	0.1057	0.0018	0.0682	177.4993	0.0676	Diesel
0.0886	0.5682	0.0493	0.0007	0.0043	63.5243	0.0043	MD Gas
Tons per Const Period							
0.1951	0.0543	0.0137	0.0002	0.0089	23.0749	0.0088	Diesel
0.0115	0.0739	0.0064	0.0001	0.0006	8.2582	0.0006	MD Gas

Ref: MDAB, Emfac 2007, V2.3, Nov 2006
LDPs (gas and diesel), 1966-2010

HTF System Component Count and Fugitve Emissions Estimate
Mohave Solar Project

Component	Count #	Service	EF lb/hr/src	Hrs/day	lbs/hr	lbs/day	lbs/yr	tons/yr
Valves								
Sealed Bellows	0	Gas/Vapor & Lt. Liquid	0	0	0.000	0.000	0.000	0.000
	0	Fuel/N.Gas	0	0	0.000	0.000	0.000	0.000
AQMD Approved I&M	0	Gas Vapor	0	0	0.000	0.000	0.000	0.000
	3247	Lt. Liquid	0.0002517	16	0.817	13.076	4772.856	2.386
	0	Hvy. Liquid	0	0	0.000	0.000	0.000	0.000
Pumps								
Sealess Type	0	Lt. Liquid	0	0	0.000	0.000	0.000	0.000
Double Mech Seals or Equivalent	24	Lt. Liquid	0.0008448	16	0.020	0.324	118.407	0.059
Single Mech Seal	0	Hvy. Liquid	0	0	0.000	0.000	0.000	0.000
Compressors	0	Gas/Vapor	0	0	0.000	0.000	0.000	0.000
Flanges/Connectors	1550	All	0.0000165	16	0.026	0.409	149.358	0.075
PRVs	16	Gas	0.098546	8	1.577	12.614	4604.069	2.302
Process Drains	0	All	0	0	0.000	0.000	0.000	0.000
Open-ended Lines	0	Lt. Liquid	0.003307	0	0.000	0.000	0.000	0.000
				Totals	2.44	26.42	9644.69	4.82
Operating Days/Yr:	365							

Decomposition By Products:

Comment	CAS #	Substance ID	% wt of Total VOC	Fraction of VOC, wt	lbs/hr	lbs/day	lbs/yr	tons/yr
MSDS Trace Amount		Benzene	5	0.05	0.122	1.321	482.235	0.241
MSDS Trace Amount		Phenol	5	0.05	0.122	1.321	482.235	0.241
HTF Composition Value		Biphenyl	26.5	0.265	0.647	7.002	2555.843	1.278
			0	0	0.000	0.000	0.000	0.000
		***	0	0	0.000	0.000	0.000	0.000

Notes:
(1) VOC BACT for component system is I&M program. Leaks not to exceed 100 ppmv for all components.
(2) VOC BACT is accepted as achieved in practice.
(3) Ref: Kern County APCD, Engineering Analysis, Beacon Hill Solar Project, Project No. 090717, DOC 0369004A.
(4) CEC, FSA, Beacon Hill Solar, August 2009, 08-AFC-2, CEC-700-2009-005-FSA.
(5) Decomposition data from HTF manufacturer and related MSDS.
(6) All drains, vents, and inline relief valves are capped and they are included as "connectors".
(7) In line relief valves relieve light liquid from high pressure to successively lower pressures.
(8) The only relief valves to atmosphere are from Nitrogen blanketed vapor space (gas) on tanks and cleaning system.

Table C.5-7 Offsite Equipment and Manpower Schedules
Offsite Construction Vehicles

VEHICLE TYPE	HP	Fuel Type	Load Factor (%)	USAGE DESCRIPTION
Off-Site Flat Bed Trucks (From Rail Facility)	200	gasoline		Material Hauling
Off-Site Asphalt Trucks	200	diesel		Asphalt Hauling
Off-Site Concrete Trucks	310	diesel		Concrete Delivery
Off-Site Construction Worker Commute	180	gasoline		Personal vehicle (see commute table below)
Off-Site Dump Trucks	275	diesel		Material Hauling
Off-Site Low Boy Trucks (From Rail Facility)	250	diesel		Material Hauling
Off-Site Pickup Trucks	200	gasoline		Light duty material hauling
Off-Site Pipe Hauling Trucks (From Rail Facility)	250	diesel		Piping material hauling
Off-Site Water Trucks	250	diesel		Dust suppression water
Off-Site Fuel/Lube Trucks	200	gasoline		Mobile fuel & lubrication services
Off-Site HTF Delivery Trucks (From Rail Facility)	250	diesel		Delivery of HTF (transfer from rail yard)
Off-Site Box Van Trucks	200	diesel		Material Hauling (Small items / Dry Requirement Items)

Note: Use separate sheet (Site Construction Equipment) for on-site vehicles

Average Vehicle Miles Traveled per Day and Number of Vehicles

VEHICLE TYPE	Mi./ Veh.-Day*	Number M1	M2	M3	M4	M5	M6	M7	M8	M9	M10	M11	M12	M13	M14	M15	M16	M17	M18	M19	M20	M21	M22	M23	M24	M25	M26				
Off-Site Flat Bed Trucks (From Rail Facility)	50	1	2	2	2	2	2	2	2	2	2	2	2	2	2	2	2	2	3	3	3	3	3	3	3	2	2				
Off-Site Asphalt Trucks	50	0	0	0	0	0	0	0	0	0	0	0	0	0	0	0	0	0	0	0	0	0	3	3	3	3	2				
Off-Site Concrete Trucks	50	1	12	46	46	55	55	55	55	55	55	55	55	55	55	55	55	55	55	55	55	46	46	46	37	14	4				
Off-Site Dump Trucks	50	1	1	1	1	0	0	0	0	0	0	0	0	0	0	0	0	0	0	0	0	0	0	0	0	0	0				
Off-Site Low Boy Trucks (From Rail Facility)	50	1	1	1	2	2	2	2	2	2	2	2	2	2	2	2	2	2	2	2	2	2	2	2	2	1	1				
Off-Site Pickup Trucks	50	0	0	0	0	0	0	0	0	0	0	0	0	0	0	0	0	0	0	0	0	1	1	1	1	1	0				
Off-Site Pipe Hauling Trucks (From Rail Facility)	50	0	0	0	0	0	0	0	0	0	3	4	5	5	5	5	5	5	5	4	2	0	0	0	0	0	0				
Off-Site Water Trucks	50	1	1	1	0	0	0	0	0	0	0	0	0	0	0	0	0	0	0	0	0	0	0	0	0	0	0				
Off-Site Fuel/Lube Trucks	50	1	1	1	1	1	1	1	1	1	1	1	1	1	1	1	1	1	1	1	1	1	1	1	1	1	0				
Off-Site HTF Delivery Trucks (From Rail Facility)	50	0	0	0	0	0	0	0	0	0	0	0	0	0	0	0	0	0	1	2	2	2	2	2	2	2	2				
Off-Site Box Van Trucks	50	0	0	0	0	0	0	0	0	0	0	0	0	0	0	0	2	2	2	2	2	2	2	2	2	1	0				
Daily Mileage Accumulation																															
VEHICLE TYPE	Mi./ Veh.-Day*	Vehicle-Miles-Traveled (mi/day) M1	M2	M3	M4	M5	M6	M7	M8	M9	M10	M11	M12	M13	M14	M15	M16	M17	M18	M19	M20	M21	M22	M23	M24	M25	M26	VMT		Const Period Delivery data diesel VMT	gasoline VMT
Off-Site Flat Bed Trucks (From Rail Facility)	50	50	100	100	100	100	100	100	100	100	100	100	100	100	100	100	100	100	150	150	150	150	150	150	150	100	100	62350	gasoline	**1429750**	**94600**
Off-Site Asphalt Trucks	50	0	0	0	0	0	0	0	0	0	0	0	0	0	0	0	0	0	0	0	0	0	150	150	150	150	100	15050	diesel		
Off-Site Concrete Trucks	50	50	600	2,300	2,300	2,750	2,750	2,750	2,750	2,750	2,750	2,750	2,750	2,750	2,750	2,750	2,750	2,750	2,750	2,750	2,750	2,300	2,300	2,300	1,850	700	200	1266350	diesel		
Off-Site Dump Trucks	50	50	50	50	50	0	0	0	0	0	0	0	0	0	0	0	0	0	0	0	0	0	0	0	0	0	0	4300	diesel		
Off-Site Low Boy Trucks (From Rail Facility)	50	50	50	50	100	100	100	100	100	100	100	100	100	100	100	100	100	100	100	100	100	100	100	100	100	50	50	50525	diesel		
Off-Site Pickup Trucks	50	0	0	0	0	0	0	0	0	0	0	0	0	0	0	0	0	0	0	0	0	50	50	50	50	50	0	5375	gasoline		
Off-Site Pipe Hauling Trucks (From Rail Facility)	50	0	0	0	0	0	0	0	0	0	150	200	250	250	250	250	250	250	250	200	100	0	0	0	0	0	0	51600	diesel		
Off-Site Water Trucks	50	50	50	50	0	0	0	0	0	0	0	0	0	0	0	0	0	0	0	0	0	0	0	0	0	0	0	3225	diesel		
Off-Site Fuel/Lube Trucks	50	50	50	50	50	50	50	50	50	50	50	50	50	50	50	50	50	50	50	50	50	50	50	50	50	50	0	26875	gasoline		
Off-Site HTF Delivery Trucks (From Rail Facility)	50	0	0	0	0	0	0	0	0	0	0	0	0	0	0	0	0	0	50	100	100	100	100	100	100	100	100	18275	diesel		
Off-Site Box Van Trucks	50	0	0	0	0	0	0	0	0	0	0	0	0	0	0	0	100	100	100	100	100	100	100	100	100	50	0	20425	diesel		
																											Total	1524350			
Off-Site Construction Workers Bussing Adjustments																															
Total		**173**	**244**	**321**	**411**	**680**	**862**	**898**	**948**	**968**	**998**	**1086**	**1081**	**1127**	**1149**	**1144**	**1139**	**1162**	**1155**	**1130**	**1069**	**1051**	**946**	**885**	**607**	**217**	**138**				
Solar Collector Array Facility (included in Total)					10	150	298	298	298	298	298	298	298	298	298	298	298	298	298	298	298	298	298	298	150			5674	people		
Supervisors/Management/Admin (included in Total)		8	24	35	45	65	75	75	75	75	85	85	85	85	85	85	85	85	80	75	75	75	55	55	55	30	15	1672	people		
Final Off-Site Construction Worker Commute (people, not vehicles)		**M1**	**M2**	**M3**	**M4**	**M5**	**M6**	**M7**	**M8**	**M9**	**M10**	**M11**	**M12**	**M13**	**M14**	**M15**	**M16**	**M17**	**M18**	**M19**	**M20**	**M21**	**M22**	**M23**	**M24**	**M25**	**M26**				
Day Shift - non Bussed		49	79	107	137	219	247	256	269	274	285	307	306	317	323	322	320	326	322	314	299	294	260	244	175	77	46	6173	people		
Day Shift - Bussed		124	165	215	275	461	575	602	640	655	668	734	730	765	781	777	774	791	790	776	731	717	657	612	403	140	92	14648	people		
Evening Shift - non Bussed							25	25	25	25	28	28	28	28	28	28	28	28	26	25	25	25	18	18	18			479	people		
Evening Shift - Bussed (if available)							15	15	15	15	17	17	17	17	17	17	17	17	16	15	15	15	11	11	11			290	people		
check cells		TRUE	TRUE	TRUE	TRUE	TRUE	TRUE	TRUE	TRUE	TRUE	TRUE	TRUE	TRUE	TRUE	TRUE	TRUE	TRUE	TRUE	TRUE	TRUE	TRUE	TRUE	TRUE	TRUE	TRUE	TRUE	TRUE				
* Maximum One-way haul distance (backhaul not included since trucks are not dedicated to site or project)																															
Day shift non-bussed total worker vehicles assuming 20% carpool		39	63	85	109	175	198	205	215	219	228	246	245	254	258	257	256	261	258	251	239	235	208	195	140	61	37				
Day shift total buses (roundtrips)		3	3	4	6	10	12	13	13	14	14	15	15	16	16	16	16	16	16	16	15	15	14	13	8	3	2	Total			
Evening shift total worker vehicles assuming no bussing and 20% carpool		0	0	0	0	0	32	32	32	32	36	36	36	36	36	36	36	36	34	32	32	32	23	23	23	0	0	Trips	Total VMT		
Total Vehicle Trips (non-bussed) per month		847	1359	1832	2348	3763	4932	5087	5302	5388	5680	6059	6037	6235	6330	6308	6287	6386	6274	6085	5822	5745	4967	4704	3509	1320	787	119390	7163370		
Total Bussed Vehicles Trips per month		55	74	96	123	207	258	270	287	293	299	329	327	342	350	348	346	354	354	348	327	321	294	274	181	63	41	6561	393658		

Max workers per month (assume pre day is same value):	1162	
Avg workers per month (assume pre day is same value):	830	
Assume all trips for worker commute are from Barstow:	60	miles roundtrip

(1) delivery trips from BNSF Barstow and urban area
(2) commute trips from Barstow urban area or commute staging area
(3) delivery trips only one way as non-dedicated to site
(4) commute trip distance is roundtrip
(5) assume bus capacity is 48 people
(6) assume evening shift is all non-bussed

Table C.5-6
Estimated Construction Equipment Identification and Use Rates

EQUIPMENT DESCRIPTION			HP	FUEL TYPE	USAGE DESCRIPTION	
SITE GRADING						
TRUCK	PICKUP	.5 TONS- 4 X 2	190	Gas	Grading Supervisors / Grade Checkers	(1) Superintendent or (1) Grade Checker
TRUCK	FUEL/LUBE	6 Tons - 4X2	223	Diesel	Fueling / Maintenance of Grading Equipment	(1) Mechanic's Helper
TRUCK	PICKUP	1.0 TONS- 4 X 4	190	Diesel	Grading Maintenance/Mechanics	(1) Mechanic and (1) Mechanic's Helper
14 M MOTOR GRADER	GRADING EQUIPMENT	47,133 LB	174	Diesel	Earth Moving	(1) Heavy Equipment Operator
623G SCRAPER	GRADING EQUIPMENT	23 CY	313	Diesel	Earth Moving	(1) Heavy Equipment Operator
657G SCRAPER	GRADING EQUIPMENT	44 CY	313	Diesel	Earth Moving	(1) Heavy Equipment Operator
825 H COMPACTOR	GRADING EQUIPMENT	72,164 LB	114	Diesel	Earth Moving	(1) Heavy Equipment Operator
631 WATER PULL (10K)	GRADING EQUIPMENT	10,000 GALLON	223	Diesel	Earth Moving	(1) Heavy Equipment Operator
D6 DOZERS	GRADING EQUIPMENT	44,418 LB	144	Diesel	Earth Moving	(1) Heavy Equipment Operator
414E INDUSTRIAL LOADER	GRADING EQUIPMENT	1 CY	89	Diesel	Site clean-up / Maintenance	(1) Heavy Equipment Operator
WATER TRUCK	GRADING EQUIPMENT	4,000 GALLON	223	Diesel	Site clean-up / Maintenance	(1) Heavy Equipment Operator
TRUCK	DUMP TRUCK	6 CY	223	Diesel	Site clean-up / Maintenance	(1) Heavy Equipment Operator
POWER BLOCK AND HTF AREA						
AUTO	CAR 4-DOOR	STANDARD	190	Gas	Administrative and personnel vehicle for site usage	
TRUCK	PICKUP	.5 TONS- 4 X 2	190	Gas	General construction usage vehicle	
TRUCK	PICKUP	.75 TONS- 4 X 2	190	Gas	General construction usage vehicle	
TRUCK	PICKUP	.75 TONS- 4 X 4	200	Diesel	General construction usage vehicle	
TRUCK	PICKUP - CREW CAB	.75 TONS- 4 X 4	200	Diesel	General construction usage vehicle	
TRUCK	PICKUP	1.0 TONS- 4 X 4	200	Diesel	General construction usage vehicle	
TRUCK	FLATBED	2 TONS- 4 X 2	200	Diesel	On-site material hauling	
TRUCK	FLATBED	6 TONS- 4 X 2	200	Diesel	On-site material hauling	
TRUCK	FLATBED	15 TONS- 4 X 2	200	Diesel	On-site material hauling	
TRUCK	FLATBED	30 TONS- 6 X 4	250	Diesel	On-site material hauling	
TRUCK	A-FRAME	4 X 4	200	Gas	On-site material hauling	
TRUCK	LUBE/GREASE		223	Diesel	Lube/grease truck for on-site construction vehicle maintenance	
TRUCK	CHERRY PICKER	NON-INSULATED	185	Diesel	Small crane for light duty lifting	
TRUCK	DUMP TRUCK	6 CY	223	Diesel	On-site material hauling	
TRUCK	DUMP TRUCK	12 CY	223	Diesel	On-site material hauling	
TRUCK	DUMP TRUCK	20 CY	223	Diesel	On-site material hauling	
TRACTOR	TRUCK TRACTOR	30 TONS 6X4	80	Diesel	Trailer pulling and general construction usage	
TRACTOR	TRUCK TRACTOR	60 TONS 6X4	80	Diesel	Trailer pulling and general construction usage	
TRACTOR	WHEEL, W/TOW HITCH	50 HP	80	Diesel	Trailer pulling and general construction usage	
CRANE	TELESCOPIC JIB, SELF	PROP. 5 TONS	185	Diesel	Small crane for light duty lifting	
CRANE	TELESCOPIC JIB, SELF	PROP. 10 TONS	185	Diesel	Small crane for light duty lifting	
CRANE	TELESCOPIC JIB, SELF	PROP. 15 TONS	185	Diesel	Small crane for light duty lifting	
CRANE	TELESCOPIC JIB	TRUCK - 20 TONS	191	Diesel	Small crane for medium duty lifting	
CRANE	TELESCOPIC JIB	TRUCK - 25 TONS	191	Diesel	Small crane for medium duty lifting	
CRANE	TELESCOPIC JIB	TRUCK - 30 TONS	191	Diesel	Small crane for medium duty lifting	
CRANE	TELESCOPIC JIB	TRUCK - 70 TONS	191	Diesel	Small crane for medium duty lifting	
CRANE	FIXED JIB, CRAWLER	20 TONS	191	Diesel	Small crane for medium duty lifting	
CRANE	FIXED JIB, CRAWLER	30 TONS	191	Diesel	Small crane for medium duty lifting	
CRANE	FIXED JIB, CRAWLER	40 TONS	191	Diesel	Small crane for medium duty lifting	
CRANE	FIXED JIB, CRAWLER	120 TONS	191	Diesel	Small crane for medium duty lifting	
CRANE	FIXED JIB, CRAWLER	165 TONS	250	Diesel	Large crane for heavy duty lifting	
CRANE	FIXED JIB, CRAWLER	400 TONS	350	Diesel	Large crane for heavy duty lifting	
PILING	DRILLING FRAME	AUGER	218	Diesel	Drilling machine for pier foundations	
PILING	DRILLING FRAME	AUGER	218	Diesel	Drilling machine for pier foundations	
COMPRESSOR	DIESEL(ROTARY SCREW)	250 CFM	37	Diesel	Air compressor for pneumatic construction tools and equipment	
COMPRESSOR	DIESEL(ROTARY SCREW)	365 CFM	37	Diesel	Air compressor for pneumatic construction tools and equipment	
COMPRESSOR	DIESEL(ROTARY SCREW)	600 CFM	37	Diesel	Air compressor for pneumatic construction tools and equipment	
CONCRETE	CONCRETE MIXER	6 SACK	223	Diesel	Concrete mixer for small foundations and supports	
CONCRETE	CONCRETE MIXER	16 SACK (1 CY)	223	Diesel	Concrete mixer for small foundations and supports	
CONCRETE	VIBRATOR GASOLINE	2.4 HP,2 IN HEAD	2.4	Gas	Small area compaction	
CONCRETE	POWER TROWEL,4 BLADE	36 IN DIA	5	Gas	Concrete finishing tool	
CONCRETE	SITE DUMPER	.75 CY, DIESEL	5	Diesel	On-site material hauling	
WELDING EQUIPMENT	PORTABLE DIESEL	300 AMPERES	25	Diesel	Welding equipment	
WELDING EQUIPMENT	PORTABLE DIESEL	400 AMPERES	25	Diesel	Welding equipment	
PIPING EQUIPMENT	CUTTING & BEVELLING	1 - 4 INCHES	10	Diesel	Pipe fitting and preparation	
PIPING EQUIPMENT	CUTTING & BEVELLING	6 - 20 INCHES	10	Diesel	Pipe fitting and preparation	
PIPING EQUIPMENT	CUTTING & BEVELLING	22 - 30 INCHES	15	Diesel	Pipe fitting and preparation	
PUMP	DIAPHRAGM	4 INCHES SUCTION	10	Gas	Small pump for sumps and general construction usage	
ELECTRIC EQUIP/TOOL	GENERATOR SET	10 KW	50	Gas	Small generator for construction tools	
ASPHALT EQUIPMENT	PAVER/FINISHER	10 FEET WIDE	100	Diesel	Pavement finishing	
ASPHALT EQUIPMENT	SPREADER TRAILER,GAS	2000 GAL, SPRAY	100	Gas	Pavement spreading	

ID #	Category for Main Sheet Calcs
1	Bore/Drill Rigs/Pile Drivers
2	Cement Mixers
3	Industrial/Concrete Saws
4	Cranes
5	Crawler Tractors/Dozers
6	Crushing/Processing Eq.
7	Dump and Tender Trucks
8	Excavators
9	Forklifts/Aerial Lifts/Booms
10	Generators/Compressors
11	Graders
12	Off Highway Tractors
13	Off Highway Trucks
14	Other Const. Eq.-Diesel
15	Pavers
16	Paving Eq./Surfacing Eq.
17	Plate Compactors
18	Rollers/Compactors
19	Rough Terrain Forklifts
20	Rubber Tired Dozers
21	Rubber Tired Loaders
22	Scrapers
23	Signal Boards/Light Sets
24	Skid Steer Loaders
25	Tractors/Loaders/Backhoes
26	Trenchers
27	Welders
28	Other Const. Eq.-Gasoline

	SOLAR FIELD				
AUTO	CAR 4-DOOR	STANDARD	190	Gas	Administrative and personnel vehicle for site usage
TRUCK	PICKUP	.75 TONS- 4 X 2	190	Gas	General construction usage vehicle
TRUCK	PICKUP	.75 TONS- 4 X 4	200	Diesel	General construction usage vehicle
TRUCK	PICKUP - CREW CAB	.75 TONS- 4 X 4	200	Diesel	General construction usage vehicle
TRUCK	FLATBED	2 TONS- 4 X 2	200	Gas	On-site material hauling
TRUCK	FLATBED	6 TONS- 4 X 2	200	Diesel	On-site material hauling
TRUCK	FLATBED	15 TONS- 4 X 2	200	Diesel	On-site material hauling
TRUCK	A-FRAME	4 X 4	200	Gas	On-site material hauling
TRUCK	CHERRY PICKER	NON-INSULATED	185	Diesel	Small crane for light duty lifting
TRUCK	DUMP TRUCK	6 CY	223	Diesel	On-site material hauling
TRUCK	DUMP TRUCK	12 CY	223	Diesel	On-site material hauling
TRUCK	DUMP TRUCK	20 CY	223	Diesel	On-site material hauling
TRACTOR	TRUCK TRACTOR	30 TONS 6X4	80	Diesel	Trailer pulling and general construction usage
TRACTOR	TRUCK TRACTOR	60 TONS 6X4	80	Diesel	Trailer pulling and general construction usage
TRACTOR	WHEEL, W/TOW HITCH	50 HP	80	Diesel	Trailer pulling and general construction usage
CRANE	TELESCOPIC JIB, SELF	PROP. 15 TONS	185	Diesel	Small crane for light duty lifting
CRANE	TELESCOPIC JIB	TRUCK - 20 TONS	191	Diesel	Small crane for medium duty lifting
CRANE	TELESCOPIC JIB	TRUCK - 25 TONS	191	Diesel	Small crane for medium duty lifting
CRANE	TELESCOPIC JIB	TRUCK - 50 TONS	191	Diesel	Small crane for medium duty lifting
CRANE	FIXED JIB	TRUCK - 60 TONS	191	Diesel	Small crane for medium duty lifting
CRANE	FIXED JIB, CRAWLER	20 TONS	191	Diesel	Small crane for medium duty lifting
COMPRESSOR	DIESEL(ROTARY SCREW)	250 CFM	80	Diesel	Air compressor for pneumatic construction tools and equipment
COMPRESSOR	DIESEL(ROTARY SCREW)	365 CFM	80	Diesel	Air compressor for pneumatic construction tools and equipment
COMPRESSOR	DIESEL(ROTARY SCREW)	600 CFM	80	Diesel	Air compressor for pneumatic construction tools and equipment
CONCRETE	CONCRETE MIXER	6 SACK	223	Diesel	Concrete mixer for small foundations and supports
CONCRETE	CONCRETE MIXER	16 SACK (1 CY)	223	Diesel	Concrete mixer for small foundations and supports
CONCRETE	VIBRATOR GASOLINE	2.4 HP,2 IN HEAD	2.4	Gas	Small area compaction
CONCRETE	POWER TROWEL,4 BLADE	36 IN DIA	5	Gas	Concrete finishing tool
CONCRETE	SITE DUMPER	.75 CY, DIESEL	5	Diesel	On-site material hauling
WELDING EQUIPMENT	PORTABLE GASOLINE	200 AMPERES	25	Gas	Welding equipment
WELDING EQUIPMENT	PORTABLE DIESEL	400 AMPERES	25	Diesel	Welding equipment
PIPING EQUIPMENT	CUTTING & BEVELLING	6 - 20 INCHES	10	Diesel	Pipe fitting and preparation
PUMP	DIAPHRAGM	4 INCHES SUCTION	10	Gas	Small pump for sumps and general construction usage
ELECTRIC EQUIP/TOOL	GENERATOR SET	10 KW	50	Gas	Small generator for construction tools
ASPHALT EQUIPMENT	PAVER/FINISHER	10 FEET WIDE	100	Diesel	Pavement finishing

Equipment Usage On-Site by Month

EQUIPMENT DESCRIPTION			Hours/Day*	Number Used Each Month														
				M1	M2	M3	M4	M5	M6	M7	M8	M9	M10	M11	M12	M13	M14	M15
SITE GRADING																		
TRUCK	PICKUP	.5 TONS- 4 X 2	10	6	6	6	6	6	6									
TRUCK	FUEL/LUBE	6 Tons - 4X2	10	4	4	4	4	4	4									
TRUCK	PICKUP	1.0 TONS- 4 X 4	10	3	3	3	3	3	3									
14 M MOTOR GRADER	GRADING EQUIPMENT	47,133 LB	10	6	6	6	6	6	6									
623G SCRAPER	GRADING EQUIPMENT	23 CY	10	32	32	32	32	32	32									
657G SCRAPER	GRADING EQUIPMENT	44 CY	10	5	5	5	5	5	5									
825 H COMPACTOR	GRADING EQUIPMENT	72,164 LB	10	3	3	3	3	3	3									
631 WATER PULL (10K)	GRADING EQUIPMENT	10,000 GALLON	10	6	6	6	6	6	6									
D6 DOZERS	GRADING EQUIPMENT	44,418 LB	10	3	3	3	3	3	3									
414E INDUSTRIAL LOADER	GRADING EQUIPMENT	1 CY	10							1	1	1	1	1	1	1	1	1
WATER TRUCK	GRADING EQUIPMENT	4,000 GALLON	10							1	1	1	1	1	1	1	1	1
TRUCK	DUMP TRUCK	6 CY	10							1	1	1	1	1	1	1	1	1
Monthly Equipment Onsite,#				**68**	**68**	**68**	**68**	**68**	**68**	**3**	**3**	**3**	**3**	**3**	**3**	**3**	**3**	**3**
POWER BLOCK & HTF AREA																		

AUTO	CAR 4-DOOR	STANDARD	10					1	1	1	1	1	1	1	1	2	2	2
TRUCK	PICKUP	.5 TONS- 4 X 2	10					1	1	1	1	1						
TRUCK	PICKUP	.75 TONS- 4 X 2	10								1	2	4	6	8	10	12	12
TRUCK	PICKUP	.75 TONS- 4 X 4	10					2	2	4	6	8	12	12	12	12	12	12
TRUCK	PICKUP - CREW CAB	.75 TONS- 4 X 4	10															
TRUCK	PICKUP	1.0 TONS- 4 X 4	10								1	1	1	1	1	1	1	1
TRUCK	FLATBED	2 TONS- 4 X 2	10								1	1	1	1	1	1	1	1
TRUCK	FLATBED	6 TONS- 4 X 2	10							1	1	1	1	1	1	1	1	1
TRUCK	FLATBED	15 TONS- 4 X 2	10															1
TRUCK	FLATBED	30 TONS- 6 X 4	10															
TRUCK	A-FRAME	4 X 4	10					2	4	4	4	4	4	4	4	4	4	4
TRUCK	LUBE/GREASE		10															
TRUCK	CHERRY PICKER	NON-INSULATED	10															
TRUCK	DUMP TRUCK	6 CY	10															
TRUCK	DUMP TRUCK	12 CY	10											1	1	1	1	1
TRUCK	DUMP TRUCK	20 CY	10							1	1	1	1	1				
TRACTOR	TRUCK TRACTOR	30 TONS 6X4	10					1	1	1								
TRACTOR	TRUCK TRACTOR	60 TONS 6X4	10							1	1	1						
TRACTOR	WHEEL, W/TOW HITCH	50 HP	10					3	4	6	6	6	6	8	8	8	8	8
CRANE	TELESCOPIC JIB, SELF	PROP. 5 TONS	10							1	1	1	1	1				
CRANE	TELESCOPIC JIB, SELF	PROP. 10 TONS	10												1	1	1	1
CRANE	TELESCOPIC JIB, SELF	PROP. 15 TONS	10					1	1	3	4	6	6	8	8	8	8	8
CRANE	TELESCOPIC JIB	TRUCK - 20 TONS	10						2	4	6	8	8	8	8	8	8	8
CRANE	TELESCOPIC JIB	TRUCK - 25 TONS	10				2	2	2	2	2	2	2	2	2	2	2	2
CRANE	TELESCOPIC JIB	TRUCK - 30 TONS	10				1											
CRANE	TELESCOPIC JIB	TRUCK - 70 TONS	10					1	1	1	1	2	2	2	2	2	2	2
CRANE	FIXED JIB, CRAWLER	20 TONS	10															
CRANE	FIXED JIB, CRAWLER	30 TONS	10															
CRANE	FIXED JIB, CRAWLER	40 TONS	10															
CRANE	FIXED JIB, CRAWLER	120 TONS	10															
CRANE	FIXED JIB, CRAWLER	165 TONS	10															
CRANE	FIXED JIB, CRAWLER	400 TONS	10															
PILING	DRILLING FRAME	AUGER	10				1											
PILING	DRILLING FRAME	AUGER	10					1	1	1								
COMPRESSOR	DIESEL(ROTARY SCREW)	250 CFM	10					1										
COMPRESSOR	DIESEL(ROTARY SCREW)	365 CFM	10					1	1	1	1	1	1	1	1	1	1	1
COMPRESSOR	DIESEL(ROTARY SCREW)	600 CFM	10							1	1	2	2	2	2	4	4	4
CONCRETE	CONCRETE MIXER	6 SACK	10				1											
CONCRETE	CONCRETE MIXER	16 SACK (1 CY)	10				2	4	4	4	4	4	4	4	4	4	4	4
CONCRETE	VIBRATOR GASOLINE	2.4 HP,2 IN HEAD	10					1	1	1								
CONCRETE	POWER TROWEL,4 BLADE	36 IN DIA	10					1	2	2	2	2	2	1	1	1	1	1
CONCRETE	SITE DUMPER	.75 CY, DIESEL	10					1	1	1	1	1	1	1	1	1	1	1
WELDING EQUIPMENT	PORTABLE DIESEL	300 AMPERES	10						1									
WELDING EQUIPMENT	PORTABLE DIESEL	400 AMPERES	10					2	8	20	20	20	22	22	22	22	22	22
PIPING EQUIPMENT	CUTTING & BEVELLING	1 - 4 INCHES	10															
PIPING EQUIPMENT	CUTTING & BEVELLING	6 - 20 INCHES	10															1
PIPING EQUIPMENT	CUTTING & BEVELLING	22 - 30 INCHES	10						1	1	1	1	1	1	1	1	1	1
PUMP	DIAPHRAGM	4 INCHES SUCTION	10				1	1	1	1	1	1	1	1	1	1	1	1
ELECTRIC EQUIP/TOOL	GENERATOR SET	10 KW	10			1	1	1	1	1	1	1	1	1	1	1	1	1
ASPHALT EQUIPMENT	PAVER/FINISHER	10 FEET WIDE	10															
ASPHALT EQUIPMENT	SPREADER TRAILER,GAS	2000 GAL, SPRAY	10															
	Monthly Equipment Onsite,#			**0**	**0**	**1**	**9**	**28**	**41**	**65**	**70**	**79**	**85**	**91**	**92**	**97**	**99**	**101**

	SOLAR FIELD		Hours/Day*															
AUTO	CAR 4-DOOR	STANDARD	20	1	1	1	1	1	1	1	1	1	1	2	2	2	2	2
TRUCK	PICKUP	.75 TONS- 4 X 2	20	3	5	5	7	10	10	10	10	10	10	10	10	10	10	10
TRUCK	PICKUP	.75 TONS- 4 X 4	20		5	5	10	10	10	10	10	10	10	10	10	10	10	10
TRUCK	PICKUP - CREW CAB	.75 TONS- 4 X 4	20											1	1	1	1	1
TRUCK	FLATBED	2 TONS- 4 X 2	20															
TRUCK	FLATBED	6 TONS- 4 X 2	20		1	1	1	1	1	1	1	1	1	1	1	1	1	2
TRUCK	FLATBED	15 TONS- 4 X 2	20															
TRUCK	A-FRAME	4 X 4	20	2	2	4	4	4	4	4	4	4	4	4	4	4	4	4
TRUCK	CHERRY PICKER	NON-INSULATED	20	1														
TRUCK	DUMP TRUCK	6 CY	20	1	1	1	1	1	1	1								
TRUCK	DUMP TRUCK	12 CY	20	1	1	1	1	1	1	1	1	1	1	2	2	2	2	2
TRUCK	DUMP TRUCK	20 CY	20			1	1	1										
TRACTOR	TRUCK TRACTOR	30 TONS 6X4	20															
TRACTOR	TRUCK TRACTOR	60 TONS 6X4	20															
TRACTOR	WHEEL, W/TOW HITCH	50 HP	20		4	8	12	16	16	16	16	16	16	16	16	16	16	16
CRANE	TELESCOPIC JIB, SELF	PROP. 15 TONS	20	2	2	2	2	2	4	4	6	8	8	8	8	8	8	8
CRANE	TELESCOPIC JIB	TRUCK - 20 TONS	20	2	4	5	5	10	10	10	10	10	10	10	10	10	10	10
CRANE	TELESCOPIC JIB	TRUCK - 25 TONS	20	1	1	1	1	1	1	1	1	1	1	1	1	1	1	1
CRANE	TELESCOPIC JIB	TRUCK - 50 TONS	20															
CRANE	FIXED JIB	TRUCK - 60 TONS	20															
CRANE	FIXED JIB, CRAWLER	20 TONS	20	1	1	1	1	1	1	1	2	2	2	2	2	3	3	3
COMPRESSOR	DIESEL(ROTARY SCREW)	250 CFM	20		1	1	1											
COMPRESSOR	DIESEL(ROTARY SCREW)	365 CFM	20	2	2	2	4	5	5	5	5	5	5	5	5	5	5	5
COMPRESSOR	DIESEL(ROTARY SCREW)	600 CFM	20									1	1	1	1	2	2	3
CONCRETE	CONCRETE MIXER	6 SACK	20	1	1	1	1	1	2	2	2	2	2	1	1	1	1	1
CONCRETE	CONCRETE MIXER	16 SACK (1 CY)	20	1	1	1	2	2	2	2	2	2	2	2	2	2	1	1
CONCRETE	VIBRATOR GASOLINE	2.4 HP,2 IN HEAD	20			1	1	1	1	1	1	1						
CONCRETE	POWER TROWEL,4 BLADE	36 IN DIA	20			1	1	1	1	1	1	1	1	1				
CONCRETE	SITE DUMPER	.75 CY, DIESEL	20	1	1	1	1	1	1	1	1	1	1	1	1	1		
WELDING EQUIPMENT	PORTABLE GASOLINE	200 AMPERES	20															
WELDING EQUIPMENT	PORTABLE DIESEL	400 AMPERES	20			10	25	25	25	25	25	25	25	25	25	25	25	25
PIPING EQUIPMENT	CUTTING & BEVELLING	6 - 20 INCHES	20										1	1	1	1	1	1
PUMP	DIAPHRAGM	4 INCHES SUCTION	20	1	1	1	1	1	1	1	1	1						
ELECTRIC EQUIP/TOOL	GENERATOR SET	10 KW	20						1	1	1	1						
ASPHALT EQUIPMENT	PAVER/FINISHER	10 FEET WIDE	20															
		Monthly Equipment Onsite,#		**21**	**35**	**55**	**84**	**96**	**99**	**99**	**101**	**104**	**102**	**104**	**103**	**105**	**103**	**105**
	Total Monthly Equipment Onsite All Phases: #			**89**	**103**	**124**	**161**	**192**	**208**	**167**	**174**	**186**	**190**	**198**	**198**	**205**	**205**	**209**

Avg to Max EQ Use Rates by Phase

	monthly avg # of EQ on site	monthly max # of EQ on site	ratio max/avg
Site grading/prep phase 1	68	68	1.00
Site grading/prep phase 2	3	3	1.00
Power block/HTF area phase	68	101	1.48
Solar field phase	89.5	107	1.20

Notes:
HP values are equipment category averages per Applicant or Sacramento County per Table C.5-5.

M16	M17	M18	M19	M20	M21	M22	M23	M24	M25	M26	Total Hp-Hrs	Eq Cat ID
											1470600	28
											1150680	14
											735300	14
											1346760	11
											12920640	11
											2018850	11
											441180	11
											1726020	11
											557280	11
1	1	1	1	1	1	1	1	1	1	1	382700	11
1	1	1	1	1	1	1	1	1	1	1	958900	11
1	1	1	1	1	1	1	1	1	1	1	958900	7
3	**3**	**3**	**3**	**3**	**3**	**3**	**3**	**3**	**3**	**3**	**24667810**	

2	2	2	2	2	2	2	1	1	1	1	1307200	28
											204250	28
12	12	12	12	10	10	8	8	6	4	3	6209200	28
12	12	12	12	12	12	8	8	8	5	4	8557000	14
		1	1	1	1	1	1	1	1		344000	14
1	1	1	1	1	1	1					645000	14
1	1	1	1	1	1	1	1				688000	14
1	1	1	1								559000	14
1	1	1	1	1							258000	13
							1				53750	13
4	4	4	4	4	4	4	4	4	3	2	3569000	28
		1									47945	7
					1	1	1	1			159100	9
			1	1	1	1	1	1			287670	7
1	1	1									383560	7
											239725	7
											51600	12
											51600	12
8	8	8	8	8	6	6	6	4	3	2	2373600	12
											198875	9
1											198875	9
8	8	8	8	8	8	8	8	7	4	4	5568500	9
8	8	8	8	8	8	8	8	8	6	4	6159750	4
2	2	2	2	2	2	2	2	2	2	2	1888990	4
											41065	4
2	1	1	1	1	1	1	1	1	1	1	1231950	4
1	1	1	1	1	1	1	1	1	1	1	451715	4
							1	1	1		123195	4
							1				41065	4
								1			41065	4
			1	1	1						161250	4
								1			75250	4
											46870	1
											140610	1
											7955	10
1	1	1	2	2	2	2	1	1	1	1	206830	10
4	4	4	4	4	4	4	2	2	2	2	461390	10
											47945	2
2	2										2397250	2
											1548	2
1	1	1									20425	2
1	1										13975	2
											5375	27
22	22	22	22	22	22	22	20	20	20	10	2289750	27
					1	1	1				6450	14
1	1	1	1	1	1	1	1	1	1		23650	14
1	1	1	1	1	1	1	1	1			61275	14
1	1	1	1								34400	28
1	1	1	1	1	1	1	1	1	1	1	258000	28
										1	21500	15
										1	21500	28
100	**98**	**97**	**97**	**93**	**92**	**85**	**81**	**74**	**57**	**40**	**48237443**	

2	2	2	2	2	2	2	2	2	2	1	3349700	28
10	10	10	10	10	10	10	10	8	8	4	18791000	28
10	10	10	10	10	10	10	10	10	10	7	20382000	14
1	1	1	1	1	1	1	1	1	1	1	1376000	14
1	1	1	1	1	1	1	1	1	1		860000	28
2	2	2	2	2	2	2	2	2	2	1	3096000	14
					1	1					172000	14
4	4	4	4	4	4	4	4	4	3	2	8342000	28
											79550	9
											671230	7
2	2	2	2	1	1	1	1	1	1	1	3356150	7
											287670	7
						1					34400	12
							1				34400	12
16	16	16	16	16	16	16	13	12	12	6	12212000	12
8	8	8	8	8	8	8	6	6	4	3	12330250	9
10	10	10	10	10	10	10	8	8	3	1	17740080	9
1	1	1	1	1	1	1	1	1	1	1	2135380	9
					1	1	1	1	1		410650	9
							1				82130	9
3	3	3	3	3	3	3	3	3	3	2	4763540	9
											103200	10
6	6	6	6	6	6	6	6	6	4	2	4300000	10
3	3	3	3	2	2	2	2	1	1	1	1169600	10
1											2013690	2
1											2493140	2
											7224	17
											19350	17
											27950	7
					1						10750	27
25	20	20	20	20	20	20	20	20	19	10	5633000	27
1	1	1	1	1	1	1	1	1	1		68800	14
											38700	28
											86000	28
									1	1	86000	15
107	**100**	**100**	**100**	**98**	**101**	**101**	**94**	**88**	**78**	**44**	**126563534**	
210	**201**	**200**	**200**	**194**	**196**	**189**	**178**	**165**	**138**	**87**	**199468787**	Total

Table 5.2-1. Estimated Fuel Use Summary for the Project

System	Units	Per Hour	Per Day	Per Year
Auxiliary Boiler (each)	MMscf	0.021	0.504	46.0
Fire Pump Engine (each)	gallons	≤3.8	≤3.8	~198
Emergency Generator (each)	gallons	≤86.7	≤86.7	~4506

Diesel fuel at 139,000 BTU/gal. See Appendix C.1 for specific information.

All engines (diesel emergency generators and fire pump engines) will only be tested for <30 minutes on any given day. Thus, engine fuel uses shown above are actual for ½-hour intervals.

Each boiler may be operated a maximum of 24 hours per day. Annual fuel use is based on 4380 hrs/yr at 50% load.

5.2.1.3 Climate and Meteorology

The proposed site west-northwest of Barstow, California, within the western portion of San Bernardino County, experiences the following climate and meteorology patterns.

The Mojave Desert Air Basin (MDAB) is an assemblage of mountain ranges interspersed with long broad valleys that often contain dry lakes. Many of the lower mountains which exist in this vast terrain rise from 1,000 to 4,000 feet above the valley floor. Prevailing winds in the MDAB are out of the west and southwest. These prevailing winds are due to the proximity of the MDAB to coastal and central regions and the blocking nature of the Sierra Nevada mountains to the north. Air masses pushed onshore in southern California by differential heating are channeled through the MDAB. The MDAB is separated from the southern California coastal and central California valley regions by mountains (highest elevation approximately 10,000 feet), whose passes form the main channels for these air masses. The Antelope Valley is bordered in the northwest by the Tehachapi Mountains, separated from the Sierra Nevada mountains in the north by the Tehachapi Pass (3,800 ft elevation). The Antelope Valley is bordered in the south by the San Gabriel Mountains, bisected by Soledad Canyon (3,300 ft). The Mojave Desert is bordered in the southwest by the San Bernardino Mountains, separated from the San Gabriels by the Cajon Pass (4,200 ft). A lesser channel lies between the San Bernardino Mountains and the Little San Bernardino Mountains (the Morongo Valley).

The Palo Verde Valley portion of the Mojave Desert lies in the low desert, at the eastern end of a series of valleys (notably the Coachella Valley) whose primary channel is the San Gorgonio Pass (2,300 ft) between the San Bernardino and San Jacinto Mountains.

During the summer, the MDAB is generally influenced by a Pacific Subtropical High cell that sits off the coast, inhibiting cloud formation and encouraging daytime solar heating. The MDAB is rarely influenced by cold air masses moving south from Canada and Alaska, as these frontal systems are weak and diffuse by the time the reach the desert. Most desert

moisture arrives from infrequent warm, moist and unstable air masses from the south. The MDAB averages between three and seven inches of precipitation per year (from 16 to 30 days with at least 0.01 inches of precipitation). The MDAB is classified as a dry-hot desert climate (BWh), with portions classified as dry-very hot desert (BWhh), to indicate at least three months have maximum average temperatures over 100.4° F.

The climatic pattern for the Project region is a typical desert climate within the Mediterranean climate classification. The warmest month for the region is typically July, with the coldest month being December. The month with the highest precipitation is usually February. The western Mojave Desert region experiences a large number of days each year with sunshine, generally 345+ days per year. The region also traditionally experiences excellent visibility, i.e., greater than 10 miles or more 95 percent of the time.

Representative climatic data for the Project area was derived from the Barstow Station (#040519), period of record 1/1/1903 to 3/31/1980. A summary of data from this site indicates the following:

- Average maximum daily temperature: 80.3°F
- Average minimum daily temperature: 47.5°F
- Highest mean maximum annual temperature: 78.3°F
- Lowest mean minimum annual temperature: 45.6°F
- Mean annual precipitation: 16.78 inches (in.)
- Highest recorded temperature: 115 °F (1995)
- Lowest recorded temperature: 12 °F (1996)

Air quality is determined primarily by the type and amount of pollutants emitted into the atmosphere, the nature of the emitting source, the topography of the air basin, and the local meteorological conditions. In the Project area, inversions and light winds can result in conditions for pollutants to accumulate in the region.

The predominant winds in the Project area are shown in Figures 5.2-1 to 5.2-5. Winds in the Project region are generally westerly (southwest through northwest), with a very much less frequent component of easterly winds. The data displayed in Figures 5.2-2 through 5.2-5 are the quarterly wind roses for the Daggett Airport Automated Surface Observing System (ASOS) site for the 2001-2004 calendar years. Calm conditions occur approximately 7.62% of the time for the Daggett Airport ASOS instruments, with the annual average wind speed being 4.87 m/s. Statistical data for the annual patterns for the Daggett Airport ASOS site is summarized in Appendix C.2.

Based on discussions with the Mojave Desert Air Quality Management District (MDAQMD), meteorological data representative of the site (presented in Appendix C.2) can be derived from the Daggett Airport ASOS station. As discussed in detail later, Daggett Airport ASOS

surface data were combined with Desert Rock, Nevada radiosonde data for 2001-2004 using the AERMOD meteorological processing programs and guidance documents.

5.2.1.4 Regulatory Environment

Although a regulatory compliance analysis (LORS) is presented in Section 5.2.5, there are several MDAQMD regulations that directly affect the permitting and review process, such as the Determination of Compliance (DOC) for the proposed Project as follows:

- New Source Review (NSR) Regulation XIII Rule 1303 requires that Best Available Control Technology (BACT) be applied to:

  (1) Any new Permit Unit which emits, or has the Potential to Emit, 25 pounds per day or more of any Nonattainment Air Pollutant shall be equipped with BACT.

  (2) Any Modified Permit Unit which emits, or has the Potential to Emit, 25 pounds per day or more of any Nonattainment Air Pollutant shall be equipped with BACT.

  (3) Any new or Modified Facility which emits, or has the Potential to Emit, 25 tons per year or more of any Nonattainment Air Pollutant shall be equipped with BACT for each new Permit Unit.

- Per Regulation XIII Rule 1303, provide all required emissions mitigations prior to the commencement of construction of the source.

- Provide an impact analysis per Regulation XIII Rule 1302.

- Per Regulation XIII Rule 1302, demonstrate prior to the issuance of the Authority to Construct (ATC) that all major stationary sources owned or operated by the Applicant, which are subject to emissions limitations, are either in compliance or on a schedule for compliance with all applicable emissions limitations under the Clean Air Act (CAA).

In addition the following should be noted:

- The MDAQMD NSR rule (Regulation XIII) defines cargo carriers as trains, trucks and off-road vehicles dedicated to, or an integral part of, a specific facility.

- For purposes of calculating potential to emit, fugitive emissions from <u>operations</u> are not included unless the source is listed in one of the categories of sources per 40 CFR 51.165(a)(1)(iv)(C).

- For purposes of calculating potential to emit, <u>secondary emissions</u> from operations are not included in the sources PTE calculations.

As such, the operational emissions from fugitive sources and on-site dedicated vehicles are not included in the source's potential to emit calculations.

Appendix C

Air Quality & Public Health Supporting Documentation

APPENDIX C.1

Calculation of Maximum Hourly, Daily, and Annual Emissions

Tables presented in this Appendix are as follows:

C.1-1	Auxiliary Boilers #1 and #2 Emissions
C.1-2	Auxiliary Boilers #1 and #2 HAP Emissions
C.1-3	Emergency Generators #1 and #2 Emissions
C.1-4	Fire Pump Engines #1 and #2 Emissions
C.1-5	Cooling Towers #1 and #2 Emissions
C.1-6	Cooling Towers #1 and #2 HAP Emissions
C.1-7	Dedicated Site Vehicle Emissions

Also included in this appendix:

Attachment C.1-1	HTF Fugitive Venting and System Loss Emissions
Attachment C.1-2	Engine Specification Sheets
Attachment C.1-3	Auxiliary Boiler Specification Sheets
Attachment C.1-4	Cooling Tower Specification Sheets
Attachment C.1-5	Diesel Fuel Analysis Data
Attachment C.1-6	Natural Gas Fuel Analysis Data
Attachment C.1-7	HTF MSDS
Attachment C.1-8	Vehicle Use Rate and Growth Data (1980-2020)

Table C.1-1 Boilers #1 and #2
Calculation of Criteria Pollutant Emissions for Boilers Firing Gaseous Fuels

Boiler Operation Mode: Normal firing mode

Ops Hr/Day: 24 Worst Case

Ops Hr/Yr: 4380

# of Units: 2

Fuel Type: Nat Gas

Calculation of Criteria Pollutant Emissions from Each Identical Unit

Compound	Emission Factor, lb/MMscf (1)	Maximum Hourly Emissions, lb/hr (2)	Maximum Daily Emissions, lb/day	Maximum Annual Emissions, lbs/yr	Annual Emissions, ton/yr (3)	All Units: Maximum Hourly Emissions, lb/hr	All Units: Maximum Daily Emissions, lb/day	All Units: Maximum Annual Emissions, lbs/yr	All Units: Annual Emissions, ton/yr
NOx	1.13E+01	2.37E-01	5.68E+00	5.18E+02	2.59E-01	4.73E-01	1.14E+01	1.04E+03	5.18E-01
CO	3.90E+01	8.17E-01	1.96E+01	1.79E+03	8.95E-01	1.63E+00	3.92E+01	3.58E+03	1.79E+00
VOC	1.10E+01	2.31E-01	5.54E+00	5.05E+02	2.53E-01	4.61E-01	1.11E+01	1.01E+03	5.05E-01
SOx	6.00E-01	1.26E-02	3.02E-01	2.76E+01	1.38E-02	2.52E-02	6.04E-01	5.51E+01	2.76E-02
PM10	7.60E+00	1.59E-01	3.83E+00	3.49E+02	1.75E-01	3.19E-01	7.65E+00	6.98E+02	3.49E-01
PM2.5	7.60E+00	1.59E-01	3.83E+00	3.49E+02	1.75E-01	3.19E-01	7.65E+00	6.98E+02	3.49E-01
	lbs/mmbtu								
CO2	1.17E+02	2.51E+03	6.03E+04	1.10E+07	5.51E+03	5.03E+03	1.21E+05	2.20E+07	1.10E+04
Methane	1.30E-02	2.80E-01	6.71E+00	1.22E+03	6.12E-01	5.59E-01	1.34E+01	2.45E+03	1.22E+00
N2O	2.21E-04	4.74E-03	1.14E-01	2.08E+01	1.04E-02	9.48E-03	2.28E-01	4.15E+01	2.08E-02
CO2e									1.10E+04

Notes:

(1) natural gas criteria pollutant EF factors

(2) Based on maximum hourly boiler fuel use of 21.5 MMBtu/hr/boiler
and fuel HHV of 1025 Btu/scf gives 0.0210 MMscf/hr/boiler.

(3) Based on maximum annual boiler fuel use of 47,085 MMBtu/yr/boiler
and fuel HHV of 1025 Btu/scf gives 45.9366 MMscf/yr/boiler.

(4) LNBs only with GCPs

(5) PM2.5 = PM10

Refs:

(1) EFs from AP-42, Section 1.4, 7/98, and SCAQMD Rules 1146, and 1146.1.

(2) GHG EFs from CCAR General Protocol, June 2006.

Table C.1-2 Boiler #1 and #2
Calculation of Noncriteria Pollutant Emissions for Boilers Firing Gaseous Fuels

Boiler Operation Mode: Normal firing mode — # of Units: 2
Ops Hr/Day: 24 Worst Case — Fuel Type: Nat Gas
Ops Hr/Yr: 4380

Calculation of Noncriteria Pollutant Emissions from Each Identical Unit

Compound	Emission Factor, lb/MMscf (1)	Maximum Hourly Emissions, lb/hr (2)	Maximum Daily Emissions, lb/day	Maximum Annual Emissions, lbs/yr	Annual Emissions, ton/yr (3)	All Units: Maximum Hourly Emissions, lb/hr	All Units: Maximum Daily Emissions, lb/day	All Units: Maximum Annual Emissions, lbs/yr	All Units: Annual Emissions, ton/yr
Acetaldehyde	4.61E-03	9.67E-05	2.32E-03	4.44E-03	2.22E-06	1.93E-04	4.64E-03	8.88E-03	4.44E-06
Acrolein	4.51E-03	9.46E-05	2.27E-03	4.35E-03	2.17E-06	1.89E-04	4.54E-03	8.69E-03	4.35E-06
Ammonia	(5)	0.00E+00	0.00E+00	0.00E+00	0.00E+00	0.00E+00	0.00E+00	0.00E+00	0.00E+00
Benzene	2.43E-03	5.10E-05	1.22E-03	2.34E-03	1.17E-06	1.02E-04	2.45E-03	4.68E-03	2.34E-06
1,3-Butadiene	0.00E+00	0.00E+00	0.00E+00	0.00E+00	0.00E+00	0.00E+00	0.00E+00	0.00E+00	0.00E+00
Ethylbenzene	2.25E-03	4.72E-05	1.13E-03	2.17E-03	1.08E-06	9.44E-05	2.27E-03	4.34E-03	2.17E-06
Formaldehyde	4.75E-03	9.96E-05	2.39E-03	4.58E-03	2.29E-06	1.99E-04	4.78E-03	9.15E-03	4.58E-06
Hexane	6.30E-03	1.32E-04	3.17E-03	6.07E-03	3.04E-06	2.64E-04	6.34E-03	1.21E-02	6.07E-06
Naphthalene	2.37E-04	4.97E-06	1.19E-04	2.28E-04	1.14E-07	9.94E-06	2.39E-04	4.57E-04	2.28E-07
PAHs (4)	8.10E-05	1.70E-06	4.08E-05	7.80E-05	3.90E-08	3.40E-06	8.16E-05	1.56E-04	7.80E-08
Propylene	4.63E-01	9.71E-03	2.33E-01	4.46E-01	2.23E-04	1.94E-02	4.66E-01	8.92E-01	4.46E-04
Propylene oxide	0.00E+00	0.00E+00	0.00E+00	0.00E+00	0.00E+00	0.00E+00	0.00E+00	0.00E+00	0.00E+00
Toluene	3.23E-02	6.78E-04	1.63E-02	3.11E-02	1.56E-05	1.36E-03	3.25E-02	6.22E-02	3.11E-05
Xylene	1.87E-02	3.92E-04	9.41E-03	1.80E-02	9.01E-06	7.84E-04	1.88E-02	3.60E-02	1.80E-05
		0.00E+00	0.00E+00	0.00E+00	0.00E+00	0.00E+00	0.00E+00	0.00E+00	0.00E+00
		0.00E+00	0.00E+00	0.00E+00	0.00E+00	0.00E+00	0.00E+00	0.00E+00	0.00E+00
		0.00E+00	0.00E+00	0.00E+00	0.00E+00	0.00E+00	0.00E+00	0.00E+00	0.00E+00
		0.00E+00	0.00E+00	0.00E+00	0.00E+00	0.00E+00	0.00E+00	0.00E+00	0.00E+00
		0.00E+00	0.00E+00	0.00E+00	0.00E+00	0.00E+00	0.00E+00	0.00E+00	0.00E+00
		0.00E+00	0.00E+00	0.00E+00	0.00E+00	0.00E+00	0.00E+00	0.00E+00	0.00E+00
		0.00E+00	0.00E+00	0.00E+00	0.00E+00	0.00E+00	0.00E+00	0.00E+00	0.00E+00
		0.00E+00	0.00E+00	0.00E+00	0.00E+00	0.00E+00	0.00E+00	0.00E+00	0.00E+00

Notes:
(1) natural gas HAPs emission factors
(2) Based on maximum hourly boiler fuel use of 21.5 MMBtu/hr/boiler
and fuel HHV of 1025 Btu/scf gives 0.0210 MMscf/hr/boiler.
(3) Based on maximum annual boiler fuel use of 47,085 MMBtu/yr/boiler
and fuel HHV of 1025 Btu/scf gives 45.9366 MMscf/yr/boiler.
(4) Polycyclic aromatic hydrocarbons, excluding naphthalene (treated separately).
(5) LNB only with GCPs

Refs:
CARB Catef Database, Heater, NG, SCC 31000404
SDAPCD, B17, Toxics EFs Database

Table C.1-3 EXPECTED INTERNAL COMBUSTION ENGINE EMISSIONS

Liquid Fuel

Emergency Generator

Mfg:	Caterpillar	
Engine #:	3516C-HD TA	
Kw	2500	approx.
BHP:	4190	
RPM:	-	
Fuel:	#2 Diesel	
Fuel Use:	173.3	Gph (1)
FuelHHV:	139000	Btu/gal
mmbtu/hr:	24.09	HHV

Fuel Wt:	6.87	Lbs/gal
Fuel S:	0.0015	% wt.
Fuel S:	0.10305	Lbs/1000 gal
SO2:	0.2061	Lbs/1000 gal

# of Identical Engines: 2

Stack Data

Height:	46	Ft.
Diameter:	1	Ft.
Temp:	922	deg F
ACFM:	19049	

input the mfg ACFM or calculate per Exhaust sheet)

Area:	0.785	Sq.Ft.
Velocity:	404	Ft/Sec
Max Daily Op Hrs:	1	
Max Annual Op Hrs:	52	

If the engines will operate less than an hour for purposes of testing, use the final emissions values on page 2.

		Single Engine				*All Engines*			
EFs (g/bhp-hr)		**Lb/Hr**	**Lb/Day**	**Lbs/Yr**	**Tons/Yr**	***Lb/Hr***	***Lb/Day***	***Lbs/Yr***	***Tons/Yr***
NOx	5.05	46.61	46.61	2423.56	1.212	*93.21*	*93.21*	*4847.11*	*2.42*
CO	0.41	3.78	3.78	196.76	0.098	*7.57*	*7.57*	*393.53*	*0.20*
VOC	0.1	0.92	0.92	47.99	0.024	*1.85*	*1.85*	*95.98*	*0.05*
PM10	0.036	0.33	0.33	17.28	0.009	*0.66*	*0.66*	*34.55*	*0.017*
SOx	NA	0.04	0.04	1.86	0.0009	*0.07*	*0.07*	*3.71*	*0.002*
	lbs/gal								
CO2	22.38	3878	3878	201680	101	*7757*	*7757*	*403359*	*202*
Methane	0.0003	0.05	0.05	2.70	0.001	*0.10*	*0.10*	*5.41*	*0.003*
N2O	0.0001	0.02	0.02	0.90	0.0005	*0.03*	*0.03*	*1.80*	*0.0009*
CO2e					101.0				*202.0*

Notes:

1. fuel consumption based on 0.055 gal/hp-hr (avg EPA and SCAQMD values) if no value given by mfg for specific engine.
2. PM10 equals PM2.5.
3. PM10 used in HRA to represent DPM emissions.
4. GHG EFs from CCAR General Protocol, June 2006.

Page 2

Max Daily Op Time: 0.5 hrs

Max Annual # Tests: 52

	Single Engine				*All Engines*			
	Lb/Hr	**Lb/Day**	**Lbs/Yr**	**Tons/Yr**	***Lb/Hr***	***Lb/Day***	***Lbs/Yr***	***Tons/Yr***
NOx	23.30	23.30	1211.78	0.61	46.61	46.61	2423.56	1.21
CO	1.89	1.89	98.38	0.05	3.78	3.78	196.76	0.10
VOC	0.46	0.46	24.00	0.01	0.92	0.92	47.99	0.02
PM10	0.17	0.17	8.64	0.0043	0.33	0.33	17.28	0.0086
SOx	0.02	0.02	0.93	0.0005	0.04	0.04	1.86	0.0009
CO2	1939	1939	100840	50	3878	3878	201680	101
Methane	0.03	0.03	1.35	0.00	0.05	0.05	2.70	0.00
N2O	0.01	0.01	0.45	0.00	0.02	0.02	0.90	0.00
CO2e				50.50				101.01

Liquid Fuel
Emergency Fire Pump

Mfg:	John Deere	
Engine #:	6090H	
Kw	0	approx.
BHP:	346	
RPM:	-	
Fuel:	#2 Diesel	
Fuel Use:	7.6	Gph (1)
FuelHHV	139000	Btu/gal
mmbtu/hr	1.06	HHV

# of Identical Engines: 2

Stack Data

Height:	46	Ft.
Diameter:	0.67	Ft.
Temp:	821	deg F
ACFM:	2643	

input the mfg ACFM or calculate per Exhaust sheet)

Area:	0.353	Sq.Ft.
Velocity:	125	Ft/Sec
Max Daily Op Hrs:	1	
Max Annual Op Hrs:	52	

If the engines will operate less than an hour for purposes of testing, use the final emissions values on page 2.

Fuel Wt:	6.87	Lbs/gal
Fuel S:	0.0015	% wt.
Fuel S:	0.10305	Lbs/1000 gal
SO2:	0.2061	Lbs/1000 gal

		Single Engine				*All Engines*			
EFs (g/bhp-hr)		**Lb/Hr**	**Lb/Day**	**Lbs/Yr**	**Tons/Yr**	***Lb/Hr***	***Lb/Day***	***Lbs/Yr***	***Tons/Yr***
NOx	2.8	2.13	2.13	110.96	0.055	*4.27*	*4.27*	*221.93*	*0.11*
CO	2.6	1.98	1.98	103.04	0.052	*3.96*	*3.96*	*206.08*	*0.10*
VOC	0.2	0.15	0.15	7.93	0.004	*0.30*	*0.30*	*15.85*	*0.01*
PM10	0.15	0.11	0.11	5.94	0.003	*0.23*	*0.23*	*11.89*	*0.006*
SOx	NA	0.0016	0.0016	0.0815	0.0000	*0.0031*	*0.0031*	*0.1629*	*0.0001*
	lbs/gal								
CO2	22.38	170	170	8845	4	*340*	*340*	*17689*	*9*
Methane	0.0003	0.0023	0.0023	0.1186	0.0001	*0.0046*	*0.0046*	*0.2371*	*0.0001*
N2O	0.0001	0.0008	0.0008	0.0395	0.0000	*0.0015*	*0.0015*	*0.0790*	*0.0000*
CO2e					4.4				*8.9*

Notes:
1. fuel consumption based on 0.055 gal/hp-hr (avg EPA and SCAQMD values) if no value given by mfg for specific engine.
2. PM10 equals PM2.5.
3. PM10 used in HRA to represent DPM emissions.
4. GHG EFs from CCAR General Protocol, June 2006.

Page 2

Max Daily Op Time:	0.5	hrs
Max Annual # Tests:	52	

	Single Engine				*All Engines*			
	Lb/Hr	**Lb/Day**	**Lbs/Yr**	**Tons/Yr**	***Lb/Hr***	***Lb/Day***	***Lbs/Yr***	***Tons/Yr***
NOx	1.07	1.07	55.48	0.03	2.13	2.13	110.96	0.06
CO	0.99	0.99	51.52	0.03	1.98	1.98	103.04	0.05
VOC	0.0762	0.0762	3.9630	0.0020	0.1524	0.1524	7.9260	0.0040
PM10	0.0572	0.0572	2.9722	0.0015	0.1143	0.1143	5.9445	0.0030
SOx	0.0008	0.0008	0.0407	0.0000	0.0016	0.0016	0.0815	0.0000
CO2	85	85	4422	2	170	170	8845	4
Methane	0.0011	0.0011	0.0593	0.0000	0.0023	0.0023	0.1186	0.0001
N2O	0.0004	0.0004	0.0198	0.0000	0.0008	0.0008	0.0395	0.0000
CO2e				2.21				4.43

Table C.1-5 Cooling Towers #1 and #2

Cooling Tower Particulate Emissions

				Per Tower	Per Cell	All Towers
# of Identical Towers:	2					
Operational Schedule:	Hrs/day	Days/Yr	Hrs/Yr			
	16	365	5840			
Pumping rate of recirculation pumps (gal/min)				90,000.0		
Flow of cooling water (lbs/hr)				44,982,000.0		
Avg TDS of circ water (mg/l or ppmw)				9,968.0		
Flow of dissolved solids (lbs/hr)				448380.58		
Fraction of flow producing drift*				0.31		
Control efficiency of drift eliminators, %	0.0005			0.000005		
Calculated drift rate (lbs water/hr)				224.9		
PM10 emissions (lbs/hr)				**0.69**	**0.12**	**1.39**
PM10 emissions (lbs/day)				**11.12**	**1.85**	**22.24**
PM10 emissions (tpy)				**2.03**	**0.34**	**4.06**
PM2.5 fraction of PM10 per CARB CEIDARS App A.				0.60		
PM2.5 emissions (lbs/hr)				**0.42**	**0.07**	**0.83**
PM2.5 emissions (lbs/day)				**6.67**	**1.11**	**13.34**
PM2.5 emissions (tpy)				**1.22**	**0.20**	**2.44**

Notes:
Based on Method AP 42, Section 13.4, Jan 1995
*Technical Report EPA-600-7-79-251a, Page 63
Effects of Pathogenic and Toxic Materials Transported Via Cooling Device Drift - Volume 1.

Cooling Tower Stack Parameters

Base Elevation	2060	feet amsl
Number of Cells	6	
Length of Cooling Tower	325.00	feet
Width of Cooling Tower	54.00	feet
Height of Cooling Tower (to fan deck)	37.00	feet agl
Cell Release Height (fan shroud exit)	51.00	feet agl
Flow/Fan Discharge for each Cell	1,310,000	ACFM
Inlet air temperature (ambient):	variable	deg F
Discharge air temperature:	variable	deg F

Table C.1-6
Calculation of Hazardous and Toxic Pollutant Emissions from Cooling Towers

Cells per Tower:	6	Max Tower Drift Rate:	224.9	lbs/hr	Op Hrs/Day:	16	Makeup Water TDS:	ppm	1700
# of Identical Towers:	2				Op Hrs/Yr:	5840	Blowdown TDS		9968
							Avg Tower Flow TDS:		5834
							C of C:		5.86

Constituent	Concentration in Cooling Tower Water		Total Single Tower Emissions, lb/hr	Total Single Tower Emissions, lb/day	Total Single Tower Emissions, ton/yr	Single Cell Emissions, lb/hr	Single Cell Emissions, lb/day	Single Cell Emissions, ton/yr	Total All Towers Emissions, lb/hr	Total All Towers Emissions, lb/day	Total All Towers Emissions, ton/yr
Manganese	2.5	ppm	3.30E-03	5.27E-02	9.63E-03	5.49E-04	8.79E-03	1.60E-03	6.59E-03	1.05E-01	1.93E-02
Magnesium	59	ppm	7.78E-02	1.24E+00	2.27E-01	1.30E-02	2.07E-01	3.79E-02	1.56E-01	2.49E+00	4.54E-01
Lead	0.0034	ppm	4.48E-06	7.17E-05	1.31E-05	7.47E-07	1.20E-05	2.18E-06	8.97E-06	1.43E-04	2.62E-05
Arsenic	0.0097	ppm	1.28E-05	2.05E-04	3.74E-05	2.13E-06	3.41E-05	6.23E-06	2.56E-05	4.09E-04	7.47E-05
Aluminum	0.02	ppm	2.64E-05	4.22E-04	7.70E-05	4.40E-06	7.03E-05	1.28E-05	5.27E-05	8.44E-04	1.54E-04
Chromium	0.0048	ppm	6.33E-06	1.01E-04	1.85E-05	1.05E-06	1.69E-05	3.08E-06	1.27E-05	2.03E-04	3.70E-05
Cadmium	0.002	ppm	2.64E-06	4.22E-05	7.70E-06	4.40E-07	7.03E-06	1.28E-06	5.27E-06	8.44E-05	1.54E-05
Selenium	0.013	ppm	1.71E-05	2.74E-04	5.01E-05	2.86E-06	4.57E-05	8.34E-06	3.43E-05	5.49E-04	1.00E-04
Zinc	0.04	ppm	5.27E-05	8.44E-04	1.54E-04	8.79E-06	1.41E-04	2.57E-05	1.05E-04	1.69E-03	3.08E-04
Mercury	0.0000002	ppm	2.64E-10	4.22E-09	7.70E-10	4.40E-11	7.03E-10	1.28E-10	5.27E-10	8.44E-09	1.54E-09
Copper	0.0071	ppm	9.36E-06	1.50E-04	2.73E-05	1.56E-06	2.50E-05	4.56E-06	1.87E-05	3.00E-04	5.47E-05
Silver	0.002	ppm	2.64E-06	4.22E-05	7.70E-06	4.40E-07	7.03E-06	1.28E-06	5.27E-06	8.44E-05	1.54E-05
Nickel	0.004	ppm	5.27E-06	8.44E-05	1.54E-05	8.79E-07	1.41E-05	2.57E-06	1.05E-05	1.69E-04	3.08E-05
*	0	ppm	0.00E+00	0.00E+00	0.00E+00	0.00E+00	0.00E+00	0.00E+00	0.00E+00	0.00E+00	0.00E+00
*	0	ppm	0.00E+00	0.00E+00	0.00E+00	0.00E+00	0.00E+00	0.00E+00	0.00E+00	0.00E+00	0.00E+00
*	0	ppm	0.00E+00	0.00E+00	0.00E+00	0.00E+00	0.00E+00	0.00E+00	0.00E+00	0.00E+00	0.00E+00
*	0	ppm	0.00E+00	0.00E+00	0.00E+00	0.00E+00	0.00E+00	0.00E+00	0.00E+00	0.00E+00	0.00E+00
*	0	ppm	0.00E+00	0.00E+00	0.00E+00	0.00E+00	0.00E+00	0.00E+00	0.00E+00	0.00E+00	0.00E+00
*	0	ppm	0.00E+00	0.00E+00	0.00E+00	0.00E+00	0.00E+00	0.00E+00	0.00E+00	0.00E+00	0.00E+00
*	0	ppm	0.00E+00	0.00E+00	0.00E+00	0.00E+00	0.00E+00	0.00E+00	0.00E+00	0.00E+00	0.00E+00

Notes:
(1) Water analysis data supplied by project applicant.
(2) maximum value of either Ryken and Wetlands Supply Wells data
(3) blowdown TDS from water balance data supplied by applicant

Support Data for Tables C.1-1 through C.1-6
Harper Lake
Emission Equipment Operating / Test Hours (Total for Alpha and Beta Fields)

DESCRIPTION	Quantity (ea)	Type	Fuel Rating (ea)	Fuel Type	Daily Operating Hours (ea)	Emergency Test Hours per year (ea)
Auxiliary Boiler	2	Firetube Boiler	987 lb/hr	Natural Gas	12	n/a
Diesel Generator	2	Engine	173.3 gph	Diesel	n/a	52
Diesel Fire Pumps	2	Engine	23.5 gph	Diesel	n/a	52
Cooling Water Tower	2	Wet Cooling Drift	n/a	n/a	16	n/a
HTF Emissions	2	Vent Vapor	n/a	HTF	0.25	n/a

Support Data for Tables C.1-1 through C.1-6
Harper Lake
Emission Stack Parameters - Total for Alpha and Beta Fields

DESCRIPTION	Quantity (ea)	Type	Height (ft)	Diameter (ft)	Temperature (°F)	Exhaust Flowrate (ea)	Emissions (ttl)	Products of Combustion
Auxiliary Boiler	2	Firetube Boiler	80	1.7	301	20,660 lbs/hr	NOx = 9 ppm CO = 50 ppm	CO2 = 7.7% H2O = 16.9% N2 = 71.7% O2 = 3.8% SO2 = 0%
Diesel Generator	2	Engine	46	1	922	19,049 cfm	EPA T3	
Diesel Fire Pumps	2	Engine	46	0.67	821	2643 cfm	EPA T3	
Cooling Water Tower	2	Wet Cooling Drift	52	n/a	100	8,748,000 cfm	PM10 = 2 lb/hr	n/a
HTF Emissions	2	Vent Vapor	35	1	182	64,450 cft/day	95.9 lb/day VOC, 25.9 lb/day HAP	n/a

Table C.1-7 Operational Emissions from Dedicated On-Site Vehicles

Composite Emissions Factors for Gasoline On-Road Fueled Vehicles

		lbs/VMT			
NOx	CO	VOC	SOx	PM10	CO2
0.001564	0.009596	0.000882	0.000014	0.000107	1.461717

Ref: MDAB, Emfac 2007, V2.3, Nov 2006
On Road Vehicles (1970-2014)
MD Gasoline Trucks

Composite Emissions Factors for Diesel On-Road Fueled Vehicles

		lbs/VMT			
NOx	CO	VOC	SOx	PM10	CO2
0.021605	0.006966	0.001621	0.000001	0.000003	4.047915

Ref: MDAB, Emfac 2007, V2.3, Nov 2006
On-Road Heavy Duty Diesels (1970-2014)

Average Emissions Factors for Diesel Off-Road Fueled Vehicles

EFs from Exhaust-Main Sheet

		lbs/Hp-Hr		
NOx	CO	VOC	SOx	PM10
0.0061	0.0035	0.0011	0.000007	0.0004

Avg onsite equipment speed (mph): 5
Avg HP of proposed onsite off-road equipment: 100
Estimated onsite off-road equipment mileage per ye 24000

CO2 EF Data from SCAQMD EMFAC 2007, Version 2.3
Heavy-Heavy Duty Diesel Truck Values, Rev 03/07
AQMD Website, 3-2-09
Scenario Year 2014

		lbs/hr		
0.61	0.35	0.11	0.0007	0.04

		lbs/VMT			CO2	Methane
0.122	0.070	0.022	0.00014	0.008	4.213	0.000093

Estimated number of gasoline fueled vehicles dedicated to site operations: 32
Estimated total annual mileage for gasoline fueled vehicles: 105040

Estimated number of diesel fueled vehicles dedicated to site operations: 19
Estimated total annual mileage for diesel fueled vehicles: 13000

Avg On-site VMT/day 389

Estimated Onsite On-Road Gasoline Vehicle Emissions

	NOx	CO	VOC	SOx	PM10	PM2.5	CO2	Methane	N2O	CO2e
lbs/yr	164.3	1008.0	92.6	1.5	11.2	11.2	153538.8	32.7	17.3	159604.0
tons/yr	0.082	0.504	0.046	0.0007	0.0056	0.0056	76.769	0.016	0.009	79.802
lbs/avg day	0.450	2.762	0.254	0.0040	0.0308	0.0307	420.654	0.090	0.048	437.271

Estimated Onsite On-Road Diesel Vehicle Emissions

	NOx	CO	VOC	SOx	PM10	PM2.5	CO2	Methane	N2O	CO2e
lbs/yr	280.9	90.6	21.1	0.013	0.04	0.04	52622.9	2.7	1.7	53201.3
tons/yr	0.140	0.045	0.011	0.0000	0.0000	0.0000	26.311	0.001	0.001	26.601
lbs/avg day	0.769	0.248	0.058	0.0000	0.0001	0.0001	144.172	0.007	0.005	145.757

Estimated Onsite Off-Road Diesel Equipment Emissions

	NOx	CO	VOC	SOx	PM10	PM2.5	CO2	Methane	N2O	CO2e
lbs/yr	2928.000	1680.000	528.000	3.360	192.000	192.0000	101112.000	2.232	0.000	101158.9
tons/yr	1.464	0.840	0.264	0.0017	0.096	0.096	50.556	0.001	0.000	50.579
lbs/avg day	8.022	4.603	1.447	0.0092	0.526	0.526	277.019	0.006	0.000	277.148

Totals	*NOx*	*CO*	*VOC*	*SOx*	*PM10*	*PM2.5*	*CO2*	*Methane*	*N2O*	*CO2e*
tons/yr	*1.687*	*1.389*	*0.321*	*0.002*	*0.102*	*0.102*	*153.637*	*0.019*	*0.010*	*156.982*

Estimated Fugitive PM10/PM2.5 from Onsite Operations Unpaved Road Travel (General Site Operations)

Estimated Onsite Unpaved Road travel:		389	VMT/day
Estimated vehicle weight using onsite unpaved road		5	tons
Road surface silt content:		5.3	%
EPA AP-42, Section 13.2.2, Eq. 1a	Calc 1	0.48	
	Calc 2	1.26	
	EF PM10	0.90	lb/VMT
	EF PM2.5	0.19	lb/VMT
	Control Efficienc	0.75	
	Emission Fractio	0.25	

Controls	%Reduction	Fraction	
Watering	55	0.55	
Speed Limit	44	0.44	< 15 mph
***	0	0	
***	0	0	

per South Coast AQMD Fugitive Dust Mitigation Tables, Rev 4/2007.

	lbs/day	tons/yr
PM10	88.7	16.2
PM2.5	18.8	3.4

Support Data for Table C.1-7 - Onsite Operations Vehicle Data

Diesel Vehicles		each	total annual	
Type	# on site	VMT/yr	VMT	
SCA Cleaning Truck	4	3000	12000	
Evacuation Truck	2	500	1000	Emer use only
Crane	2	500	1000	Emer use only
Boom Forklift	2	500	1000	Emer use only
Small Tractor	5	3200	16000	
Backhoe/Loader	2	500	1000	Emer use only
Skip Loader	2	2500	5000	
		Total VMT	37000	

Gasoline Vehicles		each	total annual	
Type	# on site	VMT/yr	VMT	
Forklift	2	1500	3000	
Stakebed Truck	2	3000	6000	
Ranger Truck	17	2120	36040	
Ford F-150	4	4500	18000	
SUV Hybrid	2	10000	20000	Not included in emissions calcs
Welding Truck	2	3000	6000	
Ford F-350	3	12000	36000	
		Total VMT	105040	

All data supplied by HLSGS Project Team

ATTACHMENT C.1-1 NITROGEN VENTING OF THE HEAT TRANSFER FLUID SYSTEM

The heat transfer fluid will be comprised either of Therminol VP-1 produced by Solutia, Inc. or DowTherm A produced by Dow Chemical Company. Both materials are comprised of diphenyl ether (73-73.5%) and biphenyl (26.5-27%). Material Safety Data Sheets of both materials are presented following this analysis. These materials in gaseous form represent VOCs with biphenyl also constituting a HAP.

The HTF storage system will consist of 4 tanks per 125-140 MW plant, each tank being 12′ diameter by 48′ long. Nitrogen will be used to blanket the HTF in the storage tanks. Because of the thermal expansion of the HTF, nitrogen will be vented to the atmosphere on a daily basis from the HTF storage tanks in order to maintain the tanks at constant pressure. The nitrogen vented to the atmosphere will include small amounts of HTF. Emissions are calculated by considering the daily venting of nitrogen due to the expansion of the HTF and the vapor pressure of the HTF at the release temperature.

The amount of daily nitrogen that will be released is determined by the volume increase of the HTF. At the beginning of the day, the heat transfer fluid and the nitrogen will be at 560 °F, and the nitrogen will be at 47.7 psia. These conditions will remain the same in the storage tanks throughout the day. The fluid circulating in the system, however, will absorb heat and expand.

The HTF in the return side of the solar field is shown by bold lines in the figure below. The HTF in this piping will heat up from 560 °F to 740 °F during the day. The volume of this piping is 106,141 cubic feet. The increase in temperature reduces the density of the HTF from 51.2 lb/ft^3 to 43.9 lb/ft^3, thereby increasing the volume by 16.62%. The increase in volume of the heat transfer fluid in this piping is thus 8,824 cubic feet, or

$$0.1662(53{,}070\ \text{ft}^3) = 8{,}824\ \text{ft}^3$$

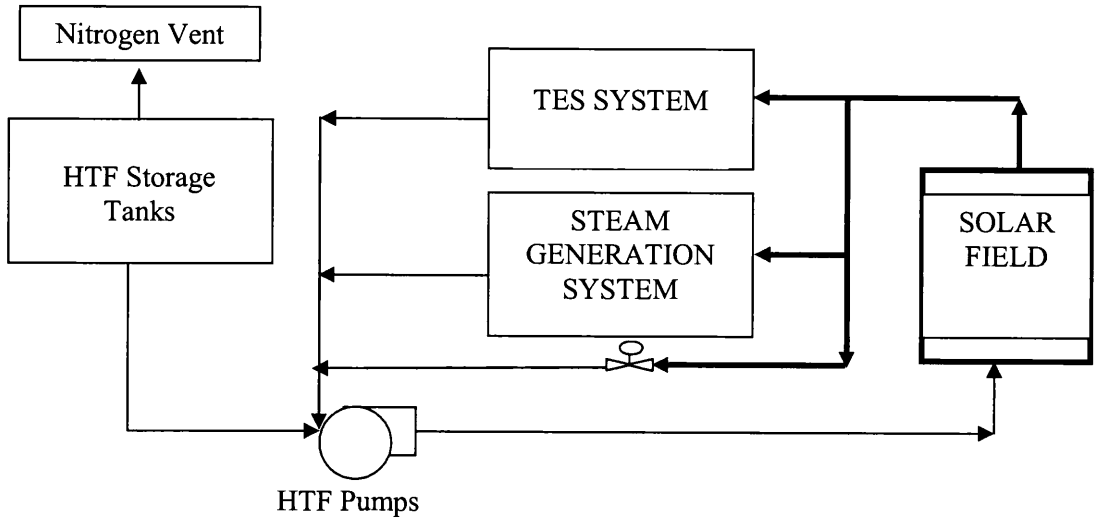

Heating up the return side of the solar field from 560°F to 740°F.

The HTF in the supply side of the solar field is shown by bold lines in the figure below. The HTF in this piping contains a volume of 47,063 cubic feet, which heats from 560 to 650 °F during TES and steam generation bypass conditions. The increase in temperature reduces the density of the HTF from 51.2 lb/ft^3 to 47.69 lb/ft^3 thereby increasing the volume by 7.40%. This yields an expansion volume of 3,484 cubic feet.

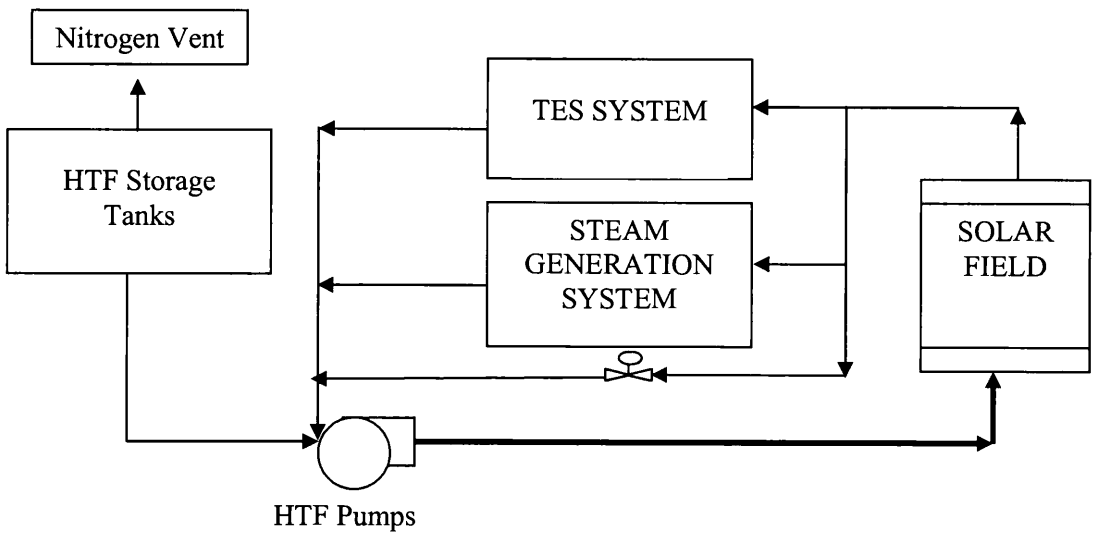

The supply piping heats up from 560°F to 650°F

The total daily expansion of the HTF is thus 12,308 cubic feet.

At the conditions within the storage tank before expansion (560°F and 47.7 psia),
Vapor pressure of HTF is 29.8 psia from Solutia Therminol VP1 properties
HTF mole fraction is HTF vapor pressure 29.8/ total pressure 47.7 = 0.6245

Nitrogen mole fraction is 1.0 - 0.6245 = 0.3755
Gas constant = 10.731
Assume that the initial vapor space in the expansion tanks is 100 cft
Total initial moles = total pressure 47.4 * total volume 100 cft / 10.731 / initial temp 560°F
Nitrogen moles = nitrogen mole fraction 0.3755 * total moles = 0.4354

At the conditions after expansion (740°F and 160.8 psia),
Vapor pressure of HTF is 147.1 psia from Solutia Therminol VP1 properties
HTF mole fraction is HTF vapor pressure 147.1/ total pressure 160.8 = 0.9151
Nitrogen mole fraction is 1.0 - 0.9151 = 0.0848
Gas constant = 10.731
Since all of the expansion is vented, the vapor space in the expansion tanks remains at 100 cft
Total moles w/expansion = total pressure 160.8 * total volume 100 cft / 10.731 / expansion temp 740°F
Nitrogen moles w/expansion = nitrogen mole fraction 0.0848 * total moles = 1.25

The high pressure nitrogen and HTF mixture is directed to a compartment in the HTF storage system, where the mixture is expanded and cooled to 16.3 psia and 194 °F, respectively. The HTF vapor will be in saturation at 194 °F, which corresponds to a vapor pressure of 0.0491 psia.

HTF mole fraction is HTF vapor pressure 0.0491/ total pressure 16.3 = 0.0030
Nitrogen mole fraction is 1.0 - 0.0030 = 0.9970
Nitrogen vented is the difference between the initial amount of nitrogen and the amount of nitrogen the vapor space can hold after expansion.
Nitrogen moles vented = 1.25 - 0.4354 = 0.8157
Total vented moles = nitrogen moles vented 0.8157 / nitrogen mole fraction 0.9970 = 0.8157
Total vented volume = total moles 0.8157 * 10.731 * temperature 194F / pressure 16.3 = 104.6 cft

This vented volume is based on the assumption that the initial vapor space was 100cft. We know that the actual expansion volume is 12,308 cft. The scale up ratio for the volume must also be used for the total vented moles.
Scale up ratio = 12,308 actual / 104.6 assumed = 117.62
Actual total vented moles = assumed basis 0.8157 * scale up ratio 117.62 = 95.94
Actual HTF vented moles = actual total vented moles 95.94 * HTF mole fraction 0.0030 = 0.2889

HTF mass vented = HTF moles * HTF molecular weight 166 = **47.95 lbs per 140 MW plant**

Maximum VOC emissions from the nitrogen venting are thus 47.95 lb/day (16.8 tons/year) per plant with a maximum of 27% or 12.95 lb/day (2.36 tons/year) comprised of biphenyl, a HAP. Since the expansion is expected to take place over the course of an hour in the morning, the daily emissions are represented by the maximum hourly emissions.

ATTACHMENT C.1-2

ENGINE SPECIFICATION SHEETS

DIESEL GENERATOR SET

CATERPILLAR®

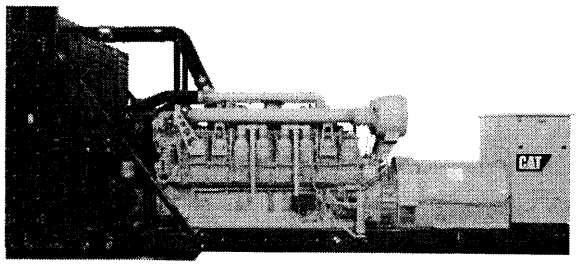

Image shown may not reflect actual package.

STANDBY
2500 ekW 3125 kVA
60 Hz 1800 rpm 480 Volts

Caterpillar is leading the power generation marketplace with Power Solutions engineered to deliver unmatched flexibility, expandability, reliability, and cost-effectiveness.

FEATURES

FUEL/EMISSIONS STRATEGY
- EPA Tier 2

DESIGN CRITERIA
- The generator set accepts 100% rated load in one step per NFPA 110 and meets ISO 8528-5 transient response.

UL 2200
- UL 2200 listed packages available. Certain restrictions may apply. Consult with your Caterpillar Dealer.

FULL RANGE OF ATTACHMENTS
- Wide range of bolt-on system expansion attachments, factory designed and tested

SINGLE-SOURCE SUPPLIER
- Fully prototype tested with certified torsional vibration analysis available

WORLDWIDE PRODUCT SUPPORT
- Caterpillar® dealers provide extensive post sale support including maintenance and repair agreements
- Caterpillar dealers have over 1,600 dealer branch stores operating in 200 countries
- The Cat® S•O•S℠ program cost effectively detects internal engine component condition, even the presence of unwanted fluids and combustion by-products

CAT 3516C-HD TA DIESEL ENGINE
- Reliable, rugged, durable design
- Field-proven in thousands of applications worldwide
- Four-stroke-cycle diesel engine combines consistent performance and excellent fuel economy with minimum weight

CAT SR5 GENERATOR
- Matched to the performance and output characteristics of Caterpillar engines
- UL 1446 Recognized
- Class H insulation system

CAT EMCP 3 SERIES CONTROL PANELS
- Simple user friendly interface and navigation
- Scalable system to meet a wide range of customer needs
- Integrated Control System and Communications Gateway

STANDBY 2500 ekW 3125 kVA

60 Hz 1800 rpm 480 Volts

CATERPILLAR®

FACTORY INSTALLED STANDARD & OPTIONAL EQUIPMENT

System	Standard	Optional
Air Inlet	• Single element canister type air cleaner • Service indicator	• Dual element & heavy duty air cleaners (with pre-cleaners) • Air inlet adapters & shutoff
Cooling	• Radiator with guard (43°C) • Coolant drain line with valve • Fan and belt guards • Caterpillar Extended Life Coolant • Low coolant level & high temperature alarm or shutdown	• Radiator duct flange • Jacket water heater
Exhaust	• Dry exhaust manifold • Flanged faced outlets	• Mufflers and Silencers • Stainless steel exhaust flex fittings • Elbows, flanges, expanders & Y adapters
Fuel	• Secondary fuel filters • Fuel priming pump • Flexible fuel lines • Fuel cooler* *Not included with packages without radiators	• Water separator • Duplex fuel filter
Generator SR5	• Class H insulation • Class H temperature (125°C prime/150°C standby)	• Oversize & premium generators • Anti-condensation space heater • Bearing temperature detector • Stator temperature detector
Power Termination	• Bus bar (NEMA and IEC meachanicallug holes) -right side standard • Top and bottom cable entry	• Circuit breakers, UL listed, 3 pole with shunt trip, 80% or 100% rated, choice of trip units, manual or electrically operated (low voltage only) • Circuit breakers, IEC compliant, 3 or 4 pole with shunt trip (low voltage only), choice of trip units, manual or electrically operated • Shroud cover for bottom cable entry • Power terminations can be located on the left and/or rear as an option. Also, multiple circuit breakers can be ordered (up to 3)
Governor	• ADEM™ 3	• Load share module
Control Panels	• User Interface panel (UIP) - rear mount (standard) • EMCP3.1 Genset Controller • Speed adjust (on panel) • AC&DC customer wiring area (right side) • CAT digital voltage regulator (CDVR) with KVAR/PF control, 3-phase sensing • Emergency Stop Pushbutton	• EMCP 3.3 • Option for right or left mount UIP • Local & remote annunciator modules • Load share module • Discrete I/O module • Generator temperature monitoring & protection • Voltage Adjust (on panel)
Lube	• Lubricating oil and filter • Oil drain line with valves • Fumes disposal • Gear type lube oil pump	• Oil level regulator • Deep sump oil pan • Electric & air prelube pumps • Manual prelube with sump pump • Duplex oil filter
Mounting	• Structual steel tube • Anti-vibration mounts (shipped loose)	• Isolator removal
Starting/Charging	• 24 volt starting motor(s) • Batteries with rack and cables • Battery disconnect switch	• Battery chargers (10&20AMP) •45 amp charging alternator • Oversize batteries • Ether starting aid • Heavy duty starting motors • Barring device (manual) • Air starting motor with control & silencer
General	• Right-hand service • Paint - Caterpillar Yellow except rails and radiators are gloss black • SAE standard rotation • Flywheel and flywheel housing - SAE No. 00	• CSA certification • EU Certificate of Conformance
Note	Standard and optional equipment may vary for UL 2200 Listed Packages. UL 2200 Listed packages may have oversized generators with a different temperature rise and motor starting characteristics.	

STANDBY 2500 ekW 3125 kVA

60 Hz 1800 rpm 480 Volts

CATERPILLAR®

SPECIFICATIONS

CAT GENERATOR

Frame.....1842
Excitation.....Permanent Magnet
Pitch.....0.6667
Number of poles.....4
Number of bearings.....2
Number of leads.....6
Insulation..... UL 1446 Recognized Class H with tropicalization and antiabrasion
IP Rating.....Drip Proof IP22
Alignment.....Closed Coupled
Overspeed capability..... 125%
Wave form..... 2%
Paralleling kit/Droop transformer.....Standard
Voltage regulator.3 Phase sensing with selectible volts/Hz
Voltage regulation .....Less than +/- 1/2% (steady state)
Less than +/- 1/2% (w/3% speed change)
Telephone influence factor.....Less than 50
Harmonic distortion..... Less than 5%

CAT DIESEL ENGINE

3516C-HD ATAAC, V-16,4 stroke, water-cooled
Bore..... 170.00 mm (6.69 in)
Stroke.....215.00 mm (8.46 in)
Displacement.....78.08 L (4764.73 in³)
Compression Ratio..... 14.7:1
Aspiration.....TA
Fuel System..... Electronic unit injection
Governor Type.....ADEM3

CAT EMCP3 CONTROL PANELS

EMCP 3.1 (standard)
EMCP 3.2 & 3.3 (Optional)
24 Volt DC control
Generator insturments designed to meet UL/CSA/CE
Integral generator terminal box
Single location for customer connection
MODBUS isolated data link (RS0485 half-duplex)
supports serial communication at data rate up to 33.6 kbaud
Auto start/stop control
True RMS metering, 3-phase
• Digital indication for:
-RPM
-Operating hours
-Oil pressure
-Coolant temperature
- System DC volts
--L-L volts, L-N volts, phase amps, Hz
-Ekw, kVA, kVAR, kW-hr, %kW, PF
• Shutdowns with indicating lights for:
-Low oil pressure
-High coolant temperature
- Low coolant level
- Overspeed
-Overspeed
-Emergency stop
- Failure to start (over crank)
• Programmable protective relay functions:
- Under and over voltage
- Under and over frequency
- Reverse power
- Overcurrent (phase & total)
-

STANDBY 2500 ekW 3125 kVA

60 Hz 1800 rpm 480 Volts

CATERPILLAR®

TECHNICAL DATA

Open Generator Set - - 1800 rpm/60 Hz/480 Volts	DM8266	
EPA Tier 2	~4190 HP	
Generator Set Package Performance		
Genset Power rating @ 0.8 pf	3125 kVA	
Genset Power rating with fan	2500 ekW	
Coolant to aftercooler		
Coolant to aftercooler temp max	50 ° C	122 ° F
Fuel Consumption		
100% load with fan	655.9 L/hr	173.3 Gal/hr
75% load with fan	509.6 L/hr	134.6 Gal/hr
50% load with fan	372.3 L/hr	98.4 Gal/hr
Cooling System[1]		
Air flow restriction (system)	0.12 kPa	0.48 in. water
Air flow (max @ rated speed for radiator arrangement)	2800 m³/min	98881 cfm
Engine Coolant capacity with radiator/exp. tank	504.0 L	133.1 gal
Engine coolant capacity	233.0 L	61.6 gal
Radiator coolant capacity	271.0 L	71.6 gal
Inlet Air		
Combustion air inlet flow rate	198.0 m³/min	6992.3 cfm
Exhaust System		
Exhaust stack gas temperature	494.4 ° C	921.9 ° F
Exhaust gas flow rate	539.4 m³/min	19048.7 cfm
Exhaust flange size (internal diameter)	203.2 mm	8.0 in
Exhaust system backpressure (maximum allowable)	6.7 kPa	26.9 in. water
Heat Rejection		
Heat rejection to coolant (total)	830 kW	47202 Btu/min
Heat rejection to exhaust (total)	2478 kW	140924 Btu/min
Heat rejection to aftercooler	763 kW	43392 Btu/min
Heat rejection to atmosphere from engine	161 kW	9156 Btu/min
Heat rejection to atmosphere from generator	106.9 kW	6079.4 Btu/min
Alternator[2]		
Motor starting capability @ 30% voltage dip	6559 skVA	
Frame	1842	
Temperature Rise	150 ° C	270 ° F
Lube System		
Sump refill with filter	401.3 L	106.0 gal
Emissions (Nominal)[3]		
NOx g/hp-hr	5.05 g/hp-hr	
CO g/hp-hr	.41 g/hp-hr	
HC g/hp-hr	.1 g/hp-hr	
PM g/hp-hr	.036 g/hp-hr	

[1] For ambient and altitude capabilities consult your Caterpillar dealer. Air flow restriction (system) is added to existing restriction from factory.

[2] UL 2200 Listed packages may have oversized generators with a different temperature rise and motor starting characteristics. Generator temperature rise is based on a 40 degree C ambient per NEMA MG1-32.

[3] Emissions data measurement procedures are consistent with those described in EPA CFR 40 Part 89, Subpart D & E and ISO8178-1 for measuring HC, CO, PM, NOx. Data shown is based on steady state operating conditions of 77°F, 28.42 in HG and number 2 diesel fuel with 35° API and LHV of 18,390 btu/lb. The nominal emissions data shown is subject to instrumentation, measurement, facility and engine to engine variations. Emissions data is based on 100% load and thus cannot be used to compare to EPA regulations which use values based on a weighted cycle.

CATERPILLAR®

RATING DEFINITIONS AND CONDITIONS

Meets or Exceeds International Specifications: AS1359, CSA, IEC60034, ISO 3046, ISO 8528, NEMA MG 1-33, UL508A, 98/37/EC

Standby - Output available with varying load for the duration of the interruption of the normal source power. Average power output is 70% of the standby power rating. Typical operation is 200 hours per year, with maximum expected usage of 500 hours per year. Standby power in accordance with ISO 8528. Fuel stop power in accordance with ISO 3046. Standby ambients shown indicate ambient temperature at 100% load which results in a coolant top tank temperature just below the shutdown temperature.

Ratings are based on SAE J1349 standard conditions. These ratings also apply at ISO 3046 standard conditions.

Fuel rates are based on fuel oil of 35° API [16° C (60° F)] gravity having an LHV of 42 780 kJ/kg (18,390 Btu/lb) when used at 29° C (85° F) and weighing 838.9 g/liter (7.001 lbs/U.S. gal.). Additional ratings may be available for specific customer requirements, contact your Caterpillar representative for details. For information regarding Low Sulfur fuel and Biodiesel capability, please consult your Caterpillar dealer.

STANDBY 2500 ekW 3125 kVA

60 Hz 1800 rpm 480 Volts

CATERPILLAR®

DIMENSIONS

Package Dimensions		
Length	7073.1 mm	278.47 in
Width	2569.2 mm	101.15 in
Height	3003.5 mm	118.25 in
Weight	18 441 kg	40,655 lb

NOTE: For reference only - do not use for installation design. Please contact your local dealer for exact weight and dimensions. (General Dimension Drawing #2924201).

Performance No.: DM8266

Feature Code: 516DE5L

Gen. Arr. Number: 2523944

Source: U.S. Sourced

March 04 2008 11953998

www.CAT-ElectricPower.com

© 2008 Caterpillar
All rights reserved.

Materials and specifications are subject to change without notice. The International System of Units (SI) is used in this publication.

CAT, CATERPILLAR, SAFETY.CAT.COM their respective logos, "Caterpillar Yellow," and the POWER EDGE trade dress, as well as corporate and product identity used herein, are trademarks of Caterpillar and may not be used without permission.

JOHN DEERE

PowerTech™ Plus

6090H Diesel Engine

for Generator Set Applications

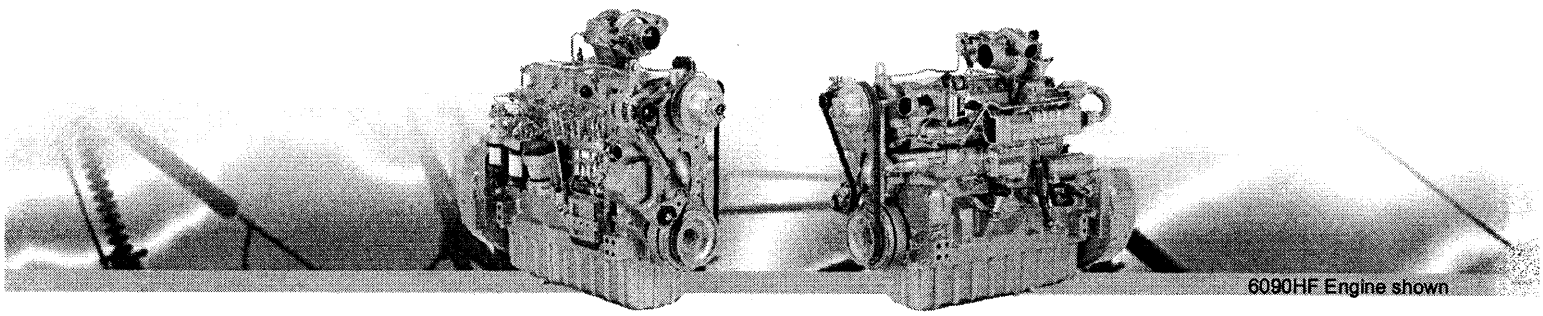

6090HF Engine shown

General Data

Model	6090HF485
Number of cylinders	6
Displacement-- L (cu in)	9 (549)
Bore and Stroke-- mm (in)	118.4 x 136.0 (4.66 x 5.35)
Compression Ratio	16.0 : 1
Engine Type	In-line, 4-Cycle
Aspiration	Air-to-Air
Length-- mm (in)	1208 (47.6)
Width-- mm (in)	630 (24.8)
Height-- mm (in)	1113 (43.8)
Weight, dry-- kg (lb)	901 (1986)

Ratings

Prime power at 60 Hz (1800)	235 kW (315 hp)
Standby power at 60 Hz (1800)	258 kW (346 hp)

Prime power is the nominal power an engine is capable of delivering with a variable load for an unlimited number of hours per year. This rating conforms to ISO 3046 and SAI J1995.
Standby power is the nominal engine power available at varying load factors for up to 500 hours per year. This rating conforms to ISO 3046 and SAE J1995. The calculated generator set rating range for standby applications is based on minimum engine power (nominal -5%) to provide 100% meet-or-exceed performance for assembled standby generator sets.

Certifications

- CARB
- EPA Tier 3

Dimensions

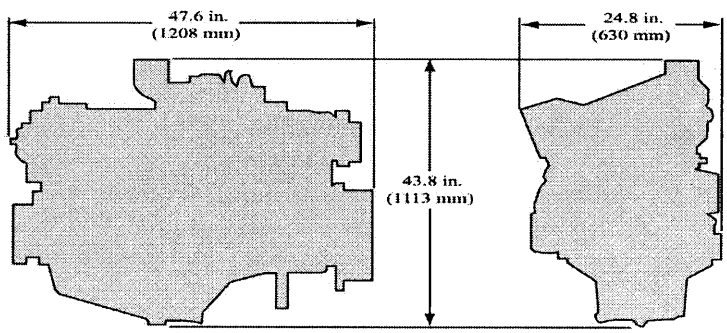

Photographs may show non-standard equipment.

PowerTech™ Plus 6090H Diesel Engine

for Generator Set Applications

Performance curve

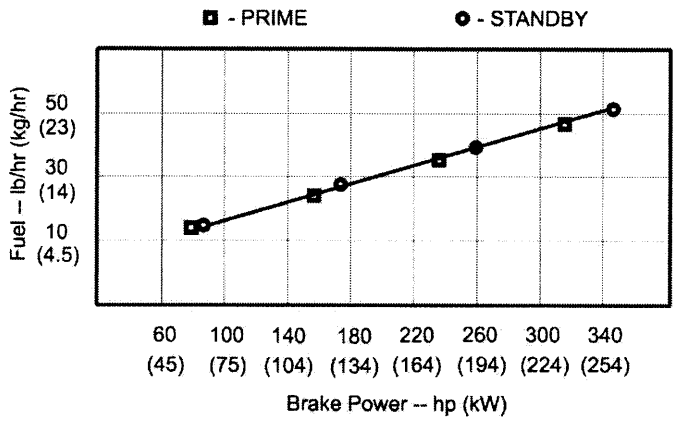

*

Performance data

Hz (rpm)	Generator efficiency %	Fan power		Power factor	Calculated generator set output			
					Prime		Standby	
		kW	hp		kWe	kVa	kWe	kVa
60 (1800)	90-94	15.5	20.8	0.8	197-206	247-258	218-228	273-285

Features and Benefits

4-Valve Cylinder Head
- The 4-valve cylinder head provides excellent airflow. New 4-valve U-flow head design

High Pressure Common Rail Fuel System (HPCR) and Engine Control Unit (ECU)
- The HPCR fuel system provides variable common-rail pressure, multiple injections, and higher injection pressures, up to 1600 bar (23,000 PSI). It also controls fuel injection timing and provides precise control for the start, duration, and end of the injection

Cooled Exhaust Gas Recirculation (EGR)
- EGR cools and mixes measured amounts of cooled exhaust gas with incoming fresh air to lower peak combustion temperatures, thereby reducing NOx

Variable Geometry Turbocharger (VGT)
- Varies exhaust pressure based on load and speed to ensure proper EGR flow; greater low-speed maintaining low-speed torque, transient response time, and peak torque. It enables an engine to meet emissions regulations with better fuel economy and the lowest installed costs

Air-to-Air Aftercooled
- This is the most efficient method of cooling intake air to help reduce engine emissions while maintaining low-speed torque, transient response time, and peak torque. It enables an engine to meet emissions regulations with better fuel economy and the lowest installed costs

John Deere Electronic Engine Controls
- Electronic engine controls monitor critical engine functions providing warning and/or shutdown to prevent costly engine repairs; eliminates need for add-on governing components; all lowering total installed costs. Snapshot diagnostic data that can be retrieved using commonly available diagnostic service tools
- New common wiring interface connector for vehicles or available OEM instrumentation packages; new solid conduit and "T" connectors to reduce wiring stress, greater durability and improved appearance
- Factory installed engine mounted ECU or remote mounted ECU, wiring harness and associated components
- Industry standard SAE J1939 interface which communicates with other vehicle systems, eliminating redundant sensors and reducing vehicle installed cost

Compact Size
- Lower installed cost
- Mounting points are the same as Tier 2/Stage II engine models

Engine Performance
- Block loading capability provided with standard electronic governor control

Additional Features
- Self-adjusting poly-vee fan drive
- Single-piece low friction piston
- Low pressure fuel system with "auto-prime" feature
- Directed top-deck cooling

JOHN DEERE

Power Systems
3801 W. Ridgeway Ave.
PO Box 5100
Waterloo, IA 50704-5100
Phone: 800.553.6446
Fax: 319.292.5075

Power Systems
Usine de Saran
La Foulonnerie - B.P. 11.13
45401 Fleury les Aubrais Cedex
France
Phone: 33.2.38.82.61.19
Fax: 33.2.38.82.60.00

All values at rated speed and power with standard options unless otherwise noted.
Specifications and design subject to change without notice.

Litho in U.S.A. (08-10) © 2008 JOHN DEERE

* ~ 52 lb FUEL/HR @ 346 HP. ≅ 7.6 gPH.

John Deere

PowerTech™ Plus

PDF

6090H

Diesel Engine

---

for Generator Set Applications

6090HF Engine

6090HF Engine shown

General Data

Model 6090HF485
Number of cylinders 6
Displacement-- L (cu in) 9 (549)
Bore and Stroke-- mm (in) 118.4 x 136.0 (4.66 x 5.35)
Compression Ratio 16.0 : 1
Engine Type In-line, 4-Cycle
Aspiration Air-to-Air
Length-- mm (in) 1208 (47.6)
Width-- mm (in) 630 (24.8)
Height-- mm (in) 1113 (43.8)
Weight, dry-- kg (lb) 901 (1986)

Ratings

Prime power at 60 Hz (1800)
235 kW (315 hp)
Standby power at 60 Hz (1800)
258 kW (346 hp)
Prime power is the nominal power an engine is capable of delivering with a variable load for an unlimited number of hours per year. This rating conforms to ISO 3046 and SAI J1995.
Standby power is the nominal engine power available at varying load factors for up to 500 hours per year. This rating conforms to ISO 3046 and SAE J1995. The calculated generator set rating range for standby applications is based on minimum engine power (nominal -5%) to provide 100% meet-or-exceed performance for assembled standby generator sets.

Certifications

- CARB
- EPA Tier 3

Dimensions

6090HF485_X engine dimension

Photographs may show non-standard equipment.

PowerTech™ Plus

6090H

Diesel Engine

---

for Generator Set Applications

Performance curve

6090HF485_X performance

Performance data

Hz (rpm)	Generator efficiency %	Fan power kW	Fan power hp	Power factor	Calculated generator set output Prime kWe	Prime kVa	Standby kWe	Standby kVa
60 (1800)	90-94	15.5	20.8	0.8	197-206	247-258	218-228	273-285

Features and Benefits

4-Valve Cylinder Head

- The 4-valve cylinder head provides excellent airflow. New 4-valve U-flow head design

High Pressure Common Rail Fuel System (HPCR) and Engine Control Unit (ECU)

- The HPCR fuel system provides variable common-rail pressure, multiple injections, and higher injection pressures, up to 1600 bar (23,000 PSI). It also controls fuel injection timing and provides precise control for the start, duration, and end of the injection

Cooled Exhaust Gas Recirculation (EGR)

- EGR cools and mixes measured amounts of cooled exhaust gas with incoming fresh air to lower peak combustion temperatures, thereby reducing NOx

Variable Geometry Turbocharger (VGT)

- Varies exhaust pressure based on load and speed to ensure proper EGR flow; greater low-speed maintaining low-speed torque, transient response time, and peak torque. It enables an engine to meet emissions regulations with better fuel economy and the lowest installed costs

Air-to-Air Aftercooled

- This is the most efficient method of cooling intake air to help reduce engine emissions while maintaining low-speed torque, transient response time, and peak torque. It enables an engine to meet emissions regulations with better fuel economy and the lowest installed costs

John Deere Electronic Engine Controls

- Electronic engine controls monitor critical engine functions providing warning and/or shutdown to prevent costly engine repairs; eliminates need for add-on governing components; all lowering total installed costs. Snapshot diagnostic data that can be retrieved using commonly available diagnostic service tools
- New common wiring interface connector for vehicles or available OEM instrumentation packages; new solid conduit and "T" connectors to reduce wiring stress, greater durability and improved appearance
- Factory installed engine mounted ECU or remote mounted ECU, wiring harness and associated components
- Industry standard SAE J1939 interface which communicates with other vehicle systems, eliminating redundant sensors and reducing vehicle installed cost

Compact Size

- Lower installed cost
- Mounting points are the same as Tier 2/Stage II engine models

Engine Performance

- Block loading capability provided with standard electronic governor control

Additional Features

- Self-adjusting poly-vee fan drive
- Single-piece low friction piston
- Low-pressure fuel system with "auto-prime" feature
- Directed top-liner cooling

John Deere Power Systems
3801 W. Ridgeway Ave.
PO Box 5100
Waterloo, IA 50704-5100
Phone: 800.553.6446
Fax: 319.292.5075 John Deere Power Systems
Usine de Saran
La Foulonnerie - B.P. 11.13
45401 Fleury les Aubrais Cedex
France
Phone: 33.2.38.82.61.19

Fax: 33.2.38.82.60.00
All values at rated speed and power with standard options unless otherwise noted.
Specifications and design subject to change without notice.
Litho in U.S.A. (08-10) © 2008 JOHN DEERE
Please use the PDF version of this document for printing.

ATTACHMENT C.1-3

AUXILIARY BOILER SPECIFICATION SHEETS

Auxiliary Boiler Operational Data and Specification Sheets

Natural Gas Requirement

Mojave Solar Project at Harper Lake

		Boilers	Flow	Units	Conversions	
Connected Load (max instantaneous load) (cu ft/hr)	41,829	2	21.5	MMBtu/hr	1028	Btu/scf
Minimum Load (cu ft/hr)	-	2	0	MMBtu/hr	1000000	MM
Average load (cu ft/hr)	41,829	2	21.5	MMBtu/hr	24	hours/day
Daily Maximum Load (cu ft/day)	1,003,891	2	516	MMBtu/day		
Daily Minimum Load (cu ft/day)	-	2	0	MMBtu/day		
Daily Average Load (cu ft/day)	501,946	2	258	MMBtu/day		
Requested Delivery Pressure (psig)	30 < P < 150 at each power island					
Proposed Meter Location	On each power island. Connection can be made at Harper Lake and easement can be provided to route pipeline to remote power island. See attached map.					

Assumptions:

Natrual gas requirement is shown for entire project. Two individual connections are desired though.
Boilers operate at full load when operating
Boilers operate 12 hours per day 365 days per year
Boilers can operate 0 hours per day
Boilers can operate 24 hours per day

Boiler Exhaust Flow Vs. Load

Load	**100%**	**75%**	**50%**	**25%**
ACFM @ Stack	6184	5066	3944	2695
DSCFM @ 3% O2	3589	2683	1772	779

STANDARD SPECIFICATION FOR D-TYPE SHOP-ASSEMBLED INDUSTRIAL WATERTUBE STEAM GENERATING EQUIPMENT

I. SCOPE

A. This specification shall govern the construction features, materials, fabrication, inspection, and preparation for shipment of "package type" shop-assembled, watertube steam generating equipment complete with burner assembly, necessary appurtenances, controls and auxiliary equipment mounted to the maximum practical extent (allowed by shipping clearances) as an integral unit on a steel base so as to make a complete self-contained assembly.

B. Any deviation from this specification must be specifically approved prior to submittal of proposed bid. All requests for approval of design deviations shall be presented in writing at least ten (10) days prior to bid date.

II. GENERAL REQUIREMENTS

A. Proposal:

1. Complete description, drawings, and material specifications and performance shall accompany each proposal.

B. Guarantee:

1. The boiler manufacturer shall guarantee the steam generating capacity and thermal efficiency as stated herein, while the unit is being fired at 100% load with the primary fuel at the specified operating conditions.

2. Performance and efficiency tests shall be conducted immediately after completion of startup. The manufacturer must have a representative in attendance at the time the test is conducted.

3. All equipment is to be guaranteed against defective design, workmanship, or material for one year from date of initial operation, but not to exceed 18 months from date of shipment or date equipment meets ready-to-ship status.

C. Standards and Codes:

1. The following regulatory codes, standards, and publications, in effect on date of invitation for bids, form a part of this specification. All applicable components shall be designed and constructed in accordance with these codes, with additions or modifications as required by this specification.

   a. ASME Boiler and Pressure Vessel Code
   b. ASME Power Test Code
   c. ABMA Manual of Industry Standards

D. Instructions and Data Sheets:

1. The manufacturer shall furnish ASME Manufacturer's Data Sheets, five (5) copies of operating instruction manuals, and certified prints.

III. PROCESS DESIGN REQUIREMENTS

A. Operating Conditions:

1.	Design Continuous Capacity	_____Lbs/hr
2.	Design Pressure	_____PSIG
3.	Operating Pressure	_____PSIG
4.	Final Steam Temperature	_____°F
5.	Feedwater Temperature	_____°F
6.	Boiler Efficiency*	_____%
7.	Elevation above Sea Level	_____Ft
8.	Combustion Air Temperature	_____°F
9.	Electrical Characteristics	___ Volts ___ Phase ___ Hertz
10.	Primary Fuel	_____Supply Pressure
11.	Standby Fuel	_____Supply Pressure
12.	Insurance Requirements	_____

* Unmeasured losses of up to 1% can be used.

B. General Conditions:

1. This specification covers the furnishing of steam generating unit(s) each to develop the above stated maximum steam capacities. Each steam generating unit shall consist of a two drum D-type, shop-assembled, package type watertube boiler assembly with integrally-mounted burner and fan (shipping clearances permitting), controls, and other necessary appurtenances so as to make a complete self-contained unit that can be readily transported by common carrier, with a minimum of disassembly insofar as shipping clearances permit.

2. Material shall be as specified herein. Material not specifically stipulated shall be of the best commercial quality. All materials shall be free from defects that might affect the serviceability of the finished product.

3. Steam leaving the boiler shall not contain more than 1 ppm TDS if superheated steam or 0.5% moisture if saturated steam with boiler water concentrations not exceeding the values as recommended by the ABMA for the applicable operating pressure.

4. Boiler parameters shall be as defined below:

   a. Radiant heating surfaces shall be calculated on a flat projected basis.

   b. Furnace volume shall be determined with the furnace limit being considered as not extending beyond the first row of water screen tubes or superheater tubes, whichever first comes in contact with the furnace's exit flue gases.

6. The furnace side walls, roof, floor, front & rear walls shall be 100% water-cooled membrane surface. Membrane design will consist of 2" OD tubes on 4" centerlines, with membrane fins between tubes. The adjacent fins of each outboard furnace and convection tube shall be continuously seal-welded together, forming a water-cooled, gas-tight inner seal. The inboard row of finned tubes between the furnace and convection zone shall be seal-welded together to prevent short-circuiting of flue gas from the furnace to the boiler flue gas outlet. Boiler shall be designed for minimum refractory. Burner throat shall be refractory-free.

7. No part of the boiler drums shall be directly exposed to furnace radiation. Refractory shall be utilized to protect from radiant heat.

8. The furnace shall be designed to restrict flame impingement and permit long flame travel. Furnaces shall be provided with the necessary water-cooled radiant surface to assure the reduction of the furnace exit gas temperatures to a maximum of 2100°F prior to entry into the convection zone.

IV. BOILER DESIGN REQUIREMENTS

A. The boiler shall be of the conventional, two drum, D-Type design, constructed in accordance with Section 1 of the ASME Boiler and Pressure Vessel Code for the specified design pressure and shall bear the ASME standard symbol.

1. Drums shall be fusion welded, radio-graphed and stress-relieved. They shall be complete with all necessary connections, a 12" x 16" manway opening in each head with cover and yokes, internal piping for feedwater, chemical feed, and continuous blowdown. The upper drum shall include adequate steam separating equipment to assure the specified steam quality. The lower drum shall include a slotted inverted channel to assure uniform blowoff. All internal fittings and pipe must be adequately supported and removable for maintenance purposes.

   a. Steam drum diameter shall not be less than __" I.D.

   b. Water drum diameter shall not be less than 24".

   c. Each steam drum shall be equipped with the proper connections for the following accessories:

      1. Steam outlet
      2. Flanged safety valves
      3. Feedwater inlet
      4. Continuous blowdown
      5. Feedwater regulator
      6. Auxiliary low water cutoff
      7. Water column
      8. Chemical feed
      9. Vent
      10. Sootblower

d. Each water drum shall be equipped with a flanged blowoff connection.

e. All connections larger than 2" shall be flanged.

2. All tubes shall be 2" O.D., electric resistance welded, and shall be designed and arranged to provide for natural circulation in the proper direction at all loads. Tubes of variable diameter, such as swaged tubes, shall not be permitted. No tube shall enter the lower drum below the horizontal drum centerline or enter the steam drum above the minimum water level. Tubes shall not have any reverse bends or "pockets" which would prevent complete drainage of the boiler through the lower blowoff opening. All tubes are to be rolled in holes drilled true and radially, to afford full parallel bearing in the drum plate. Each tube hole shall be serrated to assure the tightest possible mechanical joint. All tubes shall be a minimum of 0.105" wall thickness.

3. All tubes in the furnace shall be membrane finned construction except those in the area where the gases leave the furnace and enter the convection section. The outboard row in the convection section shall be membrane finned tubes except in the area where the flue gases leave the boiler. Fins shall be ¼"x 1" steel, fused continuously to opposite sides of the tubes by electric welding. Membrane finned construction which utilizes a fin-to-tube weld on only one side is not acceptable.

4. The steam generating units shall be provided with a 100% welded gas-tight enclosure. Refractory gas seals are not allowed. The seal shall be formed entirely by finned tube walls and intermediate headers, continuously seal-welded together forming a gas-tight water-cooled enclosure. The external casing shall be 12-gauge steel or corrugated aluminum and shall completely enclose the unit with the exception of the four drum heads. The drum heads shall be insulated in the field by others. The steam drum shall be insulated and cased with 12-gauge steel. The average surface temperature of the casing shall not exceed 50°F over ambient temperature with a surface wind velocity of two feet per second while the boiler is operating at full capacity.

5. All insulating materials shall be not less than first quality, as used in the best commercial practices, and shall conform substantially to the following:

a. Sides, roof, floor, front & rear walls of the steam generating unit are to be completely covered with a minimum thickness of 3 inches of 1000°F insulating blanket of the fiber glass or mineral wool type. Insulation over the top of the steam drum is to be a minimum of 3 inches thick 1000°F insulating blanket of the fiber glass or mineral wool type.

6. The steam generating unit shall be supported by steel base beams.

7. The exterior steel surfaces of each unit shall be completely cleaned by solvent cleaning, scraping, or grinding and have one (1) coat each of high heat resistant primer and finish coat. Corrugated aluminum parts of the outer casing (if applicable) need not be painted.

8. Each unit shall be equipped with the following appurtenances, all of which are to conform to the best standards of power plant practice.

   a. Observation Ports - Three(3) or more are to be located at strategic points in the furnace target wall. These ports are to be of a type to assure tight shutoff and permit lens change when the steam generating unit is in operation. The target wall observation ports and the burner register observation ports shall afford full furnace vision.

   b. Furnace Access - An access opening, 15" x 18" minimum other than the burner register, shall be provided to the boiler furnace area. The access opening shall be gasketed and shall have a 1/4" steel cover with handles and shall be secured properly for a gas tight seal.

   c. Convection Access - An access opening or openings shall be provided for inspection of the convection tube bank. The opening shall be furnished complete with insulated cover plate or plates, gasketing, handles, bolts, and nuts.

9. Each steam generator, as specified herein, shall be provided with the following boiler trim equipment. This equipment shall be factory-mounted, complete with integral connecting piping, valves, and fittings. All valves and control apparatus are to be designed for the specific application for which they are utilized in full compliance with the regulatory codes hereinbefore specified. Drain lines, as applicable, shall terminate with a valve 5 feet above operating floor level. If clearances do not permit shipment of all apparatus mounted on the unit, the subassemblies affected can be shipped loose for field mounting by others:

   a. Safety valves
   b. Blowoff valves
   c. Water column

      (1) The water column shall include an integral probe for low water fuel cutout, and high and low water bell alarm.

   d. Water gauge and gauge valves with chain and handles for floor level operation.
   e. Auxiliary low water cutoff

      (1) In addition to the safety device to be furnished with the water column, an auxiliary low water cutout assembly is to be furnished. The auxiliary low water cutout is to be of the float type.

   f. Continuous blowdown stop valve
   g. Continuous blowdown control valve
   h. Vent valve
   i. Chemical feed and check valve
   j. Steam gauge valve
   k. Main steam non-return valve
   l. Main steam stop valve
   m. Interconnecting spool piece with vent & drain valves

10. Each unit shall be furnished with a feedwater control system. The system shall include a three-valve block and bypass, and shall incorporate a control valve having a pressure drop of no more than 15 psig at design capacity.

   a. Feed stop valve
   b. Feed check valve
   c. Feedwater bypass valves

11. If heavy oil firing is required, an automatic valve-in-head type sootblower system is to be furnished, factory-mounted to the steam generating unit. Sootblower elements must be perpendicular to the tubes. Each boiler tube lane in the convection zone is to be cleaned by an element orifice. Systems employing alternate lane blowing are not acceptable. Each system shall include a chain-operated steam supply shutoff valve and drain valve. When present fuels do not require sootblowers, the unit shall be provided with sootblower wall boxes and bearings for future installation of elements and heads.

V. ECONOMIZER

Vendor shall furnish one (1) economizer per boiler to recover the waste heat from the hot boiler exhaust gas. The economizer unit shall be a packaged, rectangular, unit that is double-cased and insulated. The economizer internal casing shall be 10-gauge, seal-welded (gas tight) steel, externally insulated with 2" of heavy-duty blanket insulation and externally cased with corrugated lagging. The gas side connections on the economizer shall be plate flange type with drilling for bolt holes to align with adjacent components. The water side connections shall be flanged. The economizer shall include vent and drain connections and appropriate closures. The unit shall incorporate lifting lugs to facilitate loading & unloading and shall be designed so that access for tube inspection can be achieved by either access doors in the economizer or from adjacent ductwork incorporating access doors.

The economizer shall be a horizontal tube, counter-current flow design arranged to allow the boiler exhaust to travel vertically upward and the feedwater to flow vertically downward. The economizer shall not be allowed to steam and shall be capable of operating at 100% load without having to bypass any flue gas or feedwater. Tube arrangement shall be square pitch, to allow for ease of cleaning with lane sootblowers (applicable if firing fuel oils). Tube returns shall not be finned in order to ensure ease of maintenance.

Tube diameter shall be 2" and the unit shall be completely drainable by gravity. Tube material shall be SA-178A. Tubes shall be bare or utilize extended (finned) surface, depending on the fuel(s) being fired and good engineering practice to avoid clogging. Maximum fin density shall be ____ fins/inch. The tube sheets shall contact only the fin tips without contacting the actual tube wall itself.

Header material shall be SA106B and use RFWN flanged connections. Header wall thickness and flange rating shall be dependent on economizer design pressure. Plastic-lined headers shall not be acceptable. Tube-to-header connections shall be all welded. Bonded fittings or compression fittings shall not be acceptable and are not permitted under ASME Section 1 guidelines.

All pressure parts shall conform to the applicable provisions of the current ASME Section 1 code. The economizer shall be properly named and code stamped. The design pressure of the economizer shall exceed the design pressure of the boiler.

The following equipment shall also be supplied as part of the complete economizer assembly package:

1. Structural support steel.
2. Interconnecting boiler-to-economizer transition ductwork (insulation in the field by others). Provide expansion joints as required.
3. Sootblower assembly if firing heavy oils (steam supply shut-off valve & steam piping by others).
4. Interconnecting feedwater piping from economizer feedwater outlet to boiler feedwater inlet.
5. Temperature gauges with thermowells for local measurement of gas and water inlet & outlet temperatures.
6. Ductwork to transition from economizer gas outlet to stack and/or flue gas exhaust ductwork.

VI. TESTS

A. Prior to shipment, the manufacturer shall perform the following tests as applicable to the steam generating units:

1. Before being enclosed in the setting, the pressure vessels shall receive a hydrostatic test as required by Section 1 of the ASME Boiler and Pressure Vessel Code. The manufacturer shall furnish properly executed ASME Manufacturer's Data Sheets as required by ASME code.

VII. STEAM GENERATOR FIELD ENGINEERING SERVICES

A. The steam generating unit manufacturer shall furnish, at their per diem rate, the services of a competent service engineer to supervise and assist in effecting boiler boil-out, boiler/burner startup, adjustments, testing, and instruction of operating personnel.

1. Manufacturer's proposal shall state the predicted period of time incorporated in the offering for field engineering services.

VIII. LOW-NOX BURNER

A. GENERAL

This section addresses the design, fabrication, testing and supply of low-NOx packaged burner system(s), suitable for installation on __PPH packaged watertube boilers.

The packaged burner equipment shall be designed to fire natural gas or #2 oil (or #6 oil or other) and provide sufficient heat input for the maximum boiler capacity and pressure as outlined below. The burner will also be designed to minimize NOx and CO emission such that the NOx and CO stated in Section C will not be exceeded. If flue gas recirculation (FGR) is required in addition to low NOx burners to meet the specified performance, the vendor shall specify the amount and type of FGR (forced or induced) required.

In addition, the burner excess oxygen levels at full load shall not exceed those stated in Section C.

The packaged burner shall include all equipment to deliver a functional burner system. All functional components such as burner, windbox, ignitor, forced-draft fan, fuel trains, burner management system & combustion/feedwater controls shall be provided and arranged by the boiler vendor to assure component compatibility, unit responsibility & a single-source responsibility.

All components shall be factory-mounted, wired and tested, as far as practicable, at the burner manufacturer's factory in order to minimize field installation and start-up time.

The packaged burner system shall be designed in strict accordance with the applicable code requirements of NFPA 85, latest edition.

Burner package shall be supplied by CB-NATCOM.

B. DESIGN CONDITIONS

Fuel Data

Fuel type	_____
Fuel HHV	_____ BTU/lb
Fuel pressure available	_____ PSIG
Viscosity	_____ (if applicable)
Ignitor fuel	_____ Natural gas
	____ Propane gas
Fuel analysis	Gas : % per volume
	Oil : % per weight

(*An analysis must be provided in order to guarantee emissions*)

C. PERFORMANCE GUARANTEES

The packaged burner equipment shall guarantee as a minimum the performance parameters as outlined below. If the vendor fails to meet any of its performance guarantees, the vendor, at his own expense, shall modify, adjust or replace all related components, until all performance guarantees are met.

1. The NOx emission shall not exceed _____ lb/MMBTU when firing natural gas and shall not exceed _____ lb/MMBTU when firing oil. These limits shall not be exceeded from 25-100% load.

2. The CO emissions shall not exceed _____ lb/MMBTU when firing natural gas or oil. These limits shall not be exceeded from 25-100% load.

3. The burner excess air level from 50% to 100% firing rate shall not exceed ___ % for both natural gas and oil.

4. The burner turndown capacity shall not be less that ___:1 when firing natural gas and not be less that ___:1 when firing oil. The NOx and CO emissions shall not exceed their guaranteed values throughout the gas and oil operating range.

5. The burner shall fire over the entire operating range with no flame impingement on the side or rear heating surfaces.

D. EQUIPMENT REQUIREMENTS

1. GENERAL

The following will describe the minimum equipment requirements for each component of the low NOx packaged system:

The low NOx burner, complete with oil and gas burner units, will be mounted and dimensionally checked at the factory prior to shipment. If shipping conditions permit, the forced draft fan and motor shall also be factory-mounted. Main fuel control and pressure regulating valves will be supplied by the vendor but shipped loose for field installation by others.

2. LOW NOx BURNER ASSEMBLY

The burner assembly will be a proven design developed specifically for Low-NOx emissions. Basis of design shall be the CB-Natcom burner.

The burner shall be an axial flow type based on low to moderate swirling air jet aerodynamics. It shall use intensive and on-line adjustable fuel staging to control and minimize NOx formation. It shall use a combination of swirl and central core bluff-body effect to stabilize the flame. A preset ratio of tangential to axial momentum shall be used to effectively produce the required flame shape for a given furnace geometry. The flame shape and concentration properties within the furnace confinement shall be determined by appropriate computer simulation.

The gas burner shall be a low NOx lance-style spud design, with all gas lances mounted to an external gas manifold assembly located outside the windbox. The gas lances shall be externally removable for service and cleaning without having to enter the windbox or boiler and shall be removable while the burner is firing oil, thus not requiring the boiler to be shut down. Gas burner designs that utilize manifolds located inside the windbox are not acceptable due to potential risk associated with eventually undetectable gas leakage. Each of the gas injectors shall be fully adjustable on-line for flow, injection angle rotation and axial translation to generate an efficient staged fuel combustion that can minimize NOx and CO formation within the constraint of the furnace boundary and physical environment.

The burner throat shall be fully metallic and straight cylindrical for maximum air-cooling effect. No divergent refractory throat that results in loss of air mixing velocity and that leads the air flow to widen at burner outlet and cause flame impingement on side walls will be accepted.

The oil atomizer shall be of the non pre-mix type using constant differential steam to oil pressure. The oil injector internal atomizing steam and oil orifices shall also be adjustable by the sole replacement of a spacer washer. This allows for the adaptation of the penetration of the steam atomized oil jets in the combustion air to quickly reach optimum performance for the given fuel oil. With these unique adaptability features, required combustion performances can be easily obtained upon start-up, with no boiler downtime. The burner vendor shall include and describe all tools required to perform oil tip cleaning.

The burner front plate shall be of sufficient size to accommodate openings with carrier sleeves for each of the oil units, ignitor and gas lances. Openings for two sight ports each with sight glass and one scanner port with scanner mount complete with cooling air connection and scanner ball swivel assembly shall be supplied.

3. IGNITORS

The ignitor shall be gas-electric and provide sufficient ignition heat input using either natural gas or propane.

The ignitor shall meet NFPA Class 3 requirements.

The ignitor shall be supplied complete with flexible steel, braided gas hose and flexible electrical harness assembly connecting the ignitor spark plug to the ignition transformer. The ignitor transformer shall be 6,000 volts maximum to minimize the occurrence of high voltage short circuits and be mounted in a NEMA 12 enclosure located on the windbox.

The ignitor shall use combustion air from the burner forced draft fan and not require an independent source of combustion air. No flame rods shall be used for ignitor flame detection.

4. WINDBOX

The windbox assembly shall be a low velocity plenum of adequate aerodynamic design to achieve optimum air distribution at the burner inlet to insure flame axial symmetry. Computer simulation showing the air velocity vector distribution to be within 10% from the mean with a swirl number less than 0.01 at the burner inlet shall be supplied with the burner technical documentation.

The windbox shall be manufactured with ¼" ASTM A-36 steel plate, properly stiffened with heavy duty square tubes. It shall be fitted with lifting lugs and contain an opening with mounting studs to accept the burner front plate.

5. FUEL PIPING TRAINS

The oil, atomizing steam, ignition and main gas piping trains shall be factory assembled, wired and tested, and shipped as integral parts of the burner windbox assembly. These trains shall include all steam traps, tubing to limit devices, and all necessary fittings. The piping shall be arranged in a neat and accessible manner. These trains must fully comply with NFPA 8501.

The train shall be assembled and tested at the factory, and while it is to be shipped as a separate assembly, field installation shall only require bolting a flange connection and electrical connection from pre-wired valves to terminal strips.

Fuel oil and atomizing steam piping shall be Schedule 80 with 300 lb. malleable iron screwed fittings; valves shall be cast iron and bronze with threaded ends. Main and ignitor gas piping shall be Schedule 40 with 150 lb. Malleable iron fittings, 2" and under, aluminum body vent valve, threaded 2" and under, flanged 2-1/2" and over. The ignitor valves shall be brass and aluminum with threaded ends.

6. PILOT GAS PIPING TRAIN

One (1) pilot gas piping train shall be provided with the following major components pre-piped and installed on the windbox. Pilot gas system shall be designed for uninterrupted natural gas supply pressure of _____ PSIG. Equipment shall include, but no be limited to, the following:

Two (2)	Manual shut-off valve
One (1)	Pilot gas pressure regulator
Two (2)	Electrically operated shut-off valves
One (1)	Electrically operated vent valve between both shut-off valves
One (1)	2-1/2" Pilot gas pressure gauge with shut-off cock
One (1)	"Y" type strainer
One (1)	Flexible hose

7. MAIN FUEL GAS PIPING TRAIN

One (1) fuel gas piping train with the following major pre-piped components installed on the windbox. Fuel gas piping system shall be designed for use with natural gas supplied to the regulator at ____ PSIG.

Two (2)	3-1/2" burner pressure gauges with shut-off cock
One (1)	Leak test cock
One (1)	Low fuel gas pressure switch
One (1)	High fuel gas pressure switch
Two (2)	Electrically operated shut-off valves
One (1)	Electrically operated vent valve between both shut-off valves
One (1)	Flow control valve
One (1)	Manual shut-off cock
One (1)	Flexible hose

8. MAIN FUEL OIL PIPING TRAIN

One (1) fuel oil piping train with the following major pre-piped components installed on the windbox. Fuel oil piping system shall be designed for use with oil supplied to the regulator at ____ PSIG.

Two (2)	Manual shut-off valve
One (1)	"Y" type strainer
One (1)	Oil pressure regulator
Two (2)	3-1/2" pressure gauges with shut-off cock
One (1)	Low oil pressure switch
One (1)	Electrically operated oil shut-off valve
One (1)	Flow control valve
One (1)	Flexible hose

9. MAIN ATOMIZING STEAM PIPING TRAIN

One (1) steam atomizing piping train with the following major pre-piped components installed on the windbox. Atomizing piping system shall be designed for use with saturated steam supplied to the regulator at _____ PSIG.

Two (2)	Atomizing manual shut-off valve
One (1)	"Y" type strainer
One (1)	Steam trap with isolation and bypass valves
Two (2)	3-1/2" pressure gauges with shut-off cock
One (1)	Electrically operated steam shut-off valve
One (1)	Low atomizing steam pressure switch
One (1)	Atomizing steam pressure regulating valve
One (1)	Flexible hose

10. BURNER MANAGEMENT SYSTEM

Provide an electronic solid state automatic, non-recycling Burner Management System (BMS), arranged to comply with NFPA-8501, I.R.I., and Factory Mutual Standards. The system shall be completely installed in a NEMA-12 cabinet mounted on the burner windbox. The Burner Management System shall operate from the 120 V, 1 PH, 60 Hz power source. The electronic Burner Management System shall be fully automatic and include a pre-wired factory tested microprocessor based Flame Safeguard System *Fireye* E110/E300 or equal. The controls shall be fail-safe where component failure within the control or presence of actual or simulated flame prior to start-up will prevent burner operation. The following major components shall be completely installed in the Burner Management cabinet unless noted:

One (1)	Flame control with mounting rack
One (1)	Control circuit breaker
Three (3)	Momentary pushbuttons - Sequence Start - Alarm Acknowledge - Lamp Test
One (1)	Emergency Stop (Mushroom red button)
One (1)	Fan On-Off-Auto selector switch
One (1)	Fuel selector switch
One (1)	Water level alarm bell
One (1)	Limit or Flame failure horn

First out annunciator shall display a minimum of the following:

Power on	Purge in progress
Ignitor on	Fuel gas on
Flame failure	FD fan failure
Low combustion air	High water cut-off
Low water alarm	Low water cut-off
High fuel gas pressure	Low fuel gas pressure
Low pressure instrument air	Low oil pressure
Low atomizing steam pressure	High steam pressure cut off

Miscellaneous Burner Management equipment completely installed on burner windbox.

One (1)	Fan air pressure switch (Minimum air flow)
One (1)	Purge air flow switch
One (1)	UV flame scanner – Fireye or equal

11. COMBUSTION CONTROLS

The combustion control shall be a fully-metered, cross-limited type supplied with instrumentation shipped loose for mounting in customer's piping in the field. The steam pressure controller shall be a multi loop type and shall be installed in the NEMA-12 BMS control panel. The steam pressure transmitter shall be shipped loose for field mounting.

12. FORCED DRAFT FAN

The F.D. fan shall be provided with all required dampers to control combustion air. The fan shall be a non-overloading, centrifugal type 1,800 RPM unit with grease-lubricated antifriction bearings and a direct-connected TEFC ____ V / 3 PH / 60 Hz motor drive. The fan sizing shall have a minimum margin of 10% volume and 21% static pressure above design requirements at an ambient temperature of ____ F.

ATTACHMENT C.1-4

COOLING TOWER SPECIFICATION SHEETS

Cooling Tower Institute
Inquiry Bid Form

Mechanical Draft Cooling Tower

CUSTOMER	MANUFACTURER
ABENCS Solar Plant Phoenix, AZ	**Cooling Tower Depot, Inc.** 651 Corporate Circle Golden, CO 80401 Phone (720) 746-1234 Fax (720) 746-1110
Specification No:	Proposal No.:
Inquiry No:	Date: Orig. August 17, 2007
Date: Orig. Rev	Date: Rev. 4-Jan-08

All data set forth herein is in accordance with definitions and standards published by the Cooling Tower Institute.

GENERAL	
Selection	HEAVY DUTY INDUSTRIAL COUNTERFLOW
Tower Model	CFF-544834-8I-36
Type	INDUCED DRAFT COUNTERFLOW
DESIGN & OPERATING CONDITIONS	
Circulating Water Flow, u.s. gpm/	90,000
Hot (inlet) Water Temp., deg F	92.1
Cold (outlet) Water Temp., deg F	80.3
Wet Bulb Temp., deg F Inlet	72.0
Ambient	
Tower Pump Head, ft.	29.5
Total Fan B.H.P., (Driver Output)	230.60 X 8.00 = 1,844.80
Drift Loss, % of circulating flow	0.001
Evaporation Loss (at design), %	1.55
Design Wind Load, lbs./sq. ft.	PER IBC
Mi./hr.	
Design Seismic Load % G	PER IBC
Tower Site (ground level, roof, etc.)	GROUND LEVEL
Elevation Above Sea Level, ft.	690.00
Tower Exposure	UNOBSTRUCTED
STRUCTURAL DETAILS	
Number of Cells	6
Fans per Cell	1
Total Number of Fans	6
Nominal Cell Dimensions, L x W	54 X 48 = 2,592
Overall Tower Dimensions, L x W	432 X 48 = 20,736
Height - Basin Curb to Fan Deck, ft.	34
Fan Stack Height, ft.	10
Overall Tower Height, ft.	44
Inside Basin Dimensions, L x W	438 X 54 = 23652
Column Extensions, Perimeter, ft.	4
(below basin curb) Interior, ft.	4
Anchorage	PERIMETER

Cooling Tower Institute
Inquiry Bid Form

Mechanical Draft Cooling Tower

Proposal No.:

STRUCTURAL DETAILS (Continued)	
Hot Water Inlet - Number	6
Nominal Diameter, in.	30
Description	TERMINATES ONE FOOT OUTSIDE OF TOWER
	WITH STD ANSI FLANGE
Height Inlet Above Basin Curb, ft.	23.00
Access to Top of Tower	ONE FIBERGLASS LADDER AND ONE FIBERGLASS
	STAIR
Shipping Weight, lbs.	910,000
Operating Weight, lbs.	1,200,000
MATERIALS OF CONSTRUCTION	
Framework Members	HIGH STRENGTH PULTRUDED FIBERGLASS
Casing	12 OZ. FIRE RETARDANT FIBERGLASS
Fill Media	10 MIL PVC FILM PACK FILL
Fill Support	HIGH STRENGTH PULTRUDED FIBERGLASS
Drift Eliminators	15 MIL CELLULAR PVC
Spacer	PVC
Fan Stacks	FIBERGLASS
Louver Material	12 OZ. FIRE RETARDANT FRP
Partitions	12 OZ. FIRE RETARDANT FIBERGLASS
Fan Deck	NON-SKID FRP
Water Distribution - Type	LOW PRESSURE DOWNSPRAY
Material	FRP HEADER/PVC LATERALS
Lumber Pre-Treatment	N/A
Type of Treatment	N/A
Items Treated	N/A
Splashers or Spray Nozzles	POLYPROPYLENE
Stairway and Handrail	FIBERGLASS
Structural Connectors	304 SERIES SS
Ring Joint Connectors	304 SERIES SS
Bolts, Nuts, Washers	304 SERIES SS
Anchor Connectors	304 SERIES SS
Screws	304 SERIES SS
Mechanical Equipment Support	Galvanized Steel
Anchor Bolts - Material	304 SERIES SS
Furnished by	BY CTD
Cold Water Basin - Material	CONCRETE
Furnished by	BY OTHER
Basin Accessories, by Mfg.	NONE
MECHANICAL EQUIPMENT	
Fans	
Number	6
Type or Model	APT-36H-7
Manufacturer	HUDSON PRODUCTS
Diameter, ft.	36
Number of Blades	7

Cooling Tower Institute
Inquiry Bid Form

Mechanical Draft Cooling Tower

Proposal No.:

MECHANICAL EQUIPMENT (Continued)	
Fans	
Fan Speed, rpm	102.7
Tip Speed, fpm	11609
BHP per Fan, Driver Output	230.6
Blade Material	FIBERGLASS REINFORCED VINYL ESTER
Hub Material	EPOXY COATED
Total Static Pressure, in H2O	0.614
Velocity Pressure, in H2O	0.142
Air Delivery per Fan, ACFM	1,310,000
Fan Static Efficiency, %	65.0
Fan Total Efficiency, %	80.0
Speed Reducer	
Number	6
Type	RIGHT ANGLE, SPIRAL BEVEL
Model	1713
Manufacturer	AMARILLO
Reduction Ratio	17.34:1
AGMA Mechanical H.P. Rating	544
Service Factor at Rated H.P. of Driver	2.18
Number of Reductions	2
Drive Shaft	
Number	6
Type	FULL FLOATING NON-LUBRICATED
Model	LRX650.625
Manufacturer	ADDAX
Rated HP	520
Drive Shaft Material	COMPOSITE
Coupling Material	316 STAINLESS STEEL
Driver	
Number	6
Kind	ELECTRIC MOTOR
Type	TOTALLY ENCLOSED FAN COOLED (TEFC)
	ONE SPEED
Manufacturer	BALDOR, TOSHIBA, US MOTOR OR EQUAL
Full Load Speed, RPM	1800
Electric Characteristics - phase/cycles/volts	3/60/480
Rated HP	250
ADDITIONAL DATA:	

CFF-544834-81-36		

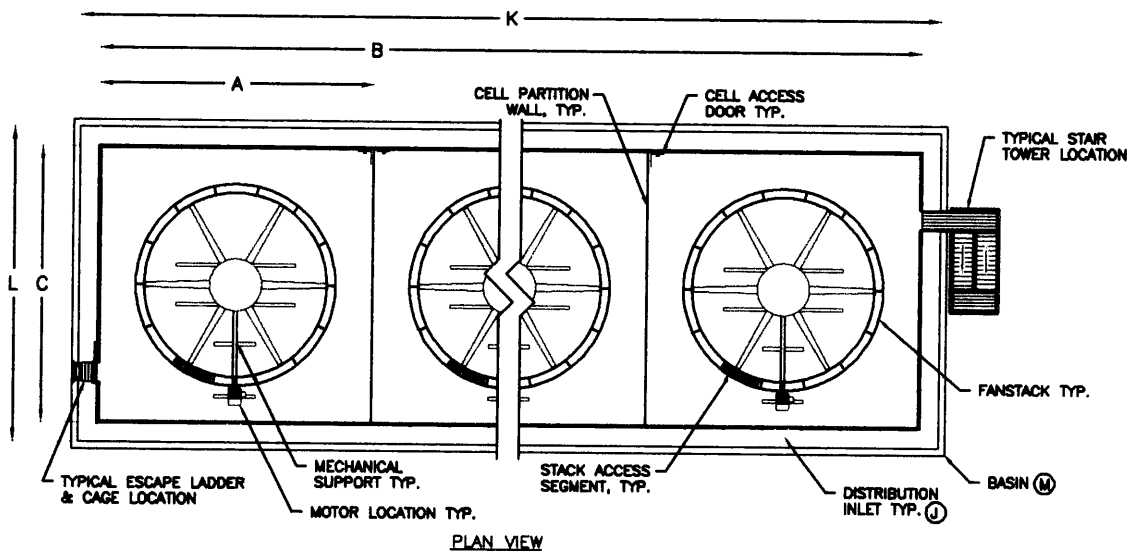

PLAN VIEW

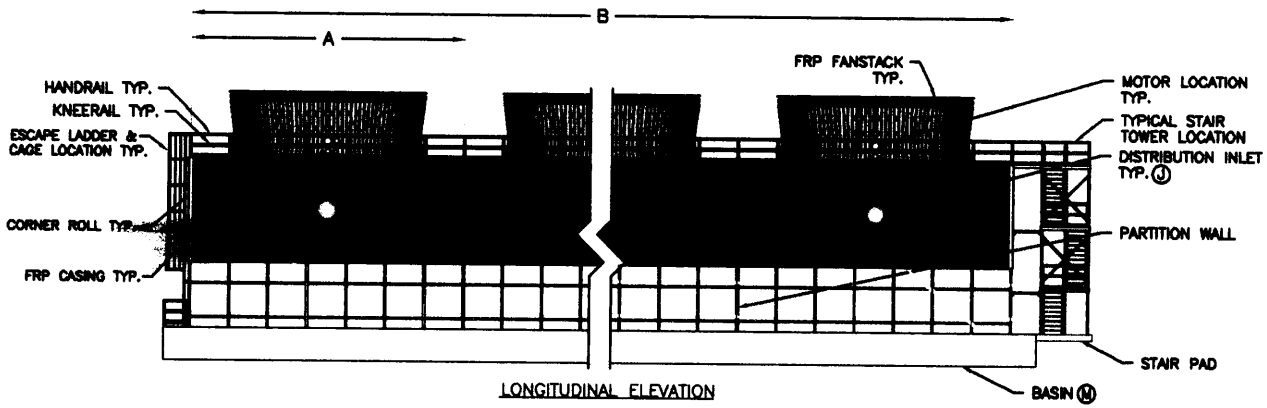

LONGITUDINAL ELEVATION

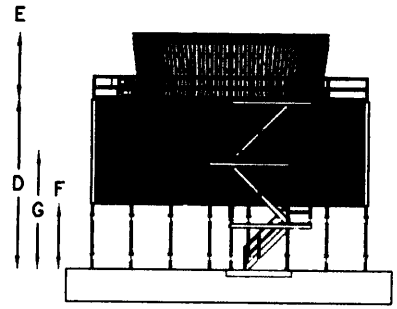

TRANSVERSE ELEVATION

COOLING TOWER DEPOT, INC.

DRAWING NAME: GENERAL ARRANGEMENTS

PROJECT NAME: ABENCS - PHOENIX, AZ

PROPOSAL NO.

SCALE: NTS

REV: C

DATE: 1/04/08

NOTES:

ATTACHMENT C.1-5

DIESEL FUEL ANALYSIS DATA

Typical Diesel Fuel Analysis Data

Parameter	Average Data
Carbon %	85.86
Hydrogen %	13.35
Oxygen %	0.65
Nitrogen %	0.097
Sulfur %	0.0015 – 0.05
Ash %	0.01
Btu/gal (HHV)	~139,000
Lbs/gal	~6.87
Data derived from AB2588 fuel testing for sources in the South Coast AQMD. Total number of samples used for averages = 10.	

ATTACHMENT C.1-6

NATURAL GAS FUEL ANALYSIS DATA

Typical Natural Gas Composition

Component	Molar Percent (%)
Methane, CH_4	96.11
Ethane, C_2H_6	1.80
Propane, C_3H_8	0.30
Butane, C_4H_{10}	0.10
Pentane, C_5H_{12}	0.00
Hexane, C_6H_{12}	0.03
Carbon Dioxide, CO_2	1.24
Nitrogen, N_2	0.04
Total	100.00
Sulfur (grains per 100 dry standard cubic feet (dscf))	~0.20
Higher Heating Value (Btu/scf)	~1,020 – 1,025

ATTACHMENT C.1-7

HTF MSDS

Solutia Inc.

Material Safety Data Sheet

1. PRODUCT AND COMPANY IDENTIFICATION

Product name: THERMINOL® VP1 Heat transfer fluid

Reference Number: 000000000211 Date: 05/16/2006

Company Information:

United States:
Solutia Inc.
575 Maryville Center Drive, P.O. Box 66760
St. Louis, MO 63166-6760
Emergency telephone: Chemtrec: 1-800-424-9300
International Emergency telephone: Chemtrec: 703-527-3887
Non-Emergency telephone: 1-314-674-6661

Canada:
Solutia Canada Inc.
6800 St. Patrick Street
LaSalle, PQ H8N 2H3
Emergency telephone: CANUTEC: 1-613-996-6666
Non-Emergency telephone: 1-314-674-6661

Mexico:
Solutia MEXICO, S. DE R.L. DE C.V.
Prol. Paseo de la Reforma 2654
Local 501, Piso-5
Col. Lomas Altas
11950 Mexico, D.F.
Emergency telephone: SETIQ: (in Mexico) 01-800-002-1400
Non-Emergency telephone: (in Mexico) 01-55-5259-6800

Brazil:
Solutia Brazil Ltd.
Avenue Carlos Marcondes, 1200
CEP: 12241-420-São José dos Campos/SP-Brazil
Emergency telephone: 55 12 3932 7100 (PABX)
Non-Emergency telephone: 55 11 3365 1800 (PABX)

2. HAZARDS IDENTIFICATION

EMERGENCY OVERVIEW

Form:	liquid
Colour:	clear to colourless
Odour:	characteristic

WARNING STATEMENTS

WARNING!
Causes eye irritation
Causes skin irritation
Causes respiratory tract irritation
Contains material which can cause liver and nerve damage

POTENTIAL HEALTH EFFECTS

Likely routes of exposure:	eye and skin contact inhalation
Eye contact:	Highly irritating to eyes.
Skin contact:	Highly irritating to skin. Prolonged or repeated skin contact may result in irritant dermatitis.
Inhalation:	Severely irritating if inhaled. No more than slightly toxic if inhaled. Significant adverse health effects are not expected to develop under normal conditions of exposure.
Ingestion:	No more than slightly toxic if swallowed. Significant adverse health effects are not expected to develop if only small amounts (less than a mouthful) are swallowed.
Signs and symptoms of overexposure:	headache fatigue nausea/vomiting indigestion abdominal pain tremors
Target organs/systems:	May cause liver damage May cause nerve damage

Refer to Section 11 for toxicological information.

3. COMPOSITION/INFORMATION ON INGREDIENTS

Components	CAS No.	Average concentration	Concentration range	Units
diphenyl ether	101-84-8	73.5		%
biphenyl	92-52-4	26.5		%

4. FIRST AID MEASURES

If in eyes:	Immediately flush with plenty of water for at least 15 minutes. If easy to do, remove any contact lenses. Get medical attention. Remove material from skin and clothing.
If on skin:	Immediately flush the area with plenty of water. Remove contaminated clothing. Wash skin gently with soap as soon as it is available. Get medical attention. Wash clothing before reuse.
If inhaled:	Remove patient to fresh air. If not breathing, give artificial respiration. If breathing is difficult give oxygen. Remove material from eyes, skin and clothing.

If swallowed: Immediate first aid is not likely to be required.
A physician or Poison Control Center can be contacted for advice.
Wash heavily contaminated clothing before reuse.

5. FIRE FIGHTING MEASURES

Fire point: 127 C

Hazardous products of combustion: carbon monoxide (CO); carbon dioxide; hydrocarbons

Extinguishing media: Water spray, foam, dry chemical, or carbon dioxide

Unusual fire and explosion hazards: None known

Fire fighting equipment: Firefighters, and others exposed, wear self-contained breathing apparatus. Equipment should be thoroughly decontaminated after use.

Miscellaneous advice: This product is not classified as a fire-resistant heat transfer fluid. Precautions to avoid sources of ignitions should be taken.

6. ACCIDENTAL RELEASE MEASURES

Personal precautions: Use personal protection recommended in section 8.

Environmental precautions: Keep out of drains and water courses.

Methods for cleaning up: Contain large spills with dikes and transfer the material to appropriate containers for reclamation or disposal. Absorb remaining material or small spills with an inert material and then place in a chemical waste container. Flush spill area with water.

Refer to Section 13 for disposal information and Sections 14 and 15 for reportable quantity information.

7. HANDLING AND STORAGE

Handling
Avoid contact with eyes, skin and clothing.
Avoid breathing vapour or mist.
Keep container closed.
Use with adequate ventilation.
Wash thoroughly after handling.
Precautions against ignitions and fire should be taken with this product.
Heat transfer fluids are intended for INDIRECT heating purposes ONLY.
This product has not been approved for food grade use.

Emptied containers retain vapour and product residue. Observe all recommended safety precautions until container is cleaned, reconditioned or destroyed. Do not cut, drill, grind or weld on or near this container. The reuse of this material's container for non industrial purposes is prohibited and any reuse must be in consideration of the data provided in this material safety data sheet.

Storage
General: Stable under normal conditions of handling and storage.

8. EXPOSURE CONTROLS/PERSONAL PROTECTION

Airborne exposure limits: (ml/m3 = ppm)

THERMINOL® VP1	No specific occupational exposure limit has been established.
biphenyl	ACGIH TLV: 0.2 ml/m3 ; mist ; 8-hr TWA OSHA PEL: 0.2 ml/m3 ; 1.0 mg/m3 ; ; 8-hr TWA Mexican OEL: 0.2 ml/m3 ; 1.5 mg/m3 ; ; 8-hr TWA Mexican OEL: 0.6 ml/m3 ; 4 mg/m3 ; ; 15-min STEL
diphenyl ether	ACGIH TLV: 1 ml/m3 ; ; 8-hr TWA ACGIH TLV: 2 ml/m3 ; ; 15-min STEL OSHA PEL: 1 ml/m3 ; 7 mg/m3 ; ; 8-hr TWA Mexican OEL: 1 ml/m3 ; 7 mg/m3 ; ; 8-hr TWA Mexican OEL: 2 ml/m3 ; 14 mg/m3 ; ; 15-min STEL

Eye protection:	Wear safety goggles. Have eye flushing equipment available.
Hand protection:	Wear chemical resistant gloves. Consult the glove/clothing manufacturer to determine the appropriate type glove/clothing for a given application. See Solutia Glove Facts for permeation data.
Body protection:	Wear suitable protective clothing. Consult the glove/clothing manufacturer to determine the appropriate type glove/clothing for a given application. Wear full protective clothing if exposed to splashes. Wash contaminated skin promptly. Launder contaminated clothing and clean protective equipment before reuse. Wash thoroughly after handling. Have safety shower available at locations where skin contact can occur.
Respiratory protection:	Avoid breathing vapour or mist. Use approved respiratory protection equipment (full facepiece recommended) when airborne exposure limits are exceeded. If used, full facepiece replaces the need for face shield and/or chemical goggles. Consult the respirator manufacturer to determine the appropriate type of equipment for a given application. Observe respirator use limitations specified by the manufacturer.
Ventilation:	Provide natural or mechanical ventilation to control exposure levels below airborne exposure limits. If practical, use local mechanical exhaust ventilation at sources of air contamination such as processing equipment.

Components referred to herein may be regulated by specific Canadian provincial legislation. Please refer to exposure limits legislated for the province in which the substance will be used.

9. PHYSICAL AND CHEMICAL PROPERTIES

Flash point:	110 C	Pensky-Martens closed tester
	124 C	Cleveland Open Cup

Autoignition temperature:	612 C	ASTM D-2155
Density:	1.06 g/cm3 @ 25 C	
Boiling point :	257 C	
Crystallising point :	12 C	
Water solubility:	~25 mg/l	

NOTE: These physical data are typical values based on material tested but may vary from sample to sample. Typical values should not be construed as a guaranteed analysis of any specific lot or as specifications for the product.

10. STABILITY AND REACTIVITY

Conditions to avoid:	All sources of ignition.
Materials to avoid:	Contact with strong oxidizing agents.
Hazardous reactions:	Hazardous polymerization does not occur.
Hazardous decomposition products:	None known;

11. TOXICOLOGICAL INFORMATION

This product has been tested for toxicity. Results from Solutia sponsored studies or from the available public literature are described below.

Acute animal toxicity data

Oral:	LD50 , rat, 2,050 mg/kg , No more than slightly toxic
Dermal:	LD50 , rabbit, > 5,010 mg/kg , Practically nontoxic after skin application in animal studies.
Inhalation:	LC50 , rat, 2.66 mg/l , 4 h, Toxic based on animal inhalation exposure studies.
Skin irritation:	rabbit , Slightly irritating to skin., 24 h
Repeat dose toxicity:	rat, , inhalation, 13 weeks, , Produced effects on body weight, serum enzymes and/or organ weights in repeat dose studies.
Repeat dose toxicity:	rat, , gavage, 26 weeks, , Produced effects on body weight, serum enzymes and/or organ weights in repeat dose studies. Effects only observed at very high dose levels.
Target organs affected	kidneys, liver, spleen
Repeat dose toxicity:	rat, , diet, subchronic, , Repeated oral exposure produced liver and kidney changes in animal models.
Target organs affected	liver, kidneys
Developmental toxicity:	rat, gavage, , No effects on offspring observed in laboratory animals in the presence of maternal toxicity.

Mutagenicity: No genetic effects were observed in standard tests using bacterial and animal cells.

Components

Data from Solutia studies and/or the available scientific literature on the components of this material which have been identified as hazardous chemicals under the criteria of the OSHA Hazard Communication Standard (29 CFR 1910.1200) or the Canadian Hazardous Products Act are discussed below.

biphenyl	Chronic exposure has been reported to cause headache, fatigue, nausea, indigestion, abdominal pain, tremor, central and peripheral nerve damage and liver injury. Slightly toxic following oral administration. Practically nontoxic after skin application in animal studies. Practically non irritating to skin (rabbit). Slightly irritating to eyes (rabbit). No mortality or signs of toxicity at the highest level achievable. Irritating to respiratory system in animal models. Produced effects on body weight, serum enzymes and/or organ weights in repeat dose studies. Produced no dermal sensitization (guinea pigs). No effects on offspring observed in laboratory animals in the presence of maternal toxicity. No genetic effects were observed in standard tests using bacterial and animal cells.
diphenyl ether	Predictive patch testing on human volunteers did not produce irritation or sensitization. Slightly toxic following oral administration. Practically nontoxic after skin application in animal studies. Slightly irritating to eyes (rabbit). Slightly irritating to skin (rabbit). Repeated exposure produced respiratory tract irritation in animal models. Repeated exposure produced eye irritation in animal models. No genetic effects were observed in standard tests using bacterial and animal cells.

12. ECOLOGICAL INFORMATION

Environmental Toxicity

Invertebrates	48 h, EC50	Water flea (Daphnia magna)	2.4 mg/l
Fish:	96 h, LC50	Rainbow trout (Oncorhynchus mykiss)	7.6 mg/l
	96 h, LC50	Fathead minnow (Pimephales promelas)	24 mg/l
Algae:	96 h, EC50	Algae (Selenastrum capricornutum)	1.3 mg/l

Biodegradation Modified SCAS (OECD 302A) Primary degradation 99 %

13. DISPOSAL CONSIDERATIONS

US EPA RCRA Status: This material when discarded may be a hazardous waste as that term is defined by the Resource Conservation and Recovery Act (RCRA), 40 CFR 261.24, due to its toxicity characteristic. This material should be analyzed in accordance with Method 1311 for the compound(s) below.

US EPA RCRA	D018	Compound/Characteristic:	BENZENE

hazardous waste number:

Disposal considerations: Incineration

Miscellaneous advice: This product meets the criteria for a synthetic used oil under the U.S. EPA Standards for the Management of Used Oil (40 CFR 279). Those standards govern recycling and disposal in lieu of 40 CFR 260 -272 of the Federal hazardous waste program in states that have adopted these used oil regulations. Consult your attorney or appropriate regulatory official to be sure these standards have been adopted in your state. Recycle or burn in accordance with the applicable standards.
Solutia operates a used fluid return program for certain fluids under these used oil standards. Contact your Sales Representative for details.
This product should not be dumped, spilled, rinsed or washed into sewers or public waterways.

14. TRANSPORT INFORMATION

The data provided in this section is for information only. Please apply the appropriate regulations to properly classify your shipment for transportation.

US DOT

Proper shipping name:	ENVIRONMENTALLY HAZARDOUS SUBSTANCE, LIQUID, N.O.S. *biphenyl*
Hazard Class:	9
Hazard Identification number:	UN3082
Packing Group:	Packing Group III
Transport label:	Class 9
Special provisions:	This material meets the definition of a marine pollutant.
Other:	Applies ONLY to containers with an RQ or for shipments in bulk via water transportation.

Canadian TDG

Other:	Not regulated for transport.

Reportable Quantity/Limit

US DOT RQ 100 lb *biphenyl*
Package size containing reportable amount: 377 lb

ICAO/IATA Class

Other:	See DOT Information

15. REGULATORY INFORMATION

All components are in compliance with the following inventories:	U.S. TSCA, EU EINECS, Canadian DSL, Australian AICS, Korean, Japanese ENCS, Phillipine PICCS, Chinese
Canadian WHMIS classification:	D2(A) - Materials Causing Other Toxic Effects D2(B) - Materials Causing Other Toxic Effects

SARA Hazard Notification:

Hazard Categories Under Title III Rules (40 CFR 370):	Immediate Delayed

Section 302 Extremely Hazardous Substances:	Not applicable
Section 313 Toxic Chemical(s):	biphenyl

CERCLA Reportable Quantity:

100 lbs biphenyl
For this/these chemicals, release of more than the Reportable Quantity to the environment in a 24 hour period requires notification to the National Response Center (800-424-8802 or 202-426-2675).

This product has been classified in accordance with the hazard criteria of the Canadian Controlled Products Regulation and the MSDS contains all the information required by the Canadian Controlled Products Regulation.

Refer to Section 11 for OSHA/HPA Hazardous Chemical(s) and Section 13 for RCRA classification.

Safety data sheet also created in accordance with Brazilian law NBR 14725

16. OTHER INFORMATION

Product use: Heat transferring agents

Reason for revision: Significant changes to the following section(s):, Section 1

	Health	Fire	Reactivity	Additional Information
Suggested NFPA Rating	2	1	0	
Suggested HMIS Rating:	2	1	0	G

Prepared by the Solutia Hazard Communication Group. Please consult Solutia @ 314-674-6661 if further information is needed.

TM, ® is a registered trademark of Solutia Inc.
SOLUTIA is a trademark of Solutia Inc.
Responsible Care® is a registered trademark of the American Chemistry Council.

Although the information and recommendations set forth herein (hereinafter "Information") are presented in good faith and believed to be correct as of the date hereof, Solutia Inc. makes no representations as to the completeness or accuracy thereof. Information is supplied upon the condition that the persons receiving same will make their own determination as to its suitability for their purposes prior to use. In no event will Solutia Inc. be responsible for damages of any nature whatsoever resulting from the use of or reliance upon Information. NO REPRESENTATIONS OR WARRANTIES, EITHER EXPRESS OR IMPLIED, OF MERCHANTABILITY, FITNESS FOR A PARTICULAR PURPOSE OR OF ANY OTHER NATURE ARE MADE HEREUNDER WITH RESPECT TO INFORMATION OR THE PRODUCT TO WHICH INFORMATION REFERS.

Technical Bulletin 7239115B
(Supersedes 7239115A)

THERMINOL® VP-1

Heat Transfer Fluid by **Solutia**

Vapor Phase/ Liquid Phase Heat Transfer Fluid

54 °F to 750 °F

+400 °C
+700 °F
+350 °C
+600 °F
+300 °C
+500 °F
+250 °C
+400 °F
+200 °C
+150 °C +300 °F
+100 °C
+200 °F
+50 °C
+100 °F
LIQUID USE RANGE
0 °C
0 °F
-50 °C
-100 °F

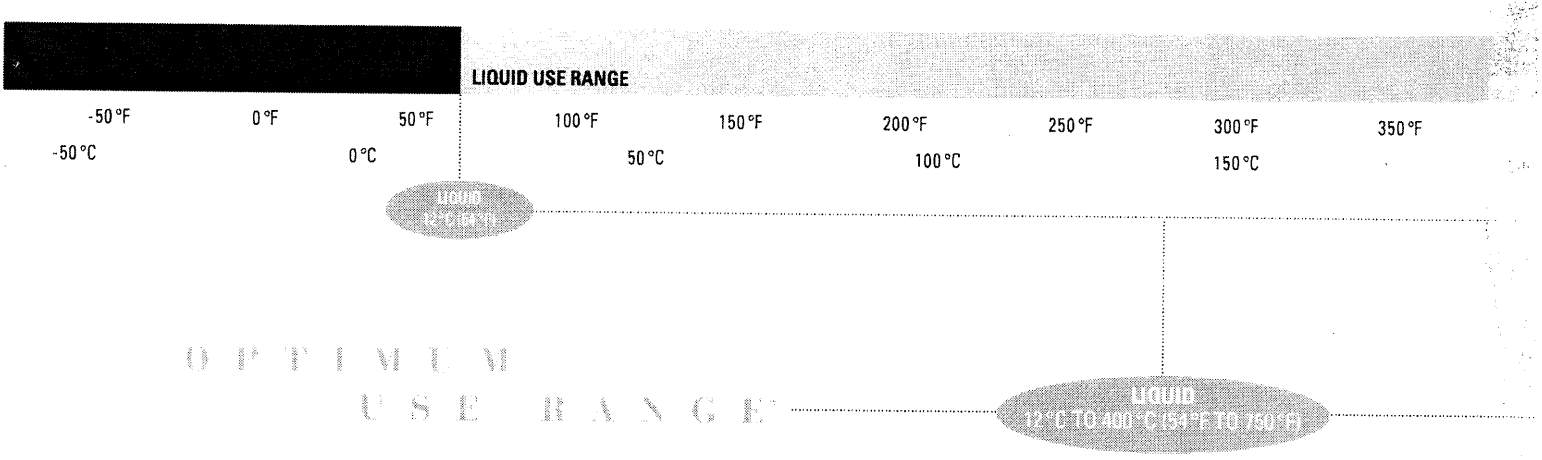

Therminol® VP-1 heat transfer fluid is specifically designed to meet the demanding requirements of vapor phase systems. It combines exceptional heat stability and low viscosity for efficient, dependable, uniform performance in a wide optimum use range of 12°C to 400°C.

THERMINOL® VP-1

Heat Transfer Fluid by **Solutia**

TABLE OF CONTENTS

Typical Properties	1
Liquid Properties of Therminol VP-1	2
Vapor Properties of Therminol VP-1	4
Physical and Chemical Characteristics	6
Fire Safety Considerations	6
Start-up and Shut-down Procedures	7
Toxicity and Handling	7

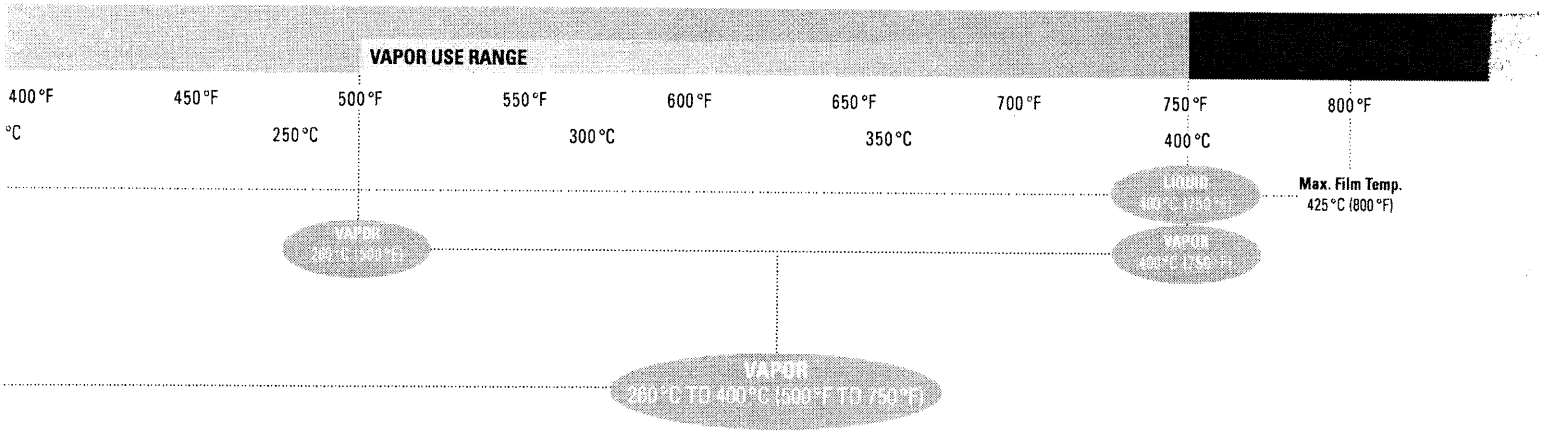

TYPICAL PROPERTIES*

Appearance	Clear, water-white liquid
Composition	Biphenyl and diphenyl oxide
Moisture Content, Maximum	300 ppm
Chlorine	< 10 ppm
Sulfur	< 10 ppm
Neutralization Number	< 0.2 mg KOH/g
Copper Corrosion (ASTM D-130)	<< 1 a
Flash Point, Open Cup (ASTM D-92)	124 °C (255 °F)
Closed Cup (Pensky-Martens)	110 °C (230 °F)
Fire Point (ASTM D-92)	127 °C (260 °F)
Autoignition Temperature (ASTM D-2155)	621 °C (1150 °F)
Kinematic Viscosity at 40 °C	2.48 mm^2/s (cSt)
at 100 °C	0.99 mm^2/s (cSt)
Density at 25 °C	1060 kg/m^3 (8.85 lb/gal)
Specific Gravity (60 °F/60 °F)	1.069
Coefficient of Thermal Expansion at 200 °C	0.000979/°C (0.000544/°F)
Average Molecular Weight	166
Crystallization Point	12 °C (54 °F)
Volume Contraction Upon Freezing	6.27%
Volume Expansion Upon Melting	6.69%
Surface Tension in Air at 25 °C	36.6 dyn/cm
Heat of Fusion	97.3 kJ/kg (41.8 Btu/lb)
Normal Boiling Point	257 °C (495 °F)
Heat of Vaporization at Maximum Use Temperature 400 °C	206 kJ/kg (88.7 Btu/lb)
Specific Resistivity at 20 °C	6.4×10^{11} ohm-cm
Optimum Use Range, Liquid	12 °C-400 °C (54 °F-750 °F)
Vapor	260 °C-400 °C (500 °F-750 °F)
Maximum Film Temperature	425 °C (800 °F)
Pseudocritical Temperature	499 °C (930 °F)
Pseudocritical Pressure	33.1 bar (480 psia)
Pseudocritical Density	327 kg/m^3 (20.4 lb/ft^3)

* These data are based upon samples tested in the laboratory and are not guaranteed for all samples. Write us for complete sales specifications for Therminol VP-1 fluid.

† Does not constitute an express warranty. See NOTICE on the last page of this bulletin.

LIQUID PROPERTIES OF THERMINOL

Temperature		Liquid Density			Liquid Heat Capacity		Liquid Enthalpy**	
°F	°C	lb/gal	lb/ft³	kg/m³	Btu/lb-°F [cal/g-°C]	kJ/kg·K	Btu/lb	kJ/kg
54	12	8.93	66.8	1071	0.364	1.52	0.0	0.0
60	16	8.91	66.7	1068	0.366	1.53	2.3	5.4
80	27	8.84	66.1	1059	0.374	1.57	9.8	22.7
100	38	8.76	65.5	1050	0.382	1.60	17.3	40.2
120	49	8.69	65.0	1041	0.390	1.63	25.0	58.2
140	60	8.61	64.4	1032	0.397	1.66	32.9	76.4
160	71	8.53	63.8	1023	0.405	1.69	40.9	95.1
180	82	8.46	63.3	1014	0.412	1.73	49.1	114.1
200	93	8.38	62.7	1004	0.420	1.76	57.4	133.4
220	104	8.31	62.1	995	0.427	1.79	65.9	153.1
240	116	8.23	61.6	986	0.435	1.82	74.5	173.1
260	127	8.15	61.0	977	0.442	1.85	83.3	193.5
280	138	8.07	60.4	967	0.449	1.88	92.2	214.2
300	149	7.99	59.8	958	0.457	1.91	101.2	235.3
320	160	7.91	59.2	948	0.464	1.94	110.4	256.7
340	171	7.83	58.6	939	0.471	1.97	119.8	278.4
360	182	7.75	58.0	929	0.478	2.00	129.3	300.5
380	193	7.67	57.4	919	0.485	2.03	138.9	322.9
400	204	7.59	56.8	909	0.492	2.06	148.7	345.6
420	216	7.50	56.1	899	0.499	2.09	158.6	368.6
440	227	7.42	55.5	889	0.506	2.12	168.7	392.0
460	238	7.33	54.9	879	0.514	2.15	178.9	415.7
480	249	7.25	54.2	868	0.521	2.18	189.2	439.8
495	257	7.18	53.7	860	0.526	2.20	197.0	457.4
500	260	7.16	53.5	857	0.528	2.21	199.7	464.1
520	271	7.07	52.8	847	0.535	2.24	210.3	488.8
540	282	6.97	52.2	835	0.542	2.27	221.1	513.8
560	293	6.88	51.4	824	0.549	2.30	232.0	539.2
580	304	6.78	50.7	812	0.556	2.33	243.0	564.9
600	316	6.68	50.0	800	0.563	2.36	254.2	590.9
620	327	6.58	49.2	788	0.570	2.39	265.5	617.2
640	338	6.47	48.4	775	0.578	2.42	277.0	643.9
660	349	6.36	47.6	762	0.586	2.45	288.7	671.0
680	360	6.25	46.7	749	0.594	2.48	300.5	698.4
700	371	6.13	45.9	734	0.602	2.52	312.4	726.2
720	382	6.01	44.9	720	0.612	2.56	324.6	754.4
740	393	5.88	43.9	704	0.622	2.60	336.9	783.1
750	399	5.81	43.4	696	0.627	2.62	343.1	797.6
760	404	5.74	42.9	687	0.633	2.65	349.4	812.2
780	416	5.59	41.8	670	0.646	2.70	362.2	842.0
800	427	5.43	40.6	651	0.662	2.77	375.3	872.4

* These data are based upon samples tested in the laboratory and are not guaranteed for all samples. Write us for complete sales specifications for Therminol VP-1 fluid.

** The enthalpy basis is liquid at the crystallizing point, 53.6 °F (12 °C).

† Does not constitute an express warranty. See NOTICE on the last page of this bulletin.

Liquid Thermal Conductivity			Liquid Viscosity			Vapor Pressure				Temperature	
Btu/ ft-hr-°F	kcal/ m-hr-°C	W/m·K	lb/ft-hr	cSt [mm²/s]	cP [mPa·s]	psia	mm Hg	kgf/cm²	kPa	°F	°C
0.0792	0.1179	0.1370	13.26	5.12	5.48					54	12
0.0790	0.1176	0.1367	11.84	4.58	4.89					60	16
0.0784	0.1167	0.1357	8.64	3.37	3.57	0.0004	0.019	0.00003	0.0026	80	27
0.0778	0.1158	0.1346	6.60	2.60	2.73	0.0010	0.054	0.00007	0.0071	100	38
0.0772	0.1148	0.1334	5.23	2.08	2.16	0.0026	0.134	0.00018	0.0178	120	49
0.0765	0.1138	0.1323	4.26	1.707	1.761	0.0059	0.307	0.00042	0.0409	140	60
0.0758	0.1128	0.1310	3.55	1.434	1.467	0.0127	0.655	0.00087	0.0874	160	71
0.0750	0.1117	0.1298	3.01	1.228	1.244	0.0254	1.31	0.00179	0.175	180	82
0.0743	0.1106	0.1285	2.59	1.067	1.071	0.0483	2.50	0.00339	0.333	200	93
0.0735	0.1094	0.1271	2.26	0.938	0.934	0.0872	4.51	0.00613	0.602	220	104
0.0727	0.1082	0.1257	1.990	0.834	0.823	0.151	7.81	0.0106	1.04	240	116
0.0719	0.1070	0.1243	1.769	0.749	0.731	0.251	13.0	0.0177	1.73	260	127
0.0710	0.1057	0.1228	1.585	0.677	0.655	0.404	20.9	0.0284	2.78	280	138
0.0701	0.1044	0.1213	1.430	0.617	0.591	0.629	32.5	0.0442	4.33	300	149
0.0692	0.1030	0.1197	1.298	0.566	0.537	0.951	49.2	0.0669	6.56	320	160
0.0683	0.1017	0.1181	1.185	0.522	0.490	1.40	72.6	0.0986	9.67	340	171
0.0674	0.1002	0.1165	1.086	0.483	0.449	2.02	105	0.142	13.9	360	182
0.0664	0.0988	0.1148	1.001	0.450	0.414	2.85	147	0.200	19.6	380	193
0.0654	0.0973	0.1131	0.926	0.421	0.383	3.94	204	0.277	27.2	400	204
0.0644	0.0958	0.1113	0.859	0.395	0.355	5.35	277	0.376	36.9	420	216
0.0633	0.0942	0.1095	0.800	0.372	0.331	7.15	370	0.503	49.3	440	227
0.0622	0.0926	0.1076	0.748	0.352	0.309	9.41	487	0.661	64.9	460	238
0.0611	0.0910	0.1057	0.700	0.333	0.290	12.2	631	0.858	84.2	480	249
0.0603	0.0897	0.1043	0.668	0.321	0.276	14.7	760	1.03	101	495	257
0.0600	0.0893	0.1038	0.658	0.317	0.272	15.6	808	1.10	108	500	260
0.0588	0.0876	0.1018	0.620	0.303	0.256	19.8	1020	1.39	136	520	271
0.0577	0.0858	0.0998	0.585	0.289	0.242	24.8	1280	1.74	171	540	282
0.0565	0.0841	0.0977	0.553	0.278	0.229	30.7	1590	2.16	211	560	293
0.0552	0.0822	0.0956	0.524	0.267	0.217	37.6	1940	2.64	259	580	304
0.0540	0.0804	0.0934	0.498	0.257	0.206	45.7	2360	3.21	315	600	316
0.0527	0.0785	0.0912	0.474	0.248	0.1958	55.1	2850	3.87	380	620	327
0.0514	0.0765	0.0890	0.451	0.241	0.1866	65.8	3400	4.63	454	640	338
0.0501	0.0746	0.0867	0.431	0.234	0.1781	78.1	4040	5.49	539	660	349
0.0488	0.0726	0.0844	0.412	0.227	0.1703	92.1	4760	6.47	635	680	360
0.0474	0.0705	0.0820	0.394	0.222	0.1630	108	5580	7.58	743	700	371
0.0460	0.0685	0.0796	0.378	0.217	0.1562	125	6490	8.82	865	720	382
0.0446	0.0663	0.0771	0.363	0.213	0.1500	145	7510	10.2	1000	740	393
0.0439	0.0653	0.0759	0.356	0.211	0.1470	156	8060	11.0	1070	750	399
0.0431	0.0642	0.0746	0.349	0.210	0.1441	167	8640	11.7	1150	760	404
0.0417	0.0620	0.0721	0.335	0.207	0.1387	191	9890	13.4	1320	780	416
0.0402	0.0598	0.0695	0.323	0.205	0.1336	218	11300	15.3	1500	800	427

VAPOR PROPERTIES OF THERMINOL

Temperature		Vapor Density		Vapor Heat Capacity		Heat of Vaporization		Vapor Enthalpy***	
°F	°C	lb/ft³	kg/m³	Btu/lb-°F [cal/g-°C]	kJ/kg·K	Btu/lb	kJ/kg	Btu/lb	kJ/kg
50	12			0.233	0.98	180.3	419.0	180.3	419.0
60	16			0.236	0.99	179.4	417.1	181.8	422.5
80	27	0.00001	0.00017	0.245	1.03	176.8	411.1	186.6	433.7
100	38	0.00003	0.00046	0.254	1.06	174.3	405.1	191.6	445.3
120	49	0.00007	0.00110	0.263	1.10	171.7	399.2	196.8	457.3
140	60	0.00015	0.00245	0.272	1.14	169.2	393.3	202.1	469.8
160	71	0.00032	0.00507	0.280	1.17	166.7	387.5	207.6	482.6
180	82	0.00061	0.00985	0.289	1.21	164.2	381.8	213.3	495.8
200	93	0.00113	0.0181	0.298	1.25	161.8	376.1	219.2	509.5
220	104	0.00199	0.0318	0.306	1.28	159.4	370.4	225.2	523.5
240	116	0.00334	0.0535	0.315	1.32	156.9	364.8	231.4	537.9
260	127	0.00541	0.0866	0.323	1.35	154.5	359.2	237.8	552.7
280	138	0.00846	0.136	0.331	1.39	152.2	353.7	244.3	567.9
300	149	0.0128	0.206	0.340	1.42	149.8	348.2	251.0	583.5
320	160	0.0189	0.303	0.348	1.45	147.4	342.7	257.9	599.4
340	171	0.0273	0.437	0.356	1.49	145.1	337.2	264.8	615.6
360	182	0.0384	0.615	0.363	1.52	142.7	331.7	272.0	632.2
380	193	0.0529	0.848	0.371	1.55	140.4	326.3	279.3	649.1
400	204	0.0717	1.15	0.379	1.58	138.0	320.8	286.7	666.4
420	216	0.0954	1.53	0.386	1.62	135.6	315.3	294.2	683.9
440	227	0.125	2.00	0.394	1.65	133.2	309.7	301.9	701.7
460	238	0.162	2.59	0.401	1.68	130.8	304.1	309.7	719.9
480	249	0.206	3.31	0.408	1.71	128.4	298.5	317.6	738.2
495	257	0.246	3.93	0.414	1.73	126.6	294.2	323.6	752.1
500	260	0.260	4.17	0.416	1.74	125.9	292.7	325.6	756.9
520	271	0.325	5.20	0.423	1.77	123.4	286.9	333.7	775.7
540	282	0.401	6.43	0.430	1.80	120.9	281.0	342.0	794.8
560	293	0.492	7.87	0.437	1.83	118.3	274.9	350.2	814.1
580	304	0.597	9.57	0.444	1.86	115.6	268.7	358.6	833.6
600	316	0.720	11.5	0.451	1.89	112.9	262.3	367.1	853.2
620	327	0.862	13.8	0.458	1.91	110.0	255.8	375.6	873.0
640	338	1.03	16.4	0.464	1.94	107.1	249.0	384.2	893.0
660	349	1.22	19.5	0.471	1.97	104.1	242.0	392.8	913.0
680	360	1.43	22.9	0.478	2.00	101.0	234.7	401.4	933.1
700	371	1.68	26.9	0.485	2.03	97.7	227.1	410.1	953.3
720	382	1.96	31.4	0.492	2.06	94.2	219.1	418.8	973.5
740	393	2.29	36.6	0.500	2.09	90.6	210.6	427.5	993.7
760	404	2.47	39.5	0.504	2.11	88.7	206.2	431.9	1003.8
760	404	2.66	42.6	0.508	2.12	86.8	201.7	436.2	1013.9
780	416	3.08	49.4	0.516	2.16	82.6	192.1	444.9	1034.0
800	427	3.57	57.2	0.526	2.20	78.1	181.6	453.4	1054.0

* Vapor properties given are for saturated vapor.
** These data are based upon samples tested in the laboratory and are not guaranteed for all samples. Write us for complete sales specifications for Therminol VP-1 fluid.
*** The enthalpy basis is liquid at the crystallizing point, 53.6 °F (12 °C).
† Does not constitute an express warranty. See NOTICE on the last page of this bulletin.

Vapor Thermal Conductivity			Vapor Viscosity			Temperature	
Btu/ ft-hr-°F	kcal/ m-hr-°C	W/m·K	lb/ft-hr	cSt [mm²/s]	cP [mPa·s]	°F	°C
0.0047	0.0069	0.0081	0.0138		0.0057	54	12
0.0048	0.0071	0.0082	0.0140		0.0058	60	16
0.0051	0.0076	0.0088	0.0145		0.0060	80	27
0.0054	0.0081	0.0094	0.0150		0.0062	100	38
0.0057	0.0086	0.0099	0.0156		0.0064	120	49
0.0061	0.0090	0.0105	0.0161	2720	0.0067	140	60
0.0064	0.0095	0.0111	0.0167	1360	0.0069	160	71
0.0068	0.0100	0.0117	0.0172	723	0.0071	180	82
0.0071	0.0106	0.0123	0.0178	405	0.0074	200	93
0.0074	0.0111	0.0129	0.0183	238	0.0076	220	104
0.0078	0.0116	0.0135	0.0189	146	0.0078	240	116
0.0082	0.0121	0.0141	0.0194	92.8	0.0080	260	127
0.0085	0.0127	0.0147	0.0200	61.0	0.0083	280	138
0.0089	0.0132	0.0154	0.0206	41.3	0.0085	300	149
0.0092	0.0138	0.0160	0.0211	28.8	0.0087	320	160
0.0096	0.0143	0.0166	0.0217	20.5	0.0090	340	171
0.0100	0.0149	0.0173	0.0222	15.0	0.0092	360	182
0.0104	0.0154	0.0179	0.0228	11.1	0.0094	380	193
0.0107	0.0160	0.0186	0.0234	8.41	0.0097	400	204
0.0111	0.0166	0.0192	0.0239	6.47	0.0099	420	216
0.0115	0.0171	0.0199	0.0245	5.05	0.0101	440	227
0.0119	0.0177	0.0206	0.0250	3.99	0.0103	460	238
0.0123	0.0183	0.0213	0.0256	3.20	0.0106	480	249
0.0126	0.0187	0.0218	0.0260	2.73	0.0107	495	257
0.0127	0.0189	0.0220	0.0261	2.59	0.0108	500	260
0.0131	0.0195	0.0226	0.0267	2.12	0.0110	520	271
0.0135	0.0201	0.0233	0.0272	1.75	0.0113	540	282
0.0139	0.0207	0.0240	0.0278	1.46	0.0115	560	293
0.0143	0.0213	0.0248	0.0284	1.22	0.0117	580	304
0.0147	0.0219	0.0255	0.0289	1.04	0.0120	600	316
0.0152	0.0225	0.0262	0.0294	0.882	0.0122	620	327
0.0156	0.0232	0.0269	0.0300	0.754	0.0124	640	338
0.0160	0.0238	0.0277	0.0306	0.649	0.0126	660	349
0.0164	0.0244	0.0284	0.0311	0.560	0.0128	680	360
0.0169	0.0251	0.0292	0.0316	0.486	0.0131	700	371
0.0173	0.0257	0.0299	0.0322	0.423	0.0133	720	382
0.0177	0.0264	0.0307	0.0327	0.369	0.0135	740	393
0.0180	0.0267	0.0310	0.0330	0.345	0.0136	750	399
0.0182	0.0270	0.0314	0.0332	0.323	0.0137	760	404
0.0186	0.0277	0.0322	0.0338	0.283	0.0140	780	416
0.0191	0.0284	0.0330	0.0343	0.248	0.0142	800	427

PHYSICAL AND CHEMICAL CHARACTERISTICS

Therminol® VP-1 is a eutectic mixture of 73.5% diphenyl oxide and 26.5% biphenyl. It is usable as a liquid or as a boiling-condensing heat transfer medium up to 750°F (400°C). It is miscible and interchangeable (for top-up or design purposes) with other similarly constituted diphenyl-oxide/biphenyl fluids.

Fluid Parameters Which Influence Design

The physical characteristics of Therminol VP-1 heat transfer fluid should be considered in the general arrangement of any heat transfer system in which it is to be used.

Therminol VP-1 has a low viscosity between its melting point (54°F, 12°C) and the temperature at which it vaporizes. In geographic areas where the system may be exposed to temperatures below this level, all piping that may contain the fluid in its liquid state should be heat traced.

Therminol VP-1 is exceptionally heat stable. However, care must be taken to avoid overheating, which could lead to deposition of solids on the heating surfaces of the vaporizer. Circulation rates in the heater should be selected to limit skin temperatures to reasonable values, with due consideration to the cost of replacing damaged fluid and the cost of maintaining an adequate heat flux. This is normally accomplished by the vaporizer or heater manufacturer in the course of recommending a particular unit and stipulating its operating parameters.

Under normal operating conditions, a vapor phase fluid will accumulate low-boiling contaminants such as air, water and degradation products. These noncondensables must be vented from the system to avoid aberrations in temperature control. Each user, or group of users if arranged in series, that operates after the same control valve should have at least one vapor accumulator (VA) installed for detecting and venting noncondensables. This is especially true if close temperature control is needed.

The physical and thermodynamic properties of Therminol VP-1 can be found on pages 2-5.

FIRE SAFETY CONSIDERATIONS

Leaks from pipes, valves or joints that saturate insulation are potentially hazardous because of the wicking effect and large surface exposure. Under such conditions, along with high temperatures, many organic liquids can spontaneously ignite. Leaks should be promptly repaired and the contaminated insulation replaced.

Leaks from a direct-fired vaporizer into the fire chamber normally result in burning of the vapor. Obviously, this should be avoided.

When vapor leaks from a pressurized system to the atmosphere, it is condensed by the relatively cold air which it contacts. This causes formation of a fog of tiny liquid droplets. Fogs of combustible liquids, of sufficiently high concentration in air, will burn if ignited. The fogs are flammable even though the overall temperature of the fog-air mixture may be below the flash point of the liquid and even though the vapor saturation concentration is below the flammable level.

The combustion of a fog-air mixture can result in an explosion, much like the combustion of a flammable vapor-air mixture. Such a fog-air mixture, however, does not normally ignite spontaneously. An ignition source is necessary, together with a sufficient concentration of the combustible fog.

Good safety practice in design, maintenance and operation can circumvent the potential dangers associated with pressurized organic vapor systems. In addition, further safeguards can be provided through the installation of special safety systems.

For further information on such safety devices for vapor phase systems, refer to the Solutia Central Engineering Study on this topic, available in reprint from from the American Institute of Chemical Engineers* (CEP Technical Manual, Volume 10, "Loss Prevention").

*1. G. C. Vincent and W. B. Howard, Hydrocarbon Mist Explosions, Part I – Prevention by Explosion Suppression.

*2. G. C. Vincent and R. C. Nelson, W. B. Howard and W. W. Russell, Hydrocarbon Mist Explosions, Part II – Prevention by Water Fog.

START-UP AND SHUT-DOWN PROCEDURES

Vapor System Start-up

There are several ways to start up vapor phase heating systems, but they generally contain these basic steps:

1. Open the vacuum system connection to the vapor system and wait until a steady-state vacuum is reached.
2. Close all valves to isolate the vapor system from the vacuum system.
3. Wait approximately 15 minutes and note any significant increase in pressure in the system. (This step is necessary to ensure that the system is fully closed.)
4. Introduce Therminol VP-1 to the vaporizer (or reboiler) and gradually heat to operating temperature. Periodically open the vacuum connections on the vent accumulators to evacuate the noncondensables. Continue venting until the temperature indicators show that hot vapor has reached the vent accumulators.

System Shut-down, Vacuum Draining

When the system is to be drained to a vacuum vessel, the shut-down procedure is as follows:

1. Cut off the heat source from the system.
2. Open the drain line to the vacuum vessel. (The liquid in the system will continue to flash into the drain until the vapor pressure of the liquid reaches the vacuum being pulled.)
3. When the liquid level stops dropping, introduce nitrogen to break the vacuum. The remaining liquid will drain relatively quickly.

System Shut-down, Pressure Draining

For draining into a pressure vessel, the procedure is only slightly different:

1. Make sure the available nitrogen pressure is less than the relief pressure of the vapor system.
2. Cut off the heat source.
3. Introduce nitrogen to the system.
4. Open the drain line to the pressure vessel.
5. Close the drain line after the system is drained.
6. Open all high-point vacuum connections to purge and help cool the system.

TOXICITY AND HANDLING

Toxicity

The rat acute oral LD50 of Therminol VP-1 heat transfer fluid is 2.05 grams/kilogram, administered as the undiluted material. When held in continuous 24-hour contact with rabbit skin, the dermal LD50 was estimated to be greater than 5.01 grams/kilogram. Thus, Therminol VP-1 is considered to be slightly toxic by ingestion in single doses and practically non-toxic by single dermal applications.

When 0.1 milliliter of undiluted Therminol VP-1 was placed into the conjunctival sac of the rabbit's eye, a slight degree of irritation resulted. The average score of the 24-, 48- and 72-hour readings was 3.8 on a scale of 110.0. All eyes had regained a normal appearance 72 hours after they were dosed.

A mild degree of irritation resulted when 0.5 milliliter of Therminol VP-1 was held in continuous 24-hour contact with intact and abraded rabbit skin. The Primary Irritation Index was 2.9 on a scale of 8.0.

Rats were exposed to a stream of air which was passed through Therminol VP-1 and led directly into the experimental chamber. Due to its low volatility, there was essentially no vaporization of test material, and the animals survived both the six-hour exposure and the subsequent 14-day observation period without observable effects.

THERMINOL® VP-1

Heat Transfer Fluid by **Solutia**

SAFETY AND HANDLING: Material Safety Data Sheets may be obtained from Environmental Operations, Industrial Products Group, Solutia Inc. Heat transfer fluids are intended only for indirect heating purposes. Under no circumstances should this product contact or in any way contaminate food, animal feed, food products, food packaging materials, food chemicals, pharmaceuticals or any items which may directly or indirectly be ultimately ingested by humans. Any contact may contaminate these items to the extent that their destruction may be required. Precautions against ignitions and fires should be taken with this product.

NOTICE: Although the information and recommendations set forth herein (hereinafter "Information") are presented in good faith and believed to be correct as of the date hereof, Solutia Inc. makes no representations or warranties as to the completeness or accuracy thereof. Information is supplied upon the condition that the persons receiving same will make their own determination as to its suitability for their purposes prior to use. In no event will Solutia Inc. be responsible for damages of any nature whatsoever resulting from the use of or reliance upon Information or the product to which Information refers. Nothing contained herein is to be construed as a recommendation to use any product, process, equipment or formulation in conflict with any patent, and Solutia Inc. makes no representation or warranty, express or implied, that the use thereof will not infringe any patent. NO REPRESENTATIONS OR WARRANTIES, EITHER EXPRESS OR IMPLIED, OF MERCHANTABILITY, FITNESS FOR A PARTICULAR PURPOSE OR OF ANY OTHER NATURE ARE MADE HEREUNDER WITH RESPECT TO INFORMATION OR THE PRODUCT TO WHICH INFORMATION REFERS.

® Registered Trademark of Solutia Inc.
© Solutia Inc., 1999. All rights reserved.

WORLDWIDE SALES OFFICES

UNITED STATES

For order assistance
Please call our Customer Service Department, toll free at (800) 426-2463.

For technical assistance
Please call our Technical Service Hotline, toll free at (800) 433-6997.

Houston
1800 West Loop South
Suite 1360
Houston, Texas 77027
Tel: (713) 850-0088
Fax: (713) 850-0096

St. Louis
P.O. Box 66760
St. Louis, Missouri 63166-6760
Tel: (314) 674-1000
Fax: (314) 674-6331

INTERNATIONAL SALES OFFICES

Argentina
Solutia Argentina S.R.L.
Alicia Moreau de Justo 1050,
3rd Floor
1107 Puerto Madero
Buenos Aries, Argentina
Tel: 54-1-331-4077
Fax: 54-1-331-7481

Australia
Solutia Australia Pty. Ltd.
Level 1, 437 Canterbury Road
Surrey Hills, Victoria 3127
Australia
Tel: 61-3-9888-4589
Fax: 61-3-9888-4562

Belgium
Solutia Europe N.V./S.A.
Rue Laid Burniat, 3
Parc Scientifique - Fleming
B-1348 Louvain-la-Neuve (Sud)
Belgium
Tel: 32.10.48.12.11
Fax: 32.10.48.12.12

Brazil
Solutia Brazil Ltda.
Rua Gomes de Carvalho
1306-60. Andar 04547-005
Sao Paulo, SP, Brazil
Tel: 55-11-5087-3000
Fax: 55-11-5087-3030

Canada
Solutia Canada Inc.
2233 Argentia Road
P.O. Box 787
Mississauga, Ontario
L5M 2G4 Canada
Tel: 905-826-9222
Fax: 905-826-3119

China-PRC
Solutia Chemical Co. Ltd., Suzhou
9th Floor, Kings Tower
16 Shi Shan Road
Suzhou New District, PRC 215011
Tel: 86-512-825-3191
Fax: 86-512-825-0417

Colombia
Solutia Colombia Ltda.
Carrera 7 No. 71-21
Torre B, ofc.: 906
Santa Fe de Bogota, DC
Colombia
Tel: 571-317-48-20
Fax: 571-317-48-20

India
Solutia Chemicals India Private Limited
205-207, 'Midas'
Sahar Plaza Complex
Andheri-Kurla Road
Andheri (E)
Mumbai 400 059 India
Tel : 91 22 8302862/64
Fax: 91 22 8310059

Japan
Solutia Japan Ltd.
Shinkawa Sanko Building
Second Floor
1-13-17, Shinkawa, Chuo-ku
Tokyo 104-0033, Japan
Tel: (03) 3523 2080
Fax: (03) 3523 2070

Korea
Solutia Korea Ltd.
3rd Floor, Anglican Church Building
3-7, Jeong-dong, Joong-gu,
Seoul 100-120, Korea
Tel: 82-2-736-7112
Fax: 82-2-739-5049

Malaysia
Solutia Hong Kong Ltd.
Malaysia Branch
12th Floor (1309-B)
Kelana Parkview Tower
No. 1 Jalan SS 6/2
Kelana Jaya
47301 Petaling Jaya
Selangor, Malaysia
Tel: 60-3-704-0279
Fax: 60-3-704-4067

Mexico
Solutia Mexico, S. de R.L. de C.V.
Edificio Torre Esmeralda
Blvd. Manuel Avila Camacho
No. 40, Piso 12
Colonia Lomas de Chapultepec
11000 Mexico, D.F.
Tel: 525-202-5600
Fax: 525-202-0979

Singapore
Solutia Singapore Pte. Ltd.
101 Thomson Road
#19-01/02 United Square
Singapore 307591
Tel: 65-355-7239
Fax: 65-254-3138

Taiwan
Solutia Taiwan Inc.
2F, 124 Chung Cheng Road
Shin Lin District, Taipei
Taiwan, R.O.C.
Tel: 886-2-2835-1666
Fax: 886-2-8866-2703

Thailand
Solutia Thailand Ltd.
19th Floor, SCB Park Plaza
19 Ratchadapisek Road
Laadyao, Chatuchak
Bangkok, Thailand 10900
Tel: 66-2-937-8860
Fax: 66-2-937-8865

Venezuela
Solutia Venezuela SRL
Avenida Francisco de Miranda
Edificio Parque Cristal
Torre Oeste, Piso 13 Ofc 13-4
Los Palos Grandes
Caracas 1062, Venezuela
Tel: 582-285-50-37
Fax: 582-285-71-13

Visit our new website at
www.thermfol.com.

SOLUTIA™
Applied Chemistry, Creative Solutions™

Solutia
P.O. Box 66760
St. Louis, MO 63166-6760
Tel: (314) 674-1000

Litho in U.S.A.
® Registered Trademark of Solutia Inc.
© Solutia Inc., 1999. All rights reserved.
Printed on recycled paper

Material Safety Data Sheet
The Dow Chemical Company

Product Name: DOWTHERM* A HEAT TRANSFER FLUID

Issue Date: 08/03/2007
Print Date: 06 Aug 2007

The Dow Chemical Company encourages and expects you to read and understand the entire (M)SDS, as there is important information throughout the document. We expect you to follow the precautions identified in this document unless your use conditions would necessitate other appropriate methods or actions.

1. Product and Company Identification

Product Name
DOWTHERM* A HEAT TRANSFER FLUID

COMPANY IDENTIFICATION
The Dow Chemical Company
2030 Willard H. Dow Center
Midland, MI 48674
USA

Customer Information Number: 800-258-2436

EMERGENCY TELEPHONE NUMBER
24-Hour Emergency Contact: 989-636-4400
Local Emergency Contact: 989-636-4400

2. Hazards Identification

Emergency Overview
Color: Colorless to yellow
Physical State: Liquid
Odor: Aromatic
Hazards of product:

CAUTION! May cause skin irritation. May cause respiratory tract irritation. Keep upwind of spill. Highly toxic to fish and/or other aquatic organisms.

OSHA Hazard Communication Standard
This product is a "Hazardous Chemical" as defined by the OSHA Hazard Communication Standard, 29 CFR 1910.1200.

Potential Health Effects
Eye Contact: May cause pain disproportionate to the level of irritation to eye tissues. May cause slight temporary eye irritation. Vapor may cause eye irritation experienced as mild discomfort and redness.
Skin Contact: Repeated contact may cause skin burns. Symptoms may include pain, severe local redness, swelling, and tissue damage. Prolonged or repeated contact may cause skin irritation.

* Indicates a Trademark

Skin Absorption: Prolonged skin contact is unlikely to result in absorption of harmful amounts.
Inhalation: Excessive exposure may cause irritation to upper respiratory tract (nose and throat) and lungs. May cause headache and nausea due to odor.
Ingestion: Low toxicity if swallowed. Small amounts swallowed incidentally as a result of normal handling operations are not likely to cause injury; however, swallowing larger amounts may cause injury. In animals, effects have been reported on the following organs: Kidney. Liver.
Effects of Repeated Exposure: The data presented are for the following material: Diphenyl oxide (vapour): Observations in animals include: Respiratory effects. The data presented are for the following material: (biphenyl) In humans, effects have been reported on the following organs: Central nervous system. Liver. Peripheral nervous system. In animals, effects have been reported on the following organs: Gastrointestinal tract. Kidney. May cause nausea and vomiting. May cause abdominal discomfort or diarrhea.
Cancer Information: Contains component(s) which have caused cancer in laboratory animals. However, the component(s) is/are not genotoxic, and the relevance of cancer to humans is unknown.
Birth Defects/Developmental Effects: Contains component(s) which, in laboratory animals, have been toxic to the fetus only at doses toxic to the mother.
Reproductive Effects: In animal studies on component(s), effects on reproduction were seen only at doses that produced significant toxicity to the parent animals.

3. Composition Information

Component	CAS #	Amount
Diphenyl oxide	101-84-8	73.0 %
Biphenyl	92-52-4	27.0 %

4. First-aid measures

Eye Contact: Flush eyes thoroughly with water for several minutes. Remove contact lenses after the initial 1-2 minutes and continue flushing for several additional minutes. If effects occur, consult a physician, preferably an ophthalmologist.
Skin Contact: Wash skin with plenty of water.
Inhalation: Move person to fresh air; if effects occur, consult a physician.
Ingestion: If swallowed, seek medical attention. Do not induce vomiting unless directed to do so by medical personnel.
Notes to Physician: If burn is present, treat as any thermal burn, after decontamination. No specific antidote. Treatment of exposure should be directed at the control of symptoms and the clinical condition of the patient.

5. Fire Fighting Measures

Extinguishing Media: Water fog or fine spray. Dry chemical fire extinguishers. Carbon dioxide fire extinguishers. Foam. Do not use direct water stream. May spread fire. General purpose synthetic foams (including AFFF type) or protein foams are preferred if available. Alcohol resistant foams (ATC type) may function. Water fog, applied gently may be used as a blanket for fire extinguishment.
Fire Fighting Procedures: Keep people away. Isolate fire and deny unnecessary entry. Do not use direct water stream. May spread fire. Burning liquids may be moved by flushing with water to protect personnel and minimize property damage. Water fog, applied gently may be used as a blanket for fire extinguishment. Contain fire water run-off if possible. Fire water run-off, if not contained, may cause environmental damage. Review the "Accidental Release Measures" and the "Ecological Information" sections of this (M)SDS.
Special Protective Equipment for Firefighters: Wear positive-pressure self-contained breathing apparatus (SCBA) and protective fire fighting clothing (includes fire fighting helmet, coat, trousers, boots, and gloves). Avoid contact with this material during fire fighting operations. If contact is likely, change to full chemical resistant fire fighting clothing with self-contained breathing apparatus. If this is

not available, wear full chemical resistant clothing with self-contained breathing apparatus and fight fire from a remote location. For protective equipment in post-fire or non-fire clean-up situations, refer to the relevant sections.
Unusual Fire and Explosion Hazards: Violent steam generation or eruption may occur upon application of direct water stream to hot liquids. Liquid mist of this product can burn. Flammable concentrations of vapor can accumulate at temperatures above flash point; see Section 9. Dense smoke is produced when product burns.
Hazardous Combustion Products: During a fire, smoke may contain the original material in addition to combustion products of varying composition which may be toxic and/or irritating. Combustion products may include and are not limited to: Carbon monoxide. Carbon dioxide.

6. Accidental Release Measures

Steps to be Taken if Material is Released or Spilled: Contain spilled material if possible. Collect in suitable and properly labeled containers. See Section 13, Disposal Considerations, for additional information.
Personal Precautions: Keep upwind of spill. Ventilate area of leak or spill. Keep unnecessary and unprotected personnel from entering the area. Use appropriate safety equipment. For additional information, refer to Section 8, Exposure Controls and Personal Protection. Refer to Section 7, Handling, for additional precautionary measures.
Environmental Precautions: Prevent from entering into soil, ditches, sewers, waterways and/or groundwater. See Section 12, Ecological Information. Spills or discharge to natural waterways is likely to kill aquatic organisms.

7. Handling and Storage

Handling
General Handling: Avoid contact with skin and clothing. Avoid breathing vapor. Wash thoroughly after handling. Use with adequate ventilation. Keep container closed. Spills of these organic materials on hot fibrous insulations may lead to lowering of the autoignition temperatures possibly resulting in spontaneous combustion. See Section 8, EXPOSURE CONTROLS AND PERSONAL PROTECTION.

Storage
Store away from incompatible materials. See STABILITY AND REACTIVITY section.

8. Exposure Controls / Personal Protection

Exposure Limits

Component	List	Type	Value
Diphenyl oxide	ACGIH	TWA Vapor.	1 ppm
	ACGIH	STEL Vapor.	2 ppm
	OSHA Table Z-1	PEL Vapor.	7 mg/m3 1 ppm
Biphenyl	ACGIH	TWA	0.2 ppm
	OSHA Table Z-1	PEL	1 mg/m3 0.2 ppm

Personal Protection
Eye/Face Protection: Use safety glasses. If exposure causes eye discomfort, use a full-face respirator.

Skin Protection: When prolonged or frequently repeated contact could occur, use protective clothing chemically resistant to this material. Selection of specific items such as faceshield, boots, apron, or full-body suit will depend on the task.

Hand protection: Use gloves chemically resistant to this material when prolonged or frequently repeated contact could occur. Examples of preferred glove barrier materials include: Viton. Polyethylene. Polyvinyl chloride ("PVC" or "vinyl"). Styrene/butadiene rubber. Polyvinyl alcohol ("PVA"). Ethyl vinyl alcohol laminate ("EVAL"). Examples of acceptable glove barrier materials include: Butyl rubber. Neoprene. Chlorinated polyethylene. Natural rubber ("latex"). Nitrile/butadiene rubber ("nitrile" or "NBR"). NOTICE: The selection of a specific glove for a particular application and duration of use in a workplace should also take into account all relevant workplace factors such as, but not limited to: Other chemicals which may be handled, physical requirements (cut/puncture protection, dexterity, thermal protection), potential body reactions to glove materials, as well as the instructions/specifications provided by the glove supplier.

Respiratory Protection: Atmospheric levels should be maintained below the exposure guideline. When respiratory protection is required for certain operations, use an approved air-purifying respirator. The following should be effective types of air-purifying respirators: Organic vapor cartridge with a particulate pre-filter.

Ingestion: Use good personal hygiene. Do not consume or store food in the work area. Wash hands before smoking or eating.

Engineering Controls

Ventilation: Provide general and/or local exhaust ventilation to control airborne levels below the exposure guidelines.

9. Physical and Chemical Properties

Physical State	Liquid
Color	Colorless to yellow
Odor	Aromatic
Flash Point - Closed Cup	113 °C (235 °F) *Closed Cup*
Flammable Limits In Air	**Lower**: 0.8 %(V) *Literature* **Upper**: 7.0 %(V) *Literature*
Autoignition Temperature	599 °C (1,110 °F) *Literature*
Vapor Pressure	0.025 mmHg @ 25 °C *Literature*
Boiling Point (760 mmHg)	257 °C (495 °F) *Literature* .
Vapor Density (air = 1)	>1.0 *Literature*
Specific Gravity (H2O = 1)	1.050 - 1.075 25 °C/25 °C *Literature*
Freezing Point	12.0 °C (53.6 °F) *Literature*
Melting Point	12.0 °C (53.6 °F) *Literature*
Solubility in Water (by weight)	13.8 ppm @ 60 °F *Literature*
pH	Not applicable
Kinematic Viscosity	3.51 mm2/s @ 25 °C *Literature*

10. Stability and Reactivity

Stability/Instability

Thermally stable at typical use temperatures.

Conditions to Avoid: Exposure to elevated temperatures can cause product to decompose.

Incompatible Materials: Avoid contact with oxidizing materials.

Hazardous Polymerization

Will not occur.

Thermal Decomposition
Decomposition products depend upon temperature, air supply and the presence of other materials. Decomposition products can include trace amounts of: Benzene. Phenol.

11. Toxicological Information

Acute Toxicity
Ingestion
LD50, Rat > 2,000 mg/kg
Skin Absorption
The dermal LD50 has not been determined.
Repeated Dose Toxicity
The data presented are for the following material: Diphenyl oxide (vapour): Observations in animals include: Respiratory effects. The data presented are for the following material: (biphenyl) In humans, effects have been reported on the following organs: Central nervous system. Liver. Peripheral nervous system. In animals, effects have been reported on the following organs: Gastrointestinal tract. Kidney. May cause nausea and vomiting. May cause abdominal discomfort or diarrhea.
Chronic Toxicity and Carcinogenicity
Contains component(s) which have caused cancer in laboratory animals. However, the component(s) is/are not genotoxic, and the relevance of cancer to humans is unknown.
Developmental Toxicity
Contains component(s) which, in laboratory animals, have been toxic to the fetus only at doses toxic to the mother. Contains component(s) which did not cause birth defects in laboratory animals.
Reproductive Toxicity
In animal studies on component(s), effects on reproduction were seen only at doses that produced significant toxicity to the parent animals.
Genetic Toxicology
In vitro genetic toxicity studies were negative. Animal genetic toxicity studies were negative.

12. Ecological Information

CHEMICAL FATE
Data for Component: Diphenyl oxide

Movement & Partitioning
Bioconcentration potential is moderate (BCF between 100 and 3000 or Log Pow between 3 and 5). Potential for mobility in soil is low (Koc between 500 and 2000).
Henry's Law Constant (H): 2.2E-04 atm*m3/mole; 25 °C Estimated
Partition coefficient, n-octanol/water (log Pow): 4.21 Measured
Partition coefficient, soil organic carbon/water (Koc): 820 - 1,950 Estimated
Bioconcentration Factor (BCF): 196 - 470; fish; Measured

Persistence and Degradability
Biodegradation under aerobic static laboratory conditions is high (BOD20 or BOD28/ThOD > 40%). Material is expected to biodegrade only very slowly (in the environment). Fails to pass OECD/EEC tests for ready biodegradability.
Indirect Photodegradation with OH Radicals

Rate Constant	Atmospheric Half-life	Method
9.84E-12 cm3/s	1.1 d	Estimated

OECD Biodegradation Tests:

Biodegradation	Exposure Time	Method
6.3 %	28 d	OECD 301C Test

Biological oxygen demand (BOD):

BOD 5	BOD 10	BOD 20	BOD 28
72 - 76 %	80 - 91 %	82 - 99 %	

Chemical Oxygen Demand: 2.19 mg/mg

Theoretical Oxygen Demand: 2.63 mg/mg

Data for Component: **Biphenyl**

Movement & Partitioning

Bioconcentration potential is moderate (BCF between 100 and 3000 or Log Pow between 3 and 5). Potential for mobility in soil is low (Koc between 500 and 2000).
Henry's Law Constant (H): 4.08E-4 atm*m3/mole; 25 °C Measured
Partition coefficient, n-octanol/water (log Pow): 3.98 Measured
Partition coefficient, soil organic carbon/water (Koc): 500 - 630 Estimated
Bioconcentration Factor (BCF): 340 - 1,900; fish; Measured

Persistence and Degradability

Material is readily biodegradable. Passes OECD test(s) for ready biodegradability.
Indirect Photodegradation with OH Radicals

Rate Constant	Atmospheric Half-life	Method
6.77E-12 cm3/s	1.6 d	Estimated

OECD Biodegradation Tests:

Biodegradation	Exposure Time	Method
100 %	28 d	OECD 301D Test

Theoretical Oxygen Demand: 3.01 mg/mg

ECOTOXICITY

Fish Acute & Prolonged Toxicity
LC50, fathead minnow (Pimephales promelas), 96 h: 9.6 mg/l
Aquatic Invertebrate Acute Toxicity
LC50, water flea Daphnia magna, static, 48 h: 0.29 mg/l

13. Disposal Considerations

DO NOT DUMP INTO ANY SEWERS, ON THE GROUND, OR INTO ANY BODY OF WATER. All disposal practices must be in compliance with all Federal, State/Provincial and local laws and regulations. Regulations may vary in different locations. Waste characterizations and compliance with applicable laws are the responsibility solely of the waste generator. DOW HAS NO CONTROL OVER THE MANAGEMENT PRACTICES OR MANUFACTURING PROCESSES OF PARTIES HANDLING OR USING THIS MATERIAL. THE INFORMATION PRESENTED HERE PERTAINS ONLY TO THE PRODUCT AS SHIPPED IN ITS INTENDED CONDITION AS DESCRIBED IN MSDS SECTION: Composition Information. FOR UNUSED & UNCONTAMINATED PRODUCT, the preferred options include sending to a licensed, permitted: Incinerator or other thermal destruction device. As a service to its customers, Dow can provide names of information resources to help identify waste management companies and other facilities which recycle, reprocess or manage chemicals or plastics, and that manage used drums. Telephone Dow's Customer Information Group at 1-800-258-2436 or 1-989-832-1556 (U.S.), or 1-800-331-6451 (Canada) for further details.

14. Transport Information

DOT Non-Bulk
Proper Shipping Name: ENVIRONMENTALLY HAZARDOUS SUBSTANCES, LIQUID, NOS
Technical Name: BIPHENYL
Hazard Class: 9 **ID Number:** UN3082 **Packing Group:** PG III

DOT Bulk
Proper Shipping Name: ENVIRONMENTALLY HAZARDOUS SUBSTANCES, LIQUID, NOS
Technical Name: BIPHENYL
Hazard Class: 9 **ID Number:** UN3082 **Packing Group:** PG III

IMDG
Proper Shipping Name: ENVIRONMENTALLY HAZARDOUS SUBSTANCES, LIQUID, NOS
Technical Name: BIPHENYL
Hazard Class: 9 **ID Number:** UN3082 **Packing Group:** PG III
EMS Number: F-A,S-F
Marine pollutant.: No

ICAO/IATA
Proper Shipping Name: ENVIRONMENTALLY HAZARDOUS SUBSTANCES, LIQUID, NOS
Technical Name: BIPHENYL
Hazard Class: 9 **ID Number:** UN3082 **Packing Group:** PG III
Cargo Packing Instruction: 914
Passenger Packing Instruction: 914

Additional Information

Reportable quantity: 370 lb – BIPHENYL

This information is not intended to convey all specific regulatory or operational requirements/information relating to this product. Additional transportation system information can be obtained through an authorized sales or customer service representative. It is the responsibility of the transporting organization to follow all applicable laws, regulations and rules relating to the transportation of the material.

15. Regulatory Information

OSHA Hazard Communication Standard
This product is a "Hazardous Chemical" as defined by the OSHA Hazard Communication Standard, 29 CFR 1910.1200.

Superfund Amendments and Reauthorization Act of 1986 Title III (Emergency Planning and Community Right-to-Know Act of 1986) Sections 311 and 312

Immediate (Acute) Health Hazard	Yes
Delayed (Chronic) Health Hazard	Yes
Fire Hazard	No
Reactive Hazard	No
Sudden Release of Pressure Hazard	No

Superfund Amendments and Reauthorization Act of 1986 Title III (Emergency Planning and Community Right-to-Know Act of 1986) Section 313
This product contains the following substances which are subject to the reporting requirements of Section 313 of Title III of the Superfund Amendments and Reauthorization Act of 1986 and which are listed in 40 CFR 372.

Component	CAS #	Amount
Biphenyl	92-52-4	27.0%

Pennsylvania (Worker and Community Right-To-Know Act): Pennsylvania Hazardous Substances List and/or Pennsylvania Environmental Hazardous Substance List:
The following product components are cited in the Pennsylvania Hazardous Substance List and/or the Pennsylvania Environmental Substance List, and are present at levels which require reporting.

Component	CAS #	Amount
Diphenyl oxide	101-84-8	73.0%
Biphenyl	92-52-4	27.0%

Pennsylvania (Worker and Community Right-To-Know Act): Pennsylvania Special Hazardous Substances List:
To the best of our knowledge, this product does not contain chemicals at levels which require reporting under this statute.

California Proposition 65 (Safe Drinking Water and Toxic Enforcement Act of 1986)
This product contains no listed substances known to the State of California to cause cancer, birth defects or other reproductive harm, at levels which would require a warning under the statute.

US. Toxic Substances Control Act
All components of this product are on the TSCA Inventory or are exempt from TSCA Inventory requirements under 40 CFR 720.30
CEPA - Domestic Substances List (DSL)
All substances contained in this product are listed on the Canadian Domestic Substances List (DSL) or are not required to be listed.

16. Other Information

Hazard Rating System

NFPA	Health	Fire	Reactivity
	1	1	0

Recommended Uses and Restrictions
A heat transfer agent - For industrial use. Dow recommends that you use this product in a manner consistent with the listed use. If your intended use is not consistent with Dow's stated use, please contact Dow's Customer Information Group.

Revision
Identification Number: 1007176 / 0000 / Issue Date 08/03/2007 / Version: 1.1
Most recent revision(s) are noted by the bold, double bars in left-hand margin throughout this document.

Legend

N/A	Not available
W/W	Weight/Weight
OEL	Occupational Exposure Limit
STEL	Short Term Exposure Limit
TWA	Time Weighted Average
ACGIH	American Conference of Governmental Industrial Hygienists, Inc.
DOW IHG	Dow Industrial Hygiene Guideline
WEEL	Workplace Environmental Exposure Level
HAZ_DES	Hazard Designation
Action Level	A value set by OSHA that is lower than the PEL which will trigger the need for activities such as exposure monitoring and medical surveillance if exceeded.

The Dow Chemical Company urges each customer or recipient of this (M)SDS to study it carefully and consult appropriate expertise, as necessary or appropriate, to become aware of and understand the data contained in this (M)SDS and any hazards associated with the product. The information herein is provided in good faith and believed to be accurate as of the effective date shown above. However, no warranty, express or implied, is given. Regulatory requirements are subject to change and may differ between various locations. It is the buyer's/user's responsibility to ensure that his activities comply with all federal, state, provincial or local laws. The information presented here pertains only to the product as shipped. Since conditions for use of the product are not under the control of the manufacturer, it is the buyer's/user's duty to determine the conditions necessary for the safe use of this product. Due to the proliferation of sources for information such as manufacturer-specific (M)SDSs, we are not and cannot be responsible for (M)SDSs obtained from any source other than ourselves. If you have obtained an (M)SDS from another source or if you are not sure that the (M)SDS you have is current, please contact us for the most current version.

ATTACHMENT C.1-8

VEHICLE USE AND GROWTH RATES (1980-2020)

POPULATION AND VEHICLE TRENDS REPORT

MOJAVE DESERT AIR BASIN
Vehicle Population
All Vehicles
By Number of Vehicles

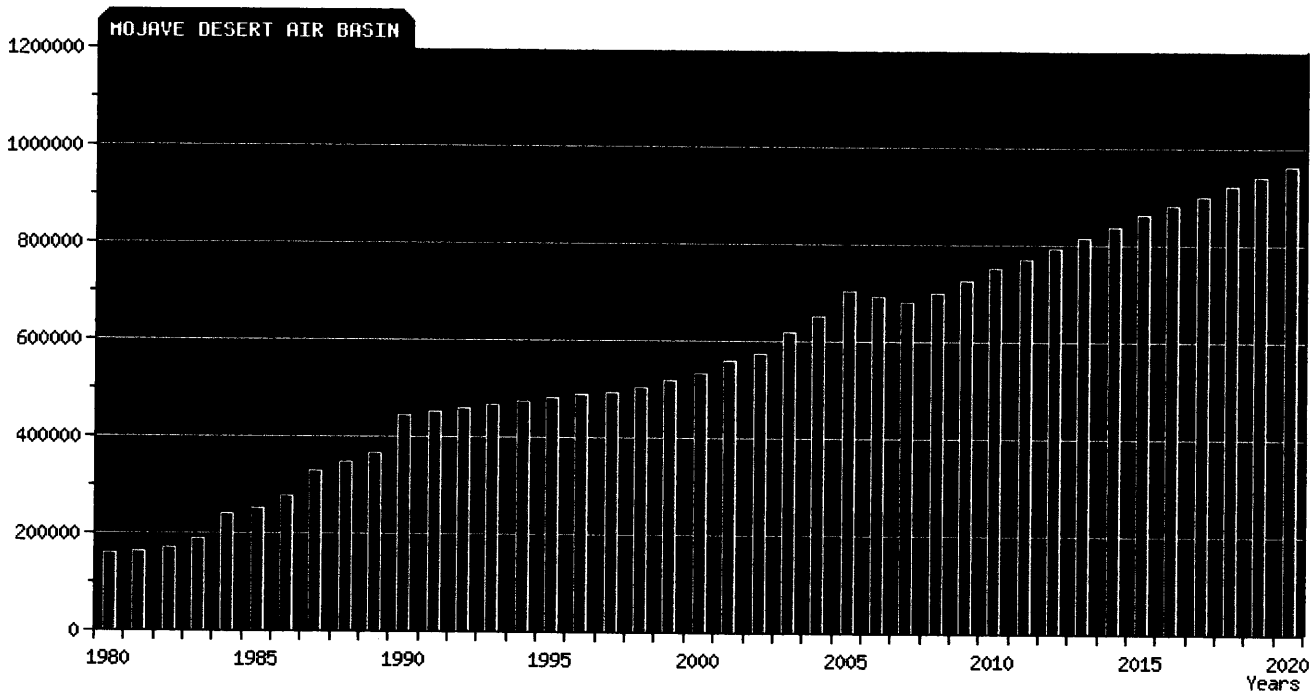

Passenger Cars | Light-Duty Trucks 1 (<3,750 lbs) | Light-Duty Trucks 2 (3,751-5,750 lbs)
Medium-Duty Trucks (5,751-8,500 lbs) | Light Heavy-Duty Trucks 1 (8,501-10,000 lbs)
Medium Heavy-Duty Trucks (14,001-33,000 lbs) | Light Heavy-Duty Trucks 2 (10,001-14,000 lbs)
Heavy Heavy-Duty Trucks (>33,000lbs) | Urban Buses | Motorcycles | Motor Homes | School Buses | Other Buses
[New-Query]

Year	Number of Vehicles	Year	Number of Vehicles
1980	160,823	2001	560,579
1981	164,766	2002	575,301
1982	171,723	2003	618,084
1983	190,544	2004	650,784
1984	239,494	2005	703,353
1985	253,690	2006	690,924
1986	277,582	2007	679,810
1987	329,144	2008	701,710
1988	347,746	2009	725,436
1989	366,429	2010	750,014
1990	443,767	2011	771,369
1991	453,079	2012	793,346
1992	459,169	2013	815,965
1993	467,238	2014	838,566
1994	474,636	2015	861,829
1995	481,293	2016	881,065
1996	490,361	2017	900,741
1997	492,418	2018	920,874
1998	502,792	2019	941,470
1999	518,445	2020	962,539
2000	532,579	.	.

[Download Data]

Source: EMFAC2007 ver2.3(Apr03-Default Activity) found here

POPULATION AND VEHICLE TRENDS REPORT

MOJAVE DESERT AIR BASIN
Daily Vehicle Miles Traveled
All Vehicles
By Thousands of Miles / Day

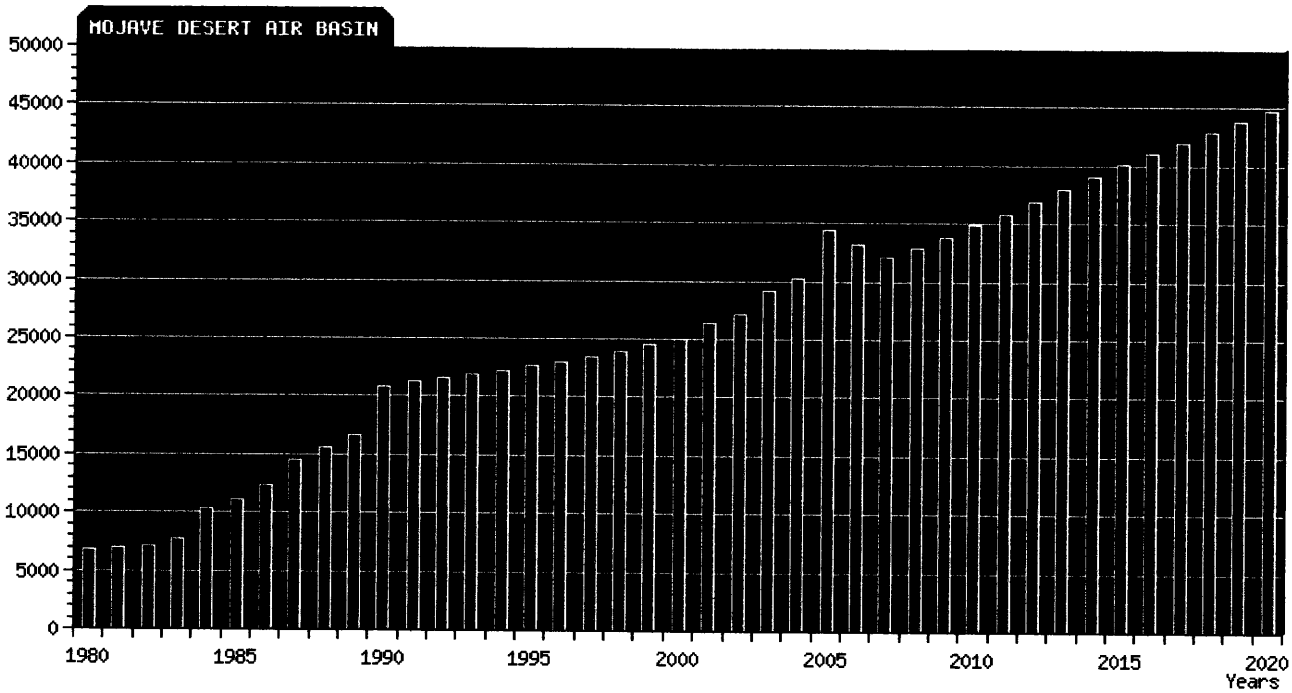

Passenger Cars | Light-Duty Trucks 1 (<3,750 lbs) | Light-Duty Trucks 2 (3,751-5,750 lbs)
Medium-Duty Trucks (5,751-8,500 lbs) | Light Heavy-Duty Trucks 1 (8,501-10,000 lbs)
Medium Heavy-Duty Trucks (14,001-33,000 lbs) | Light Heavy-Duty Trucks 2 (10,001-14,000 lbs)
Heavy Heavy-Duty Trucks (>33,000lbs) | Urban Buses | Motorcycles | Motor Homes | School Buses | Other Buses
[New-Query]

Year	Thousands of Miles / Day	Year	Thousands of Miles / Day
1980	6,745	2001	26,444
1981	6,895	2002	27,185
1982	7,070	2003	29,211
1983	7,766	2004	30,291
1984	10,341	2005	34,411
1985	11,130	2006	33,169
1986	12,323	2007	32,059
1987	14,480	2008	32,869
1988	15,516	2009	33,820
1989	16,740	2010	34,880
1990	20,896	2011	35,840
1991	21,369	2012	36,871
1992	21,670	2013	37,963
1993	21,858	2014	39,050
1994	22,192	2015	40,184
1995	22,712	2016	41,055
1996	23,028	2017	41,960
1997	23,498	2018	42,884
1998	23,888	2019	43,811
1999	24,575	2020	44,740
2000	24,999	.	.

[Download Data]

Source: EMFAC2007 ver2.3(Apr03-Default Activity) found here

POPULATION AND VEHICLE TRENDS REPORT

MOJAVE DESERT AIR BASIN
Daily Vehicle Fuel Consumption (Gasoline and Diesel)
All Vehicles
By Thousands of Gallons / Day

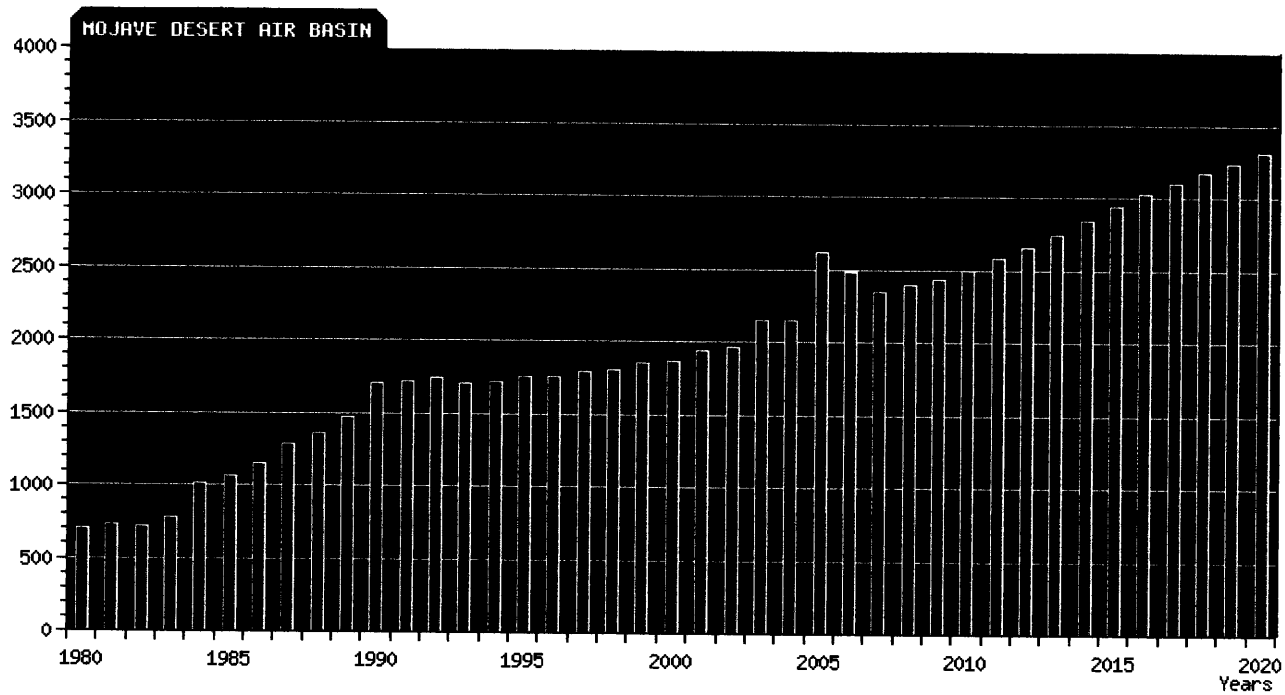

Gasoline | Diesel
Passenger Cars | Light-Duty Trucks 1 (<3,750 lbs) | Light-Duty Trucks 2 (3,751-5,750 lbs)
Medium-Duty Trucks (5,751-8,500 lbs) | Light Heavy-Duty Trucks 1 (8,501-10,000 lbs)
Medium Heavy-Duty Trucks (14,001-33,000 lbs) | Light Heavy-Duty Trucks 2 (10,001-14,000 lbs)
Heavy Heavy-Duty Trucks (>33,000lbs) | Urban Buses | Motorcycles | Motor Homes | School Buses | Other Buses
[New-Query]

Year	Thousands of Gallons / Day	Year	Thousands of Gallons / Day
1980	700	2001	1,937
1981	723	2002	1,958
1982	722	2003	2,142
1983	783	2004	2,153
1984	1,015	2005	2,623
1985	1,066	2006	2,485
1986	1,143	2007	2,351
1987	1,287	2008	2,392
1988	1,363	2009	2,434
1989	1,464	2010	2,499
1990	1,699	2011	2,583
1991	1,717	2012	2,660
1992	1,738	2013	2,745
1993	1,707	2014	2,841
1994	1,716	2015	2,933
1995	1,748	2016	3,022
1996	1,749	2017	3,095
1997	1,792	2018	3,167
1998	1,807	2019	3,238
1999	1,850	2020	3,306
2000	1,862	.	.

[Download Data]

Source: pending

POPULATION AND VEHICLE TRENDS REPORT

MOJAVE DESERT AIR BASIN
Human Population
By Number of People

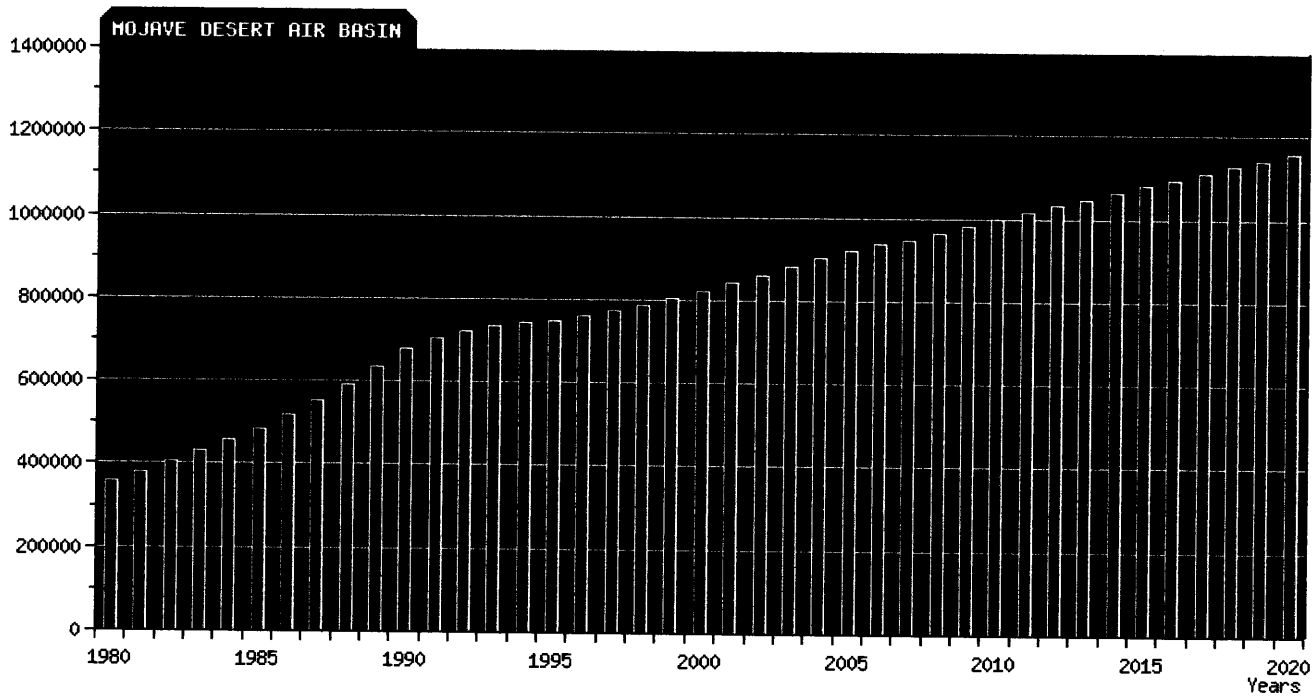

[New-Query]

Year	Number of People	Year	Number of People
1980	357,420	2001	841,889
1981	380,477	2002	860,189
1982	405,712	2003	880,956
1983	430,747	2004	901,393
1984	456,619	2005	919,846
1985	485,698	2006	936,128
1986	518,528	2007	948,260
1987	554,728	2008	965,228
1988	593,363	2009	982,198
1989	634,383	2010	999,166
1990	676,413	2011	1,015,079
1991	702,971	2012	1,030,989
1992	721,925	2013	1,046,901
1993	732,661	2014	1,062,813
1994	741,228	2015	1,078,726
1995	749,355	2016	1,094,635
1996	758,814	2017	1,110,548
1997	771,928	2018	1,126,459
1998	784,926	2019	1,142,370
1999	802,230	2020	1,158,282
2000	822,210	.	.

[Download Data]

Source: Developed using reports from the California Department of Finance. See references

A Department of the California Environmental Protection Agency

APPENDIX C.2

Modeling Support Data

Tables presented in this Appendix are as follows:

C.2-1	Daggett Wind Rose Frequency (Count) Distribution
C.2-2	Daggett Wind Rose Frequency (Normalized) Distribution
C.2-3	Barstow Regional Climate Summary
C.2-4	Mohave Desert Air Basin Historical Air Quality Data
C.2-5	Building Dimensions and Height Data
C.2-6	Operational Impacts Summary

In addition, this appendix contains the following Figures:

C.2-1a,b,c	Proposed Facility Plot Plan
C.2-2	Expanded View of Process Area
C.2-3	BPIP Model Output
C.2-4a, b	Receptor Grids
C.2-5	Mohave Desert Air District Monitoring Stations

Modeling input/output files are included in the enclosed CD's.

Station ID: 23161
Year: 2001 2002 2003 2004
Date Range: Jan 1 - Dec 31
Time Range: 00:00 - 23:00

Run ID: DAGGETT/FAA AIRPORT

Table C.2-1 (5 pages)

Annual - All Months

Frequency Distribution
(Count)

Wind Direction (Blowing From) / Wind Speed (m/s)

	0.5 - 2.1	2.1 - 3.6	3.6 - 5.7	5.7 - 8.8	8.8 - 11.1	>= 11.1	Total
348.75-11.25	172	178	58	26	5	2	441
11.25-33.75	146	225	114	61	6	2	554
33.75-56.25	196	375	217	41	6	1	836
56.25-78.75	250	539	374	77	4	0	1244
78.75-101.25	252	506	297	117	26	4	1202
101.25-123.75	224	249	106	56	9	0	644
123.75-146.25	175	114	39	26	7	0	361
146.25-168.75	174	107	24	29	1	1	336
168.75-191.25	175	97	25	15	2	2	316
191.25-213.75	127	89	45	64	20	16	361
213.75-236.25	182	185	199	714	408	266	1954
236.25-258.75	384	684	1472	1616	975	710	5841
258.75-281.25	567	1756	3971	1995	548	440	9277
281.25-303.75	469	1389	2363	1229	85	34	5569
303.75-326.25	279	505	669	247	11	1	1712
326.25-348.75	151	200	127	22	3	0	503
Total	3923	7198	10100	6335	2116	1479	33719

Frequency of Calm Winds: 2568
Average Wind Speed: 4.87 m/s

WRPLOT View - Lakes Environmental Software

Station ID: 23161
Year: 2001 2002 2003 2004
Date Range: Sep 1 - Nov 30
Time Range: 00:00 - 23:00

Run ID: DAGGETT/FAA AIRPORT

Autumn Months (Sep-Nov)

Frequency Distribution
(Count)

Wind Direction (Blowing From) / Wind Speed (m/s)

	0.5 - 2.1	2.1 - 3.6	3.6 - 5.7	5.7 - 8.8	8.8 - 11.1	>= 11.1	Total
348.75-11.25	50	29	13	11	4	1	108
11.25-33.75	48	51	29	19	2	0	149
33.75-56.25	64	115	50	8	1	0	238
56.25-78.75	76	184	122	15	0	0	397
78.75-101.25	78	176	82	25	5	0	366
101.25-123.75	62	74	28	11	1	0	176
123.75-146.25	51	33	7	5	0	0	96
146.25-168.75	58	43	14	7	1	0	123
168.75-191.25	56	39	7	6	0	0	108
191.25-213.75	44	21	10	12	10	5	102
213.75-236.25	62	60	60	139	70	39	430
236.25-258.75	135	195	454	300	110	88	1282
258.75-281.25	202	519	1113	364	81	63	2342
281.25-303.75	129	423	561	188	17	3	1321
303.75-326.25	76	139	130	30	1	0	376
326.25-348.75	44	33	19	6	0	0	102
Total	1235	2134	2699	1146	303	199	8460

Frequency of Calm Winds: 744
Average Wind Speed: 4.20 m/s

WRPLOT View - Lakes Environmental Software

Station ID: 23161
Year: 2001 2002 2003 2004
Date Range: Mar 1 - May 31
Time Range: 00:00 - 23:00

Run ID: DAGGETT/FAA AIRPORT

Spring Months (Mar-May)

Frequency Distribution
(Count)

Wind Direction (Blowing From) / Wind Speed (m/s)

	0.5 - 2.1	2.1 - 3.6	3.6 - 5.7	5.7 - 8.8	8.8 - 11.1	>= 11.1	Total
348.75-11.25	45	56	25	10	1	0	137
11.25-33.75	25	54	27	24	2	2	134
33.75-56.25	41	94	63	14	1	1	214
56.25-78.75	34	115	84	14	0	0	247
78.75-101.25	34	84	58	16	2	0	194
101.25-123.75	38	41	20	6	4	0	109
123.75-146.25	20	14	5	6	1	0	46
146.25-168.75	22	14	3	4	0	0	43
168.75-191.25	27	14	5	1	0	1	48
191.25-213.75	24	21	12	15	4	6	82
213.75-236.25	25	40	50	224	176	159	674
236.25-258.75	36	98	323	538	426	388	1809
258.75-281.25	61	298	925	662	265	230	2441
281.25-303.75	78	253	596	420	42	21	1410
303.75-326.25	53	140	176	105	5	0	479
326.25-348.75	28	57	32	9	1	0	127
Total	591	1393	2404	2068	930	808	8523

Frequency of Calm Winds: 329
Average Wind Speed: 6.10 m/s

WRPLOT View - Lakes Environmental Software

Station ID: 23161
Year: 2001 2002 2003 2004
Date Range: Jun 1 - Aug 31
Time Range: 00:00 - 23:00

Run ID: DAGGETT/FAA AIRPORT

Summer Months (Jun-Aug)

Frequency Distribution
(Count)

Wind Direction (Blowing From) / Wind Speed (m/s)

	0.5 - 2.1	2.1 - 3.6	3.6 - 5.7	5.7 - 8.8	8.8 - 11.1	>= 11.1	Total
348.75-11.25	36	77	12	1	0	0	126
11.25-33.75	29	76	30	0	0	0	135
33.75-56.25	25	97	59	9	0	0	190
56.25-78.75	28	83	75	15	0	0	201
78.75-101.25	15	79	74	25	12	2	207
101.25-123.75	14	39	28	24	2	0	107
123.75-146.25	17	24	23	14	5	0	83
146.25-168.75	10	9	5	17	0	1	42
168.75-191.25	7	5	9	7	2	1	31
191.25-213.75	11	11	15	25	3	4	69
213.75-236.25	13	28	62	296	141	51	591
236.25-258.75	19	130	432	651	320	110	1662
258.75-281.25	45	282	1141	701	133	64	2366
281.25-303.75	50	238	776	498	14	6	1582
303.75-326.25	36	117	271	97	2	1	524
326.25-348.75	33	78	62	4	2	0	179
Total	388	1373	3074	2384	636	240	8321

Frequency of Calm Winds: 226
Average Wind Speed: 5.60 m/s

WRPLOT View - Lakes Environmental Software

Station ID: 23161
Year: 2001 2002 2003 2004
Date Range: Check Date Range Report
Time Range: 00:00 - 23:00

Run ID: DAGGETT/FAA AIRPORT

Winter Months (Dec-Feb)

Frequency Distribution
(Count)

Wind Direction (Blowing From) / Wind Speed (m/s)

	0.5 - 2.1	2.1 - 3.6	3.6 - 5.7	5.7 - 8.8	8.8 - 11.1	>= 11.1	Total
348.75-11.25	41	16	8	4	0	1	70
11.25-33.75	44	44	28	18	2	0	136
33.75-56.25	66	69	45	10	4	0	194
56.25-78.75	112	157	93	33	4	0	399
78.75-101.25	125	167	83	51	7	2	435
101.25-123.75	110	95	30	15	2	0	252
123.75-146.25	87	43	4	1	1	0	136
146.25-168.75	84	41	2	1	0	0	128
168.75-191.25	85	39	4	1	0	0	129
191.25-213.75	47	36	8	12	3	1	107
213.75-236.25	82	57	27	55	21	17	259
236.25-258.75	193	261	260	127	119	124	1084
258.75-281.25	259	654	788	268	69	83	2121
281.25-303.75	212	475	423	122	12	4	1248
303.75-326.25	113	108	91	15	3	0	330
326.25-348.75	46	32	14	3	0	0	95
Total	1706	2294	1908	736	247	232	8391

Frequency of Calm Winds: 1268
Average Wind Speed: 3.56 m/s

WRPLOT View - Lakes Environmental Software

Station ID: 23161
Year: 2001 2002 2003 2004
Date Range: Jan 1 - Dec 31
Time Range: 00:00 - 23:00

Run ID: DAGGETT/FAA AIRPORT

Table C.2-2 (5 pages)

Annual - All Months

Frequency Distribution
(Normalized)

Wind Direction (Blowing From) / Wind Speed (m/s)

	0.5 - 2.1	2.1 - 3.6	3.6 - 5.7	5.7 - 8.8	8.8 - 11.1	>= 11.1	Total
348.75-11.25	0.005101	0.005279	0.001720	0.000771	0.000148	0.000059	0.013079
11.25-33.75	0.004330	0.006673	0.003381	0.001809	0.000178	0.000059	0.016430
33.75-56.25	0.005813	0.011121	0.006436	0.001216	0.000178	0.000030	0.024793
56.25-78.75	0.007414	0.015985	0.011092	0.002284	0.000119	0.000000	0.036893
78.75-101.25	0.007474	0.015006	0.008808	0.003470	0.000771	0.000119	0.035648
101.25-123.75	0.006643	0.007385	0.003144	0.001661	0.000267	0.000000	0.019099
123.75-146.25	0.005190	0.003381	0.001157	0.000771	0.000208	0.000000	0.010706
146.25-168.75	0.005160	0.003173	0.000712	0.000860	0.000030	0.000030	0.009965
168.75-191.25	0.005190	0.002877	0.000741	0.000445	0.000059	0.000059	0.009372
191.25-213.75	0.003766	0.002639	0.001335	0.001898	0.000593	0.000475	0.010706
213.75-236.25	0.005398	0.005487	0.005902	0.021175	0.012100	0.007889	0.057950
236.25-258.75	0.011388	0.020285	0.043655	0.047926	0.028915	0.021056	0.173226
258.75-281.25	0.016815	0.052077	0.117767	0.059165	0.016252	0.013049	0.275127
281.25-303.75	0.013909	0.041193	0.070079	0.036448	0.002521	0.001008	0.165159
303.75-326.25	0.008274	0.014977	0.019840	0.007325	0.000326	0.000030	0.050773
326.25-348.75	0.004478	0.005931	0.003766	0.000652	0.000089	0.000000	0.014917
Total	0.116344	0.213470	0.299534	0.187876	0.062754	0.043863	0.923841

Frequency of Calm Winds: 7.62%
Average Wind Speed: 4.87 m/s

WRPLOT View - Lakes Environmental Software

Station ID: 23161
Year: 2001 2002 2003 2004
Date Range: Sep 1 - Nov 30
Time Range: 00:00 - 23:00

Run ID: DAGGETT/FAA AIRPORT

Autumn Months (Sep-Nov)

Frequency Distribution
(Normalized)

Wind Direction (Blowing From) / Wind Speed (m/s)

	0.5 - 2.1	2.1 - 3.6	3.6 - 5.7	5.7 - 8.8	8.8 - 11.1	>= 11.1	Total
348.75-11.25	0.005910	0.003428	0.001537	0.001300	0.000473	0.000118	0.012766
11.25-33.75	0.005674	0.006028	0.003428	0.002246	0.000236	0.000000	0.017612
33.75-56.25	0.007565	0.013593	0.005910	0.000946	0.000118	0.000000	0.028132
56.25-78.75	0.008983	0.021749	0.014421	0.001773	0.000000	0.000000	0.046927
78.75-101.25	0.009220	0.020804	0.009693	0.002955	0.000591	0.000000	0.043262
101.25-123.75	0.007329	0.008747	0.003310	0.001300	0.000118	0.000000	0.020804
123.75-146.25	0.006028	0.003901	0.000827	0.000591	0.000000	0.000000	0.011348
146.25-168.75	0.006856	0.005083	0.001655	0.000827	0.000118	0.000000	0.014539
168.75-191.25	0.006619	0.004610	0.000827	0.000709	0.000000	0.000000	0.012766
191.25-213.75	0.005201	0.002482	0.001182	0.001418	0.001182	0.000591	0.012057
213.75-236.25	0.007329	0.007092	0.007092	0.016430	0.008274	0.004610	0.050827
236.25-258.75	0.015957	0.023050	0.053664	0.035461	0.013002	0.010402	0.151537
258.75-281.25	0.023877	0.061348	0.131560	0.043026	0.009574	0.007447	0.276832
281.25-303.75	0.015248	0.050000	0.066312	0.022222	0.002009	0.000355	0.156147
303.75-326.25	0.008983	0.016430	0.015366	0.003546	0.000118	0.000000	0.044444
326.25-348.75	0.005201	0.003901	0.002246	0.000709	0.000000	0.000000	0.012057
Total	0.145981	0.252246	0.319031	0.135461	0.035816	0.023522	0.912057

Frequency of Calm Winds: 8.79%
Average Wind Speed: 4.20 m/s

WRPLOT View - Lakes Environmental Software

Station ID: 23161
Year: 2001 2002 2003 2004
Date Range: Mar 1 - May 31
Time Range: 00:00 - 23:00

Run ID: DAGGETT/FAA AIRPORT

Spring Months (Mar-May)

Frequency Distribution
(Normalized)

Wind Direction (Blowing From) / Wind Speed (m/s)

	0.5 - 2.1	2.1 - 3.6	3.6 - 5.7	5.7 - 8.8	8.8 - 11.1	>= 11.1	Total
348.75-11.25	0.005280	0.006570	0.002933	0.001173	0.000117	0.000000	0.016074
11.25-33.75	0.002933	0.006336	0.003168	0.002816	0.000235	0.000235	0.015722
33.75-56.25	0.004811	0.011029	0.007392	0.001643	0.000117	0.000117	0.025109
56.25-78.75	0.003989	0.013493	0.009856	0.001643	0.000000	0.000000	0.028980
78.75-101.25	0.003989	0.009856	0.006805	0.001877	0.000235	0.000000	0.022762
101.25-123.75	0.004459	0.004811	0.002347	0.000704	0.000469	0.000000	0.012789
123.75-146.25	0.002347	0.001643	0.000587	0.000704	0.000117	0.000000	0.005397
146.25-168.75	0.002581	0.001643	0.000352	0.000469	0.000000	0.000000	0.005045
168.75-191.25	0.003168	0.001643	0.000587	0.000117	0.000000	0.000117	0.005632
191.25-213.75	0.002816	0.002464	0.001408	0.001760	0.000469	0.000704	0.009621
213.75-236.25	0.002933	0.004693	0.005866	0.026282	0.020650	0.018655	0.079080
236.25-258.75	0.004224	0.011498	0.037897	0.063123	0.049982	0.045524	0.212249
258.75-281.25	0.007157	0.034964	0.108530	0.077672	0.031092	0.026986	0.286402
281.25-303.75	0.009152	0.029684	0.069928	0.049278	0.004928	0.002464	0.165435
303.75-326.25	0.006218	0.016426	0.020650	0.012320	0.000587	0.000000	0.056201
326.25-348.75	0.003285	0.006688	0.003755	0.001056	0.000117	0.000000	0.014901
Total	0.069342	0.163440	0.282060	0.242638	0.109117	0.094802	0.961399

Frequency of Calm Winds: 3.86%
Average Wind Speed: 6.10 m/s

WRPLOT View - Lakes Environmental Software

Station ID: 23161
Year: 2001 2002 2003 2004
Date Range: Jun 1 - Aug 31
Time Range: 00:00 - 23:00

Run ID: DAGGETT/FAA AIRPORT

Summer Months (Jun-Aug)

Frequency Distribution
(Normalized)

Wind Direction (Blowing From) / Wind Speed (m/s)

	0.5 - 2.1	2.1 - 3.6	3.6 - 5.7	5.7 - 8.8	8.8 - 11.1	>= 11.1	Total
348.75-11.25	0.004326	0.009254	0.001442	0.000120	0.000000	0.000000	0.015142
11.25-33.75	0.003485	0.009134	0.003605	0.000000	0.000000	0.000000	0.016224
33.75-56.25	0.003004	0.011657	0.007090	0.001082	0.000000	0.000000	0.022834
56.25-78.75	0.003365	0.009975	0.009013	0.001803	0.000000	0.000000	0.024156
78.75-101.25	0.001803	0.009494	0.008893	0.003004	0.001442	0.000240	0.024877
101.25-123.75	0.001682	0.004687	0.003365	0.002884	0.000240	0.000000	0.012859
123.75-146.25	0.002043	0.002884	0.002764	0.001682	0.000601	0.000000	0.009975
146.25-168.75	0.001202	0.001082	0.000601	0.002043	0.000000	0.000120	0.005047
168.75-191.25	0.000841	0.000601	0.001082	0.000841	0.000240	0.000120	0.003726
191.25-213.75	0.001322	0.001322	0.001803	0.003004	0.000361	0.000481	0.008292
213.75-236.25	0.001562	0.003365	0.007451	0.035573	0.016945	0.006129	0.071025
236.25-258.75	0.002283	0.015623	0.051917	0.078236	0.038457	0.013220	0.199736
258.75-281.25	0.005408	0.033890	0.137123	0.084245	0.015984	0.007691	0.284341
281.25-303.75	0.006009	0.028602	0.093258	0.059849	0.001682	0.000721	0.190121
303.75-326.25	0.004326	0.014061	0.032568	0.011657	0.000240	0.000120	0.062973
326.25-348.75	0.003966	0.009374	0.007451	0.000481	0.000240	0.000000	0.021512
Total	0.046629	0.165004	0.369427	0.286504	0.076433	0.028843	0.972840

Frequency of Calm Winds: 2.72%
Average Wind Speed: 5.60 m/s

WRPLOT View - Lakes Environmental Software

Station ID: 23161
Year: 2001 2002 2003 2004
Date Range: Check Date Range Report
Time Range: 00:00 - 23:00

Run ID: DAGGETT/FAA AIRPORT

Winter Months (Dec-Feb)

Frequency Distribution
(Normalized)

Wind Direction (Blowing From) / Wind Speed (m/s)

	0.5 - 2.1	2.1 - 3.6	3.6 - 5.7	5.7 - 8.8	8.8 - 11.1	>= 11.1	Total
348.75-11.25	0.004886	0.001907	0.000953	0.000477	0.000000	0.000119	0.008342
11.25-33.75	0.005244	0.005244	0.003337	0.002145	0.000238	0.000000	0.016208
33.75-56.25	0.007866	0.008223	0.005363	0.001192	0.000477	0.000000	0.023120
56.25-78.75	0.013348	0.018711	0.011083	0.003933	0.000477	0.000000	0.047551
78.75-101.25	0.014897	0.019902	0.009892	0.006078	0.000834	0.000238	0.051841
101.25-123.75	0.013109	0.011322	0.003575	0.001788	0.000238	0.000000	0.030032
123.75-146.25	0.010368	0.005125	0.000477	0.000119	0.000119	0.000000	0.016208
146.25-168.75	0.010011	0.004886	0.000238	0.000119	0.000000	0.000000	0.015254
168.75-191.25	0.010130	0.004648	0.000477	0.000119	0.000000	0.000000	0.015374
191.25-213.75	0.005601	0.004290	0.000953	0.001430	0.000358	0.000119	0.012752
213.75-236.25	0.009772	0.006793	0.003218	0.006555	0.002503	0.002026	0.030866
236.25-258.75	0.023001	0.031105	0.030986	0.015135	0.014182	0.014778	0.129186
258.75-281.25	0.030866	0.077941	0.093910	0.031939	0.008223	0.009892	0.252771
281.25-303.75	0.025265	0.056608	0.050411	0.014539	0.001430	0.000477	0.148731
303.75-326.25	0.013467	0.012871	0.010845	0.001788	0.000358	0.000000	0.039328
326.25-348.75	0.005482	0.003814	0.001668	0.000358	0.000000	0.000000	0.011322
Total	0.203313	0.273388	0.227386	0.087713	0.029436	0.027649	0.848886

Frequency of Calm Winds: 15.11%
Average Wind Speed: 3.56 m/s

WRPLOT View - Lakes Environmental Software

BARSTOW, CALIFORNIA

Table C.2-3 (3 Pages)

NCDC 1961-1990 Monthly Normals

	Jan	Feb	Mar	Apr	May	Jun	Jul	Aug	Sep	Oct	Nov	Dec	Annual
Mean Max. Temperature (F)	57.0	62.2	69.9	78.6	85.5	92.1	92.8	91.1	85.0	77.4	66.1	58.7	76.4
Highest Mean Max. Temperature (F)	64.7	71.3	79.1	83.8	92.5	100.4	97.4	95.8	92.1	84.4	74.7	65.8	78.3
Year Highest Occurred	1986	1976	1974	1972	1989	1990	1980	1964	1977	1979	1966	1970	1989
Lowest Mean Max. Temperature (F)	49.0	56.1	57.7	72.2	81.2	87.4	86.6	84.4	77.8	69.9	57.9	51.7	73.9
Year Lowest Occurred	1979	1973	1969	1983	1976	1979	1976	1971	1974	1969	1961	1967	1968
Mean Temperature (F)	42.5	47.0	54.1	63.0	70.5	77.7	79.8	78.2	72.1	63.0	52.0	44.3	62.0
Highest Mean Temperature (F)	48.1	54.6	61.6	67.9	75.3	84.8	83.7	81.8	77.3	66.6	58.0	49.7	63.4
Year Highest Occurred	1965	1976	1974	1967	1989	1990	1966	1983	1977	1979	1965	1970	1986
Lowest Mean Temperature (F)	36.2	39.7	44.7	57.0	66.6	73.7	74.8	73.8	66.0	56.9	45.1	37.6	60.0
Year Lowest Occurred	1963	1964	1969	1983	1976	1979	1976	1971	1974	1976	1976	1983	1988
Mean Min. Temperature (F)	28.0	31.9	38.4	47.3	55.4	63.2	66.6	65.3	59.1	48.7	37.8	29.9	47.6
Highest Mean Min. Temperature (F)	34.0	37.9	44.1	53.7	59.3	69.2	70.8	68.6	62.6	53.7	43.5	35.5	49.8
Year Highest Occurred	1981	1976	1967	1967	1984	1990	1969	1982	1983	1983	1965	1965	1986
Lowest Mean Min. Temperature (F)	19.0	21.9	30.9	41.5	50.5	60.0	62.5	61.1	54.2	41.7	30.8	22.8	45.6
Year Lowest Occurred	1963	1964	1965	1987	1987	1979	1961	1975	1974	1976	1976	1983	1988
Mean Precipitation (in.)	0.37	0.57	0.56	0.73	2.00	1.91	2.51	2.71	2.60	1.43	0.77	0.62	16.78
Highest Precipitation (in.)	1.73	2.21	2.11	2.86	6.01	5.09	9.41	9.06	8.46	8.15	4.33	5.08	27.34
Year Highest Occurred	1983	1973	1968	1981	1987	1986	1988	1984	1974	1985	1978	1986	1974
Lowest Precipitation (in.)	0.00	0.02	0.00	0.00	0.07	0.00	0.22	0.37	0.11	0.00	0.00	0.00	7.45
Year Lowest Occurred	1970	1984	1984	1989	1967	1990	1980	1964	1968	1989	1989	1976	1967
Heating Degree Days (F)	698.	504.	354.	121.	17.	0.	0.	0.	9.	111.	395.	642.	2851.
Cooling Degree Days (F)	0.	0.	16.	61.	188.	381.	459.	409.	222.	49.	5.	0.	1790.

Western Regional Climate Center, wrcc@dri.edu

BARSTOW, CALIFORNIA (040519)

Period of Record Monthly Climate Summary

Period of Record : 1/ 1/1903 to 3/31/1980

	Jan	Feb	Mar	Apr	May	Jun	Jul	Aug	Sep	Oct	Nov	Dec	Annual
Average Max. Temperature (F)	59.8	64.8	70.0	77.6	86.0	95.8	102.4	100.4	93.8	82.4	69.5	60.7	80.3
Average Min. Temperature (F)	31.5	35.4	39.7	45.5	52.4	60.3	66.6	64.7	57.9	47.6	37.1	31.3	47.5
Average Total Precipitation (in.)	0.72	0.59	0.61	0.21	0.08	0.12	0.27	0.31	0.26	0.27	0.37	0.51	4.33
Average Total SnowFall (in.)	0.7	0.1	0.1	0.0	0.0	0.0	0.0	0.0	0.0	0.0	0.0	0.4	1.3
Average Snow Depth (in.)	0	0	0	0	0	0	0	0	0	0	0	0	0

Percent of possible observations for period of record.
Max. Temp.: 71.9% Min. Temp.: 71.8% Precipitation: 72.2% Snowfall: 71.4% Snow Depth: 71.4%
Check Station Metadata or Metadata graphics for more detail about data completeness.

Western Regional Climate Center, wrcc@dri.edu

I-173

BARSTOW FIRE STATION, CALIFORNIA

Period of Record General Climate Summary - Temperature

Station:(040521) BARSTOW FIRE STATION

From Year=1980 To Year=2008

	Monthly Averages			Daily Extremes				Monthly Extremes				Max. Temp.		T
	Max.	Min.	Mean	High	Date	Low	Date	Highest Mean	Year	Lowest Mean	Year	>= 90 F	<= 32 F	<= 32
	F	F	F	F	dd/yyyy or yyyymmdd	F	dd/yyyy or yyyymmdd	F	-	F	-	# Days	# Days	# Day
January	60.6	34.4	47.5	78	15/1996	12	14/2007	53.2	1996	44.1	2007	0.0	0.0	11
February	64.7	38.0	51.3	87	26/1986	18	01/1985	60.5	1995	47.1	2001	0.0	0.0	5
March	70.9	42.7	56.9	92	20/1997	26	05/1985	62.4	2004	50.8	2006	0.3	0.0	1
April	78.4	48.4	63.4	98	30/1981	30	02/1999	69.8	1989	55.5	1983	3.4	0.0	0
May	86.6	55.1	70.9	107	28/2003	32	10/1980	77.2	1997	62.7	1991	13.1	0.0	0
June	96.6	63.1	79.9	112	22/1995	43	01/1988	84.4	2006	75.0	1982	25.6	0.0	0
July	102.0	69.0	85.5	115	28/1995	48	06/1986	90.2	2006	78.9	1986	30.5	0.0	0
August	100.8	67.8	84.3	112	08/1997	51	25/1987	88.1	1998	80.2	1989	30.1	0.0	0
September	93.7	61.2	77.4	109	03/1995	40	30/1982	81.5	2003	70.2	1986	23.1	0.0	0
October	82.2	51.1	66.7	101	01/1980	33	30/1981	73.3	1988	61.0	1981	6.2	0.0	0
November	68.7	40.9	54.8	89	04/1989	20	20/1994	64.0	1995	48.0	1994	0.0	0.0	4
December	59.2	33.4	46.3	76	14/1988	8	22/1990	51.9	1980	41.2	1990	0.0	0.0	14
Annual	80.4	50.4	65.4	115	19950728	8	19901222	67.9	1996	62.8	1982	132.3	0.0	38
Winter	61.5	35.3	48.4	87	19860226	8	19901222	53.3	1996	44.9	1985	0.0	0.0	32
Spring	78.6	48.7	63.7	107	20030528	26	19850305	67.8	1997	58.0	1991	16.8	0.0	2
Summer	99.8	66.7	83.2	115	19950728	43	19880601	86.1	2007	79.1	1983	86.2	0.0	0
Fall	81.5	51.1	66.3	109	19950903	20	19941120	72.1	1995	61.9	1985	29.3	0.0	4

Table updated on Apr 28, 2009
For monthly and annual means, thresholds, and sums:
Months with 5 or more missing days are not considered
Years with 1 or more missing months are not considered
Seasons are climatological not calendar seasons
Winter = Dec., Jan., and Feb. Spring = Mar., Apr., and May
Summer = Jun., Jul., and Aug. Fall = Sep., Oct., and Nov.

Western Regional Climate Center, wrcc@dri.edu

Table C.2-4 (3 Pages)

MOJAVE DESERT AQMD

EXCEEDANCES OF STANDARDS AND MAXIMUM CONCENTRATIONS **2006**

STATION	OZONE					CARBON MONOXIDE					NITROGEN DIOXIDE			SULFUR DIOXIDE			
	days over state std	days over federal 1hr/8hr	max 8hr ppm	max 1hr ppm	avg 1hr ppm	days over state 1hr/8hr	days over federal 1hr/8hr	max 8hr ppm	max 1hr ppm	avg 1hr ppm	days over state std	max 1hr ppm	avg 1hr ppm	days over state 24h/1h	max 24hr ppm	max 1hr ppm	avg 1hr ppm
29P ADOBE	na	na/na	inc	inc	inc	na/na	na/na	na	na	na	na	na	na	na/na	na	na	na
BARSTOW	4	0 / 6	0.094	0.112	0.031	0/0	0/0	1.1	3.5	0.2	0	0.082	0.022	na/na	na	na	na
HESPERIA	22	2 / 18	0.124	0.148	0.038	na/na	na/na	na	na	na	na	na	na	na/na	na	na	na
PHELAN	25	2 / 19	0.111	0.137	0.045	na/na	na/na	na	na	na	na	na	na	na/na	na	na	na
TRONA	0	0 / 0	0.084	0.091	0.038	NM	NM	NM	NM	NM	0	0.050	0.005	0/0	0.004	0.033	0.001
VICTORVILLE	9	1 / 6	0.105	0.136	0.032	0/0	0/0	1.5	2.2	0.3	0	0.079	0.020	0/0	0.005	0.018	0.001
LANCASTER AVAQMD	22	2 / 16	0.105	0.132	0.036	0/0	0/0	1.6	3.2	0.2	0	0.066	0.015	na/na	na	na	na
Apple Valley	na	na/na	na	na	na	na/na	na/na	na	na	na	na	na	na	na/na	na	na	na
29P MARINES	4	0 / 0	0.084	0.100	0.041	0/0	0/0	inc	inc	inc	inc	inc	inc	0/0	inc	inc	inc
MCLB	na	na/na	na	na	na	na/na	na/na	na	na	na	inc	inc	inc	na/na	na	na	na
MDAQMD Totals	**36**	**3 / 30**	**0.124**	**0.148**	**0.037**	**0/0**	**0/0**	**1.5**	**3.5**	**0.3**	**0**	**0.082**	**0.015**	**0**	**0.005**	**0.033**	**0.001**

STATION	WIND SPEED (MPH)					TEOM (PM10) (ug/m3)				TEMP (deg F)			HUMIDITY (%)			SOLAR RAD
	PEAK SPEED		AVERAGE SPEED													
	days w/1hr >40mph	max peak mph	days 24hr avg >30mph	max 1hr avg mph	avg hourly mph	max 1hr pm10 avg	max daily pm10 avg	days avg over 50ug/m3	monthly avg pm10	max 1hr tmp	min 1hr tmp	monthly avg tmp	max 1hr RH %	min 1hr RH %	monthly avg RH %	Avg daily solar Radiation
29P ADOBE	na	na	na	na	na	NM	NM	NM	NM	na	na	na	na	na	na	NM
BARSTOW	12	47	0	28	7.2	NM	NM	NM	NM	112	21	65	94	1	32	NM
HESPERIA	6	48	0	29	7.1	NM	NM	NM	NM	101	28	62	NM	NM	NM	NM
PHELAN	6	50	1	34	7.4	NM	NM	NM	NM	97	28	59	NM	NM	NM	NM
TRONA	20	52	6	35	5.5	882	184	11	23	112	24	68	NM	NM	NM	NM
VICTORVILLE	8	65	2	36	7.2	940	168	34	32	103	24	62	NM	NM	NM	0.328
LANCASTER AVAQMD	1	44	0	23	4.8	198	66	0	24	105	24	62	100	9	40	NM
Apple Valley	na	na	na	na	na	na	na	na	na	na	na	na	na	na	na	NM
29P MARINES	4	47	0	28	6.1	909	208	24	28	114	27	70	96	3	28	NM
MCLB	na	na	na	na	na	na	na	na	na	na	na	na	na	na	na	NM
LUCERNE	na	na	na	na	na	NM	NM	NM	NM	na	na	na	NM	NM	NM	NM
MDAQMD Totals	**30**	**65**	**8**	**36**	**6.9**	**940**	**184**	**41**	**27**	**112**	**21**	**63**	**94**	**1**	**32**	**0.328**

NM: Never Monitored
na: not active

Note: Included in MDAQMD totals are Barstow, Hesperia, Phelan, 29Palms, Trona, and Victorville.

06/14
2007

Air Quality Management District

EXCEEDANCES OF STANDARDS AND MAXIMUM CONCENTRATIONS 2007

STATION	OZONE					CARBON MONOXIDE					NITROGEN DIOXIDE			SULFUR DIOXIDE			
	days over state std	days over federal 1hr/8hr	max 8hr ppm	max 1hr ppm	avg 1hr ppm	days over state 1hr/8hr	days over federal 1hr/8hr	max 8hr ppm	max 1hr ppm	avg 1hr ppm	days over state std	max 1hr ppm	avg 1hr ppm	days over state 24h/1h	max 24hr ppm	max 1hr ppm	avg 1hr ppm
BARSTOW	2	0 / 3	0.088	0.099	0.032	0/0	0/0	0.7	1.4	0.126	0	0.073	0.020	na/na	na	na	na
HESPERIA	24	2 / 21	0.109	0.132	0.040	na/na	na/na	na	na	na	na	na	na	na/na	na	na	na
PHELAN	18	0 / 8	0.095	0.119	0.046	na/na	na/na	na	na	na	na	na	na	na/na	na	na	na
TRONA	0	0 / 0	0.084	0.094	0.040	NM	NM	NM	NM	NM	0	0.055	0.004	0/0	0.005	0.014	0.001
VICTORVILLE	7	0 / 6	0.090	0.107	0.033	0/0	0/0	1.6	2.1	0.237	0	0.071	0.018	0/0	0.005	0.009	0.001
LANCASTER AVAQMD	16	0 / 14	0.101	0.118	0.038	0/0	0/0	1.2	2.5	0.202	0	0.064	0.014	na/na	na	na	na
29P MARINES	0	0 / 0	0.083	0.094	0.042	0/0	0/0	inc	inc	inc	inc	inc	inc	0/0	inc	inc	inc
MDAQMD Totals	**29**	**2 / 26**	**0.109**	**0.132**	**0.038**	**0/0**	**0/0**	**1.6**	**2.1**	**0.181**	**0**	**0.073**	**0.014**	**0**	**0.005**	**0.014**	**0.001**

STATION	WIND SPEED (MPH)					TEOM (PM10) (ug/m3)				TEMP (deg F)			HUMIDITY (%)			R RAD
	PEAK SPEED		AVERAGE SPEED													
	days w/1hr >40mph	max peak mph	days 24hr avg >30mph	max 1hr avg mph	avg hourly mph	max 1hr pm10 ug/m3	max daily pm10 ug/m3	days avg over 50ug/m3	monthly avg pm10 ug/m3	max 1hr tmp Deg F	min 1hr tmp Deg F	monthly avg tmp Deg F	max 1hr RH %	min 1hr RH %	monthly avg RH %	Avg Daily Solar Radiation Langleys
BARSTOW	13	52	0	28	7.4	NM	NM	NM	NM	111	12	66	97	0	28	NM
HESPERIA	7	50	0	30	7.6	NM	NM	NM	NM	107	18	62	NM	NM	NM	NM
PHELAN	4	45	0	29	7.4	NM	NM	NM	NM	99	14	60	NM	NM	NM	NM
TRONA	7	46	5	35	6.5	865	133	11	19	114	8	69	NM	NM	NM	NM
VICTORVILLE	15	52	2	32	7.2	950	239	35	35	107	16	63	NM	NM	NM	0.337
LANCASTER AVAQMD	2	42	0	26	4.9	267	86	8	24	109	15	63	97	8	36	NM
29P MARINES	8	55	1	31	6.4	732	251	17	29	117	18	70	100	3	27	NM
MDAQMD Totals	**28**	**52**	**6**	**35**	**7.2**	**950**	**239**	**40**	**27**	**114**	**0**	**64**	**97**	**0**	**28**	**0.337**

NM: Never Monitored
na: not active
inc: incomplete

Note: Included in MDAQMD totals are Barstow, Hesperia, Phelan, 29Palms, Trona, and Victorville.

01/14
2008

Air Quality Management District

EXCEEDANCES OF STANDARDS AND MAXIMUM CONCENTRATIONS 2008

STATION	OZONE					CARBON MONOXIDE					NITROGEN DIOXIDE			SULFUR DIOXIDE			
	days over state 1hr/8hr	days over federal 8hr	max 8hr ppm	max 1hr ppm	avg 1hr ppm	days over state 1hr/8hr	days over federal 1hr/8hr	max 8hr ppm	max 1hr ppm	avg 1hr ppm	days over state std	max 1hr ppm	avg 1hr ppm	days over state 24h/1h	max 24hr ppm	max 1hr ppm	avg 1hr ppm
BARSTOW	5 / 23	7	0.097	0.104	0.033	0/0	0/0	1.2	1.4	0.111	0	0.081	0.019	na/na	na	na	na
HESPERIA	29 / 80	58	0.107	0.132	0.041	na/na	na/na	na	na	na	na	na	na	na/na	na	na	na
PHELAN	32 / 73	50	0.106	0.130	0.046	na/na	na/na	na	na	na	na	na	na	na/na	na	na	na
TRONA	3 / 23	7	0.094	0.100	0.037	NM	NM	NM	NM	NM	0	0.062	0.004	0/0	0.004	0.036	0.001
VICTORVILLE	16 / 58	32	0.098	0.109	0.035	0/0	0/0	1.0	1.4	0.215	0	0.074	0.016	0/0	0.002	0.006	0.001
LANCASTER AVAQMD	18 / 59	39	0.103	0.116	0.038	0/0	0/0	1.0	2.2	0.167	0	0.062	0.013	na/na	na	na	na
29P MARINES	0 / 15	8	0.085	0.093	0.039	0/0	0/0	inc	inc	inc	inc	inc	inc	0/0	inc	inc	inc
MDAQMD Totals	**47 / 89**	**72**	**0.107**	**0.132**	**0.038**	**0/0**	**0/0**	**1.2**	**1.4**	**0.163**	**0**	**0.081**	**0.013**	**0**	**0.004**	**0.036**	**0.001**

STATION	WIND SPEED (MPH)					TEOM (PM10) (ug/m3)				TEMP (deg F)			HUMIDITY (%)			SOLAR RAD
	PEAK SPEED		AVERAGE SPEED													
	days w/1hr >40mph	max peak mph	days 24hr avg >30mph	max 1hr avg mph	avg hourly mph	max 1hr pm10 ug/m3	max daily pm10 ug/m3	days avg over 50ug/m3	monthly avg pm10 ug/m3	max 1hr tmp Deg F	min 1hr tmp Deg F	monthly avg tmp Deg F	max 1hr RH %	min 1hr RH %	monthly avg RH %	Avg Daily Solar Radiation Langleys
BARSTOW	40	84	8	48	8.3	NM	NM	NM	NM	107	28	66	95	0	31	NM
HESPERIA	12	53	1	33	7.4	NM	NM	NM	NM	103	28	62	NM	NM	NM	NM
PHELAN	10	58	2	36	7.4	NM	NM	NM	NM	97	26	60	NM	NM	NM	NM
TRONA	20	53	4	32	5.7	886	157	22	23	123	28	69	NM	NM	NM	NM
VICTORVILLE	20	59	1	34	7.2	927	286	23	31	103	23	62	NM	NM	NM	0.337
LANCASTER AVAQMD	0	40	0	23	4.9	690	153	16	25	108	27	64	104	8	39	NM
29P MARINES	7	55	2	32	6.3	951	368	44	32	112	28	70	100	3	31	NM

Table C.2-5 Equipment Dimensions

DESCRIPTION	Quantity	Height (ft)	Length (ft)	Width (ft)	Diameter (ft)	Weight (lb)	Force (lb/ft^2)
Warehouse (21)	2	16.5	170.0	80.0			
Water Treatment Building (11)	2	16.5	50.4	36.4			
HTF Electrical Buildings (27)	2	16.5	49.2	26.2			
Cooling Tower Electrical Buildings (26)	2	16.5	57.0	20.0			
Closed Cycle Cooling Buildings (13.1)	2	30.0	39.7	18.9			
Diesel Generator Building (23)	2	30.0	40.0	12.0			
Auxiliary Boiler Building (29)	2	30.0	50.0	28.6			
Auxiliary Boiler (inside 29)	2	15.5	20.5	14.0		65000.0	
HTF Pump House (4) **pumps are out in the open. Not housed. Individual pumps are 8.5 wide by 25.5 long by 9.5 high. Full area of all 5 pumps are ~ 60x100 if including maintenance area.*	2	23.0	81.5	70.0			
Power Plant E&C Buildings (22; part of building 10)		32.0	111.0	25.0			
Central E&C and Operations Building (10)	2	32.0	163.0	109.0			
Mirror Modules Assembly Factory (off-powerblock, NE part of solar field)	2	44.0	295.3	262.5			
Cooling Towers (12.1)	2	44.0	324.0	54.0		1200000.0	68.6
Steam Generation (5.1) **Steam generations are kept outside*	2	50.0	198.0	70.0			
STG Building (7.1 AND 8.1 are extents of building)	2	72.5	142.1	107.8			
Feedwater Heater 1 (centerline elevation) (inside 5.1)	2	4.0	15.8		2.9		
Feedwater Heater 2 (centerline elevation) (inside 5.1)	2	4.5	28.8		3.3		
Feedwater Heater 3 (centerline elevation) (inside 5.1)	2	4.0	28.8		3.3		
Feedwater Heater 4 (centerline elevation) (inside 5.1)	2	4.0	28.5		3.0		
Feedwater Heater 5 (centerline elevation) (inside 5.1)	2	4.0	31.4		3.8		
Feedwater Heater 6 (centerline elevation) (inside 5.1)	2	4.0	28.5		3.0		
Oil Preheaters (centerline elevation) (inside 5.1)		6.8	23.0		4.8		
Boilers (centerline elevation) (inside 5.1)	8	8.3	36.0		6.0		
Boiler Drums (centerline elevation) (inside 5.1)	4	32.8	26.3		5.5		
Superheaters (centerline elevation) (inside 5.1)	4	7.5	27.0		6.0		
Reheaters (centerline elevation) (inside 5.1)	4	8.0	41.0		6.5		
Deaerator (centerline elevation) (inside 5.1)	2	40.0	40.7		11.9	86200.0	
Generator Step-Up Transformer 148-175MVA (168.4MVA) (14)	4	26.0	30.0	20.0		572990.0	955.0
Auxiliary Unit Transformers 60-70MVA (60MVA) (14)	4	25.7	31.3	16.7		305210.0	583.9
Auxiliary Unit Transformers 10MVA (outside building 27)	2	13.6	13.1	13.0		59500.0	349.4
Auxiliary Unit Transformers 6MVA (out in the solar field by the Well Pumps)		8.3	11.8	11.2		44500.0	339.2
Auxiliary Unit Transformers 4MVA (out in the solar field by the Well Pumps)	2	8.3	11.8	11.2		44500.0	339.2
Auxiliary Unit Transformers 3500kVA (outside building 22)	8	6.3	5.8	7.5		20000.0	457.1
Auxiliary Unit Transformers 3000kVA (outside building 27)	2	6.3	5.8	7.5		20000.0	457.1
Auxiliary Unit Transformers 2500kVA (outside building 26)	6	6.0	5.8	6.6		14100.0	368.1
Auxiliary Unit Transformers 750kVA (located out in the solar field)	8	5.7	5.5	5.1		7400.0	265.6
Major Pipe Rack Running East to West (no number)	2		550.9	20.0			
Steam Turbine (of entire STG assembly; includes HP/IP/LP Turbine, generator centerline elevation; excludes condenser) inside of 8.1 building) **dimensions are from Seimens; should match layout.*	2	24.8	94.1	29.5		386779.0	~4000-5000
Generator (rotor centerline elevation) (inside of 8.1 building)	2	24.8	28.1	12.0		329590.0	~4000-5000

Storage Tank Descriptions and Dimensions

DESCRIPTION	Quantity	Volume (ft^3)	Volume (gal)	Max Fill (gal)	Type	Height (ft)	Length (ft)	Width (ft)	Diameter (ft)	Weight (lb)	Force (lb/ft^2)
Shop Fab Tanks (Continuous Blowdown)	2	154	1,152			6.35			5.56	8,642	356
Shop Fab Tanks (Intermittent Blowdown Tank)	2	227	1,698			6.35			6.75	12,693	355
Shop Fab Tanks (Power Plant Condensate Receiver)	2	377	2,820			11.91			6.35	21,106	667
Shop Fab Tanks (Waste Slurry Tank)	2	1,571	11,750			7.94			15.87	86,918	439
Shop Fab Tanks (CC Expansion Tank)	2	113	846			6.35			4.76	6,373	358
Field Erected Tanks (HTF Expansion Tanks) (3)	16	5,429	40,608			48.00			12.00	0	0
Field Erected Tanks (HTF Overflow Tanks) (6)	4	31,776	237,703			35.00			34.00	1,751,007	1,929
Field Erected Tanks (Polished Water) (33)	2	7,069	52,877			15.87			23.81	390,124	876
Field Erected Tanks (RO Reject Water) (32)	2	9,974	74,613			31.75			20.00	551,038	1,754
Field Erected Tanks (RO Water) (31)	2	19,244	143,952			31.75			27.78	1,061,274	1,751
Field Erected Tanks (CT Blowdown Water) (30)	2	96,208	719,689			39.69			55.56	5,293,928	2,184
Field Erected Tanks (Service Water/Fire Water) (16)	2	257,688	1,927,639			33.34			99.21	14,165,370	1,832
Field Erected Tanks (Raw Water) (17)	2	257,701	1,927,739			33.34			99.21	14,166,104	1,832
Diesel Generator Day Tank (part of 23)	2	24	180			4.00	2	3		2,773	231
Diesel Storage Tank (24)	2	873	6,528			18.50			7.75	48,687	1,032
Nitrogen Storage Vessel (inside area marked 34)	2	2,488	18,612				22		12.00	129,319	1,143

FOLD

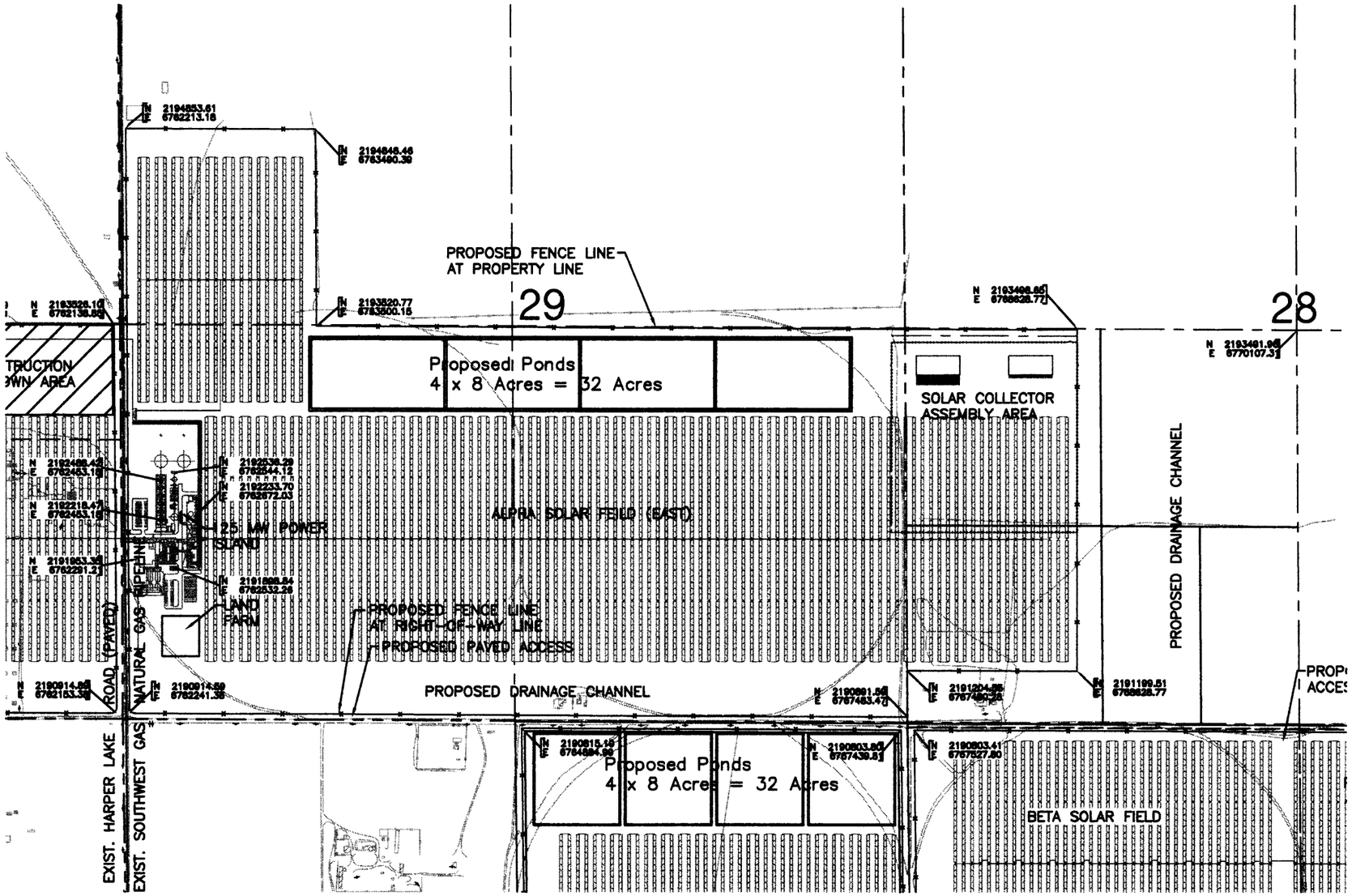

MAP LOCATION

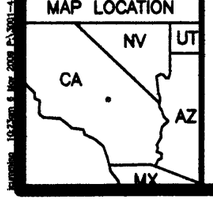

Figure C.2-1a

NOTE:
COORDINATES SHOWN HEREON ARE GRID COORDINATES BASED ON CALIFORNIA STATE PLANE ZONE 5, NAD83. TO GET GROUND DISTANCE/COORDINATES MULTIPLY BY THE COMBINATION FACTOR OF 1.00018256217

MOJAVE SOLAR PROJECT

PROJECT SITE MAP
STATE PLANE COORDINATES

0 400' 800' 1200'
SCALE: 1" = 800'

MOJAVE SOLAR LLC

Merrell-Johnson Engineering, Inc.

PROJECT:
DATE: 05/06/09

FOLD

FOLD

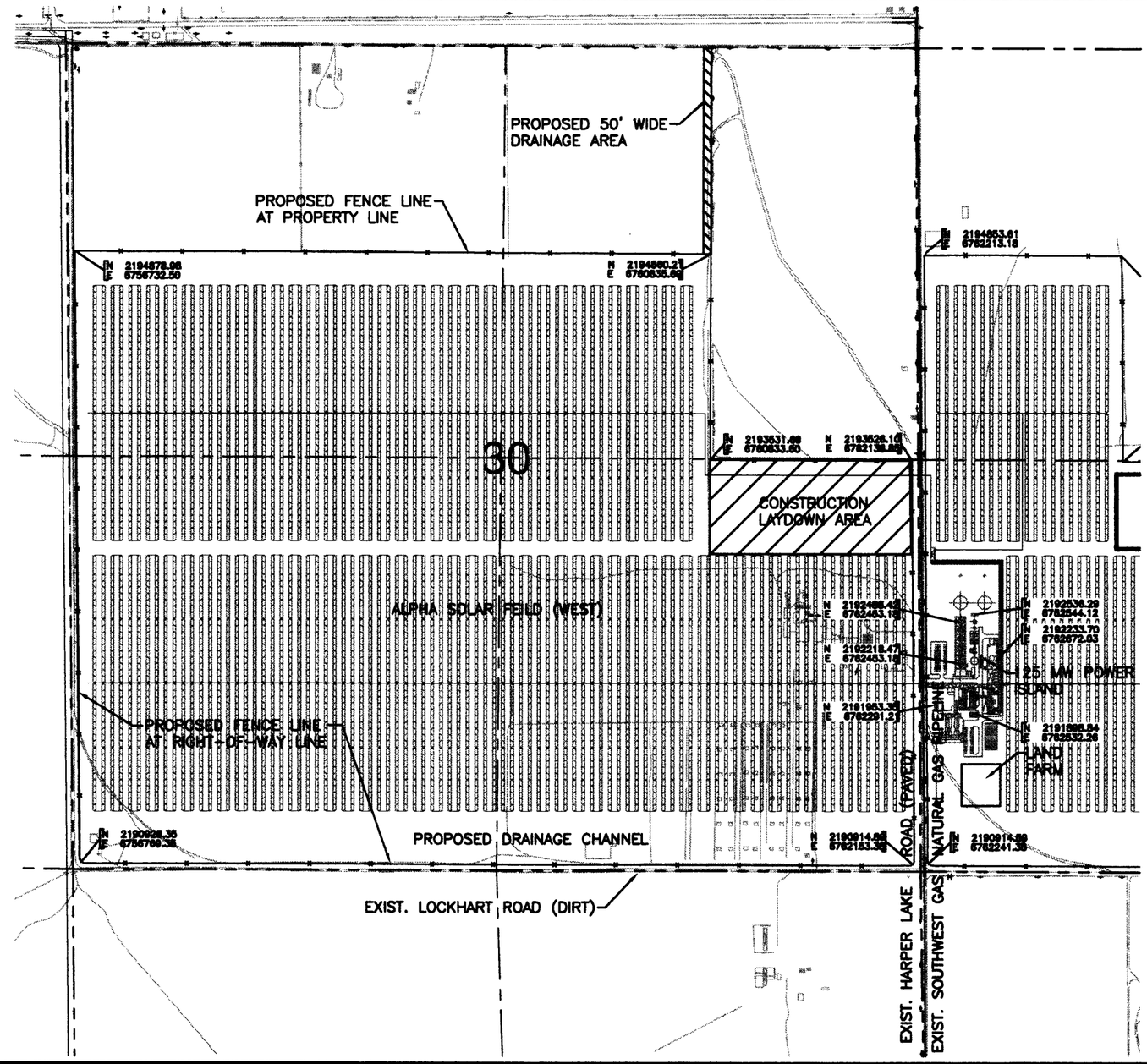

MAP LOCATION

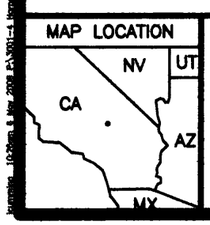

Figure C.2-1b

NOTE:
COORDINATES SHOWN HEREON ARE GRID COORDINATES BASED ON CALIFORNIA STATE PLANE ZONE 5, NAD83. TO GET GROUND DISTANCE/COORDINATES MULTIPLY BY THE COMBINATION FACTOR OF 1.00018256217

MOJAVE SOLAR PROJECT

PROJECT SITE MAP
STATE PLANE COORDINATES

0 400' 800' 1200'
SCALE: 1" = 800'

MOJAVE SOLAR LLC

Merrell-Johnson Engineering, Inc.

PROJECT:
DATE: 05/06/09

FOLD

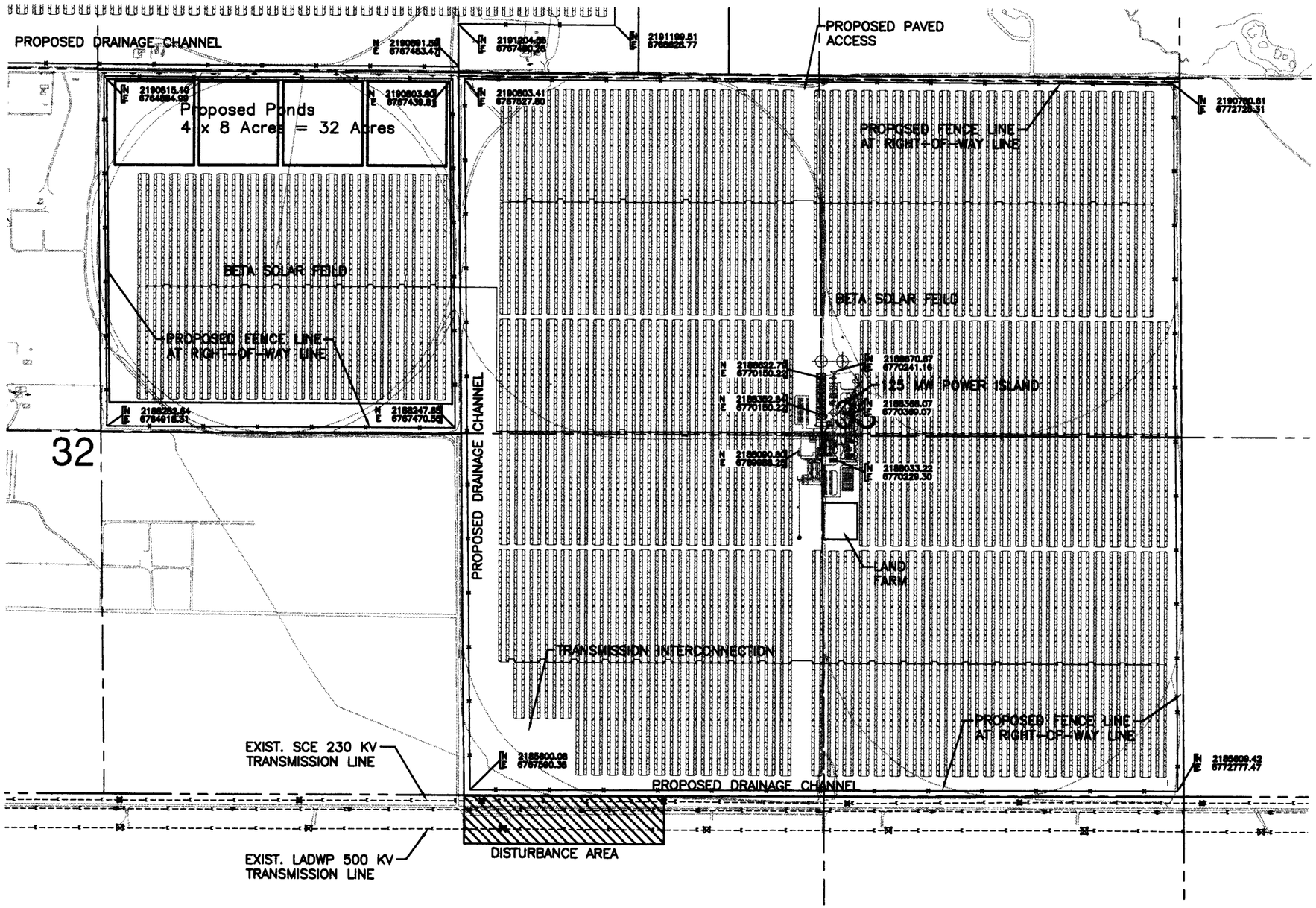

MAP LOCATION

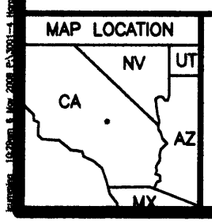

Figure C.2-1c

NOTE:
COORDINATES SHOWN HEREON ARE GRID COORDINATES BASED ON CALIFORNIA STATE PLANE ZONE 5, NAD83. TO GET GROUND DISTANCE/COORDINATES MULTIPLY BY THE COMBINATION FACTOR OF 1.00018256217

MOJAVE SOLAR PROJECT

PROJECT SITE MAP STATE PLANE COORDINATES

0 400' 800' 1200'
SCALE: 1" = 800'

MOJAVE SOLAR LLC

Merrell-Johnson Engineering, Inc.

PROJECT:
DATE: 05/06/09

ALPHA SOLAR FIELD

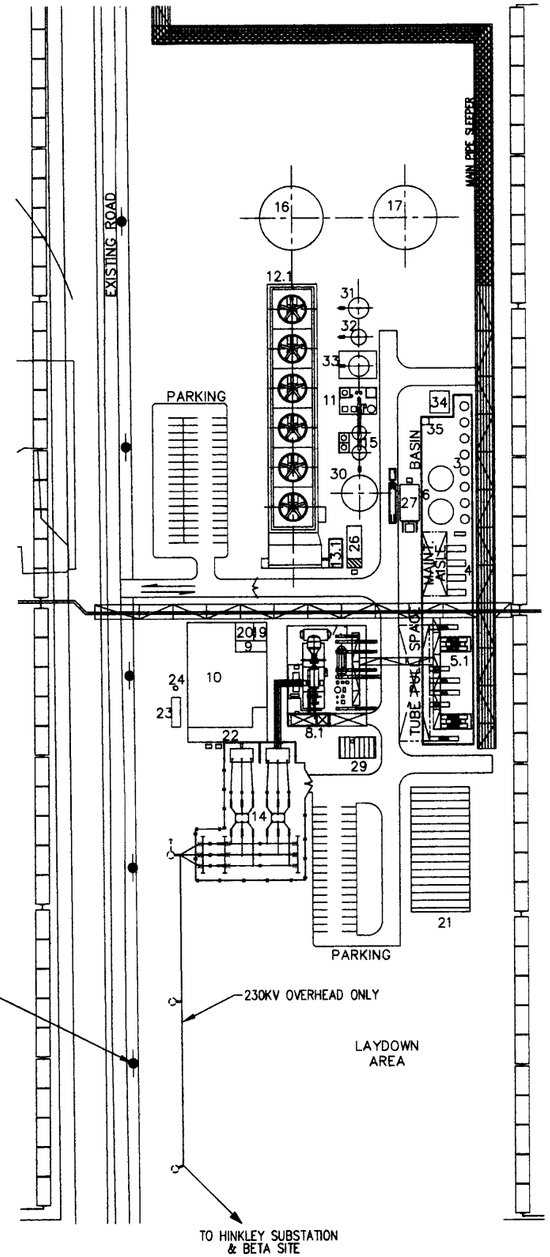

ALPHA SOLAR FIELD

PLANT NORTH

2	
3	EXPANSION VESSELS
4	HTF PUMPS HOUSE
5.1	UNIT #1 – STEAM GENERATOR
5.2	
6	OVERFLOW VESSELS
7.1	UNIT #1 – BFW HEATERS, DA, BFW PUMPS AND BRINE CONCENTRATOR
7.2	
8.1	UNIT #1 – TG AREA
8.2	
9	DCS ROOM
10	CENTRAL E&C AND OPERATIONS BUILDING (OFFICES & MAINT. SHOPS)
11	WATER TREATMENT BUILDING
12.1	UNIT #1 – COOLING TOWER
12.2	
13.1	UNIT #1 – CLOSED LOOP COOLING SYSTEM (CLCS)
13.2	
14	SWITCHYARD
15	WATER/WASTEWATER TREATMENT SYSTEMS
16	FIREWATER/COOLING TOWER MAKE UP TANK
17	RAW WATER TANK
18	FUTURE RAW WATER CLARIFIER/FILTERS
19	CONTROL ROOM
20	LUNCH ROOM
21	WAREHOUSE
22	CONTROL ELECTRICAL POWER ROOM
23	DIESEL GENERATOR
24	DG FUEL OIL STORAGE TANK
25	SUBSTATION RELAY HOUSE
26	CT ELECTRICAL BUILDING
27	HTF ELECTRICAL ROOM
28	13.8KV DUCT BANK–TIE BETWEEN ALPHA & BETA SITE
29	AUXILIARY BOILER
30	COOLING TOWER BLOWDOWN TANK
31	R.O. WATER TANK
32	R.O. REJECT WATER TANK
33	POLISHED WATER TANK
34	NITROGEN UNIT
35	OILY WATER SUMP & OIL/WATER SEPARATOR

PRELIMINARY

0FT 50FT 100FT 150FT 200FT 250FT
DISTANCE IN FEET

Figure C.2-2

ABENCS
Abener Engineering and Construction Services, LLC
ST. LOUIS, MISSOURI

ABENGOA SOLAR

ABENER DRAWING NUMBER

CENTRAL PLANT LAYOUT
FOR ALPHA (WET COOL) PLANT
HARPER LAKE, CA

	BY	DATE	APP'D.	DATE	JOB NO.	REVISION
DRAWN	TLF				120010	
CHECKED					DRAWING NO. MD-L103	
SCALE	1"=100'-0"					

REVISIONS

NO.	DATE	DESCRIPTION	BY	BY	BY

REFERENCES

DESCRIPTION

THIS DRAWING IS THE PROPERTY OF ABENCS Abener Engineering and Construction Services, LLC. INFORMATION AND KNOW-HOW HEREON ARE CONFIDENTIAL AND PROPRIETARY AND MAY NOT BE USED, REPRODUCED, OR REVEALED TO OTHERS EXCEPT IN ACCORDANCE WITH THE TERMS OF A CONTRACT WITH OR OTHER WRITTEN PERMISSION OF Abener Engineering and Construction Services, LLC. ANY REPRODUCTIONS IN WHOLE OR PART INCLUDING THIS DRAWING SHALL CONTAIN THIS STAMP.

ISSUE DATE | PURPOSE OF ISSUE: FOR REVIEW

Plot Date/Time/User: 29-Apr-09/11:23 AM/FREDERICK REDELL

Z:\PROJECTS\ABENGOA\MOJAVE SOLAR ONE\TECHNICAL\LAYOUT (0-1,0-2,0-3)\MDL103_ALPHA_WETCOOL_031109.DWG

Figure C.2-3

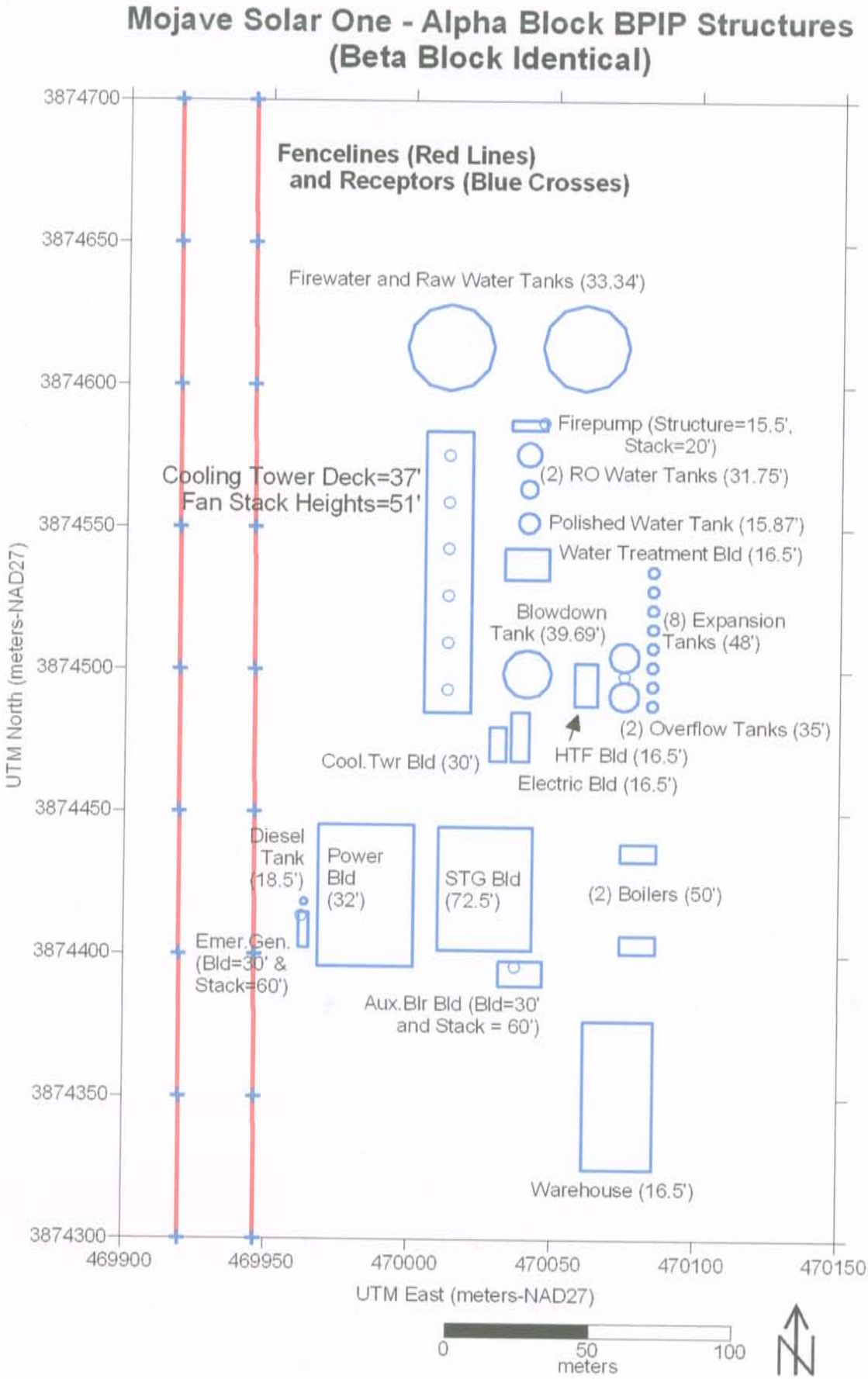
Mojave Solar One - Alpha Block BPIP Structures
(Beta Block Identical)
Fencelines (Red Lines)
and Receptors (Blue Crosses)
Firewater and Raw Water Tanks (33.34')
Firepump (Structure=15.5', Stack=20')
(2) RO Water Tanks (31.75')
Polished Water Tank (15.87')
Water Treatment Bld (16.5')
Cooling Tower Deck=37'
Fan Stack Heights=51'
Blowdown Tank (39.69')
(8) Expansion Tanks (48')
(2) Overflow Tanks (35')
Cool.Twr Bld (30')
HTF Bld (16.5')
Electric Bld (16.5')
Diesel Tank (18.5')
Power Bld (32')
STG Bld (72.5')
(2) Boilers (50')
Emer.Gen. (Bld=30' & Stack=60')
Aux.Blr Bld (Bld=30' and Stack = 60')
Warehouse (16.5')
3874700
3874650
3874600
3874550
3874500
3874450
3874400
3874350
3874300
UTM North (meters-NAD27)
469900
469950
470000
470050
470100
470150
UTM East (meters-NAD27)
0
50
100
meters
N

Figure C.2-4a

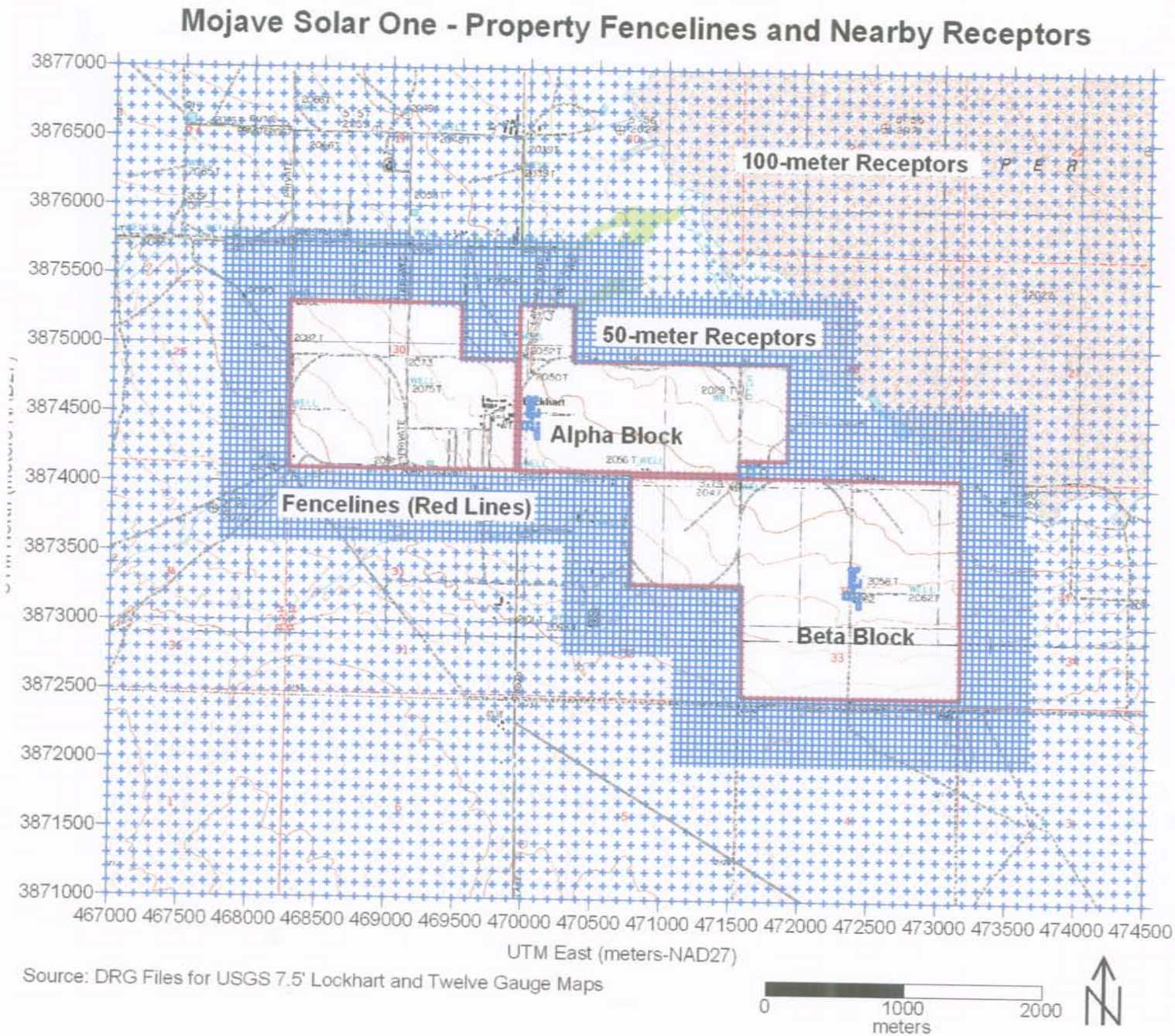
Mojave Solar One - Property Fencelines and Nearby Receptors
100-meter Receptors
50-meter Receptors
Alpha Block
Fencelines (Red Lines)
Beta Block
3877000
3876500
3876000
3875500
3875000
3874500
3874000
3873500
3873000
3872500
3872000
3871500
3871000
467000 467500 468000 468500 469000 469500 470000 470500 471000 471500 472000 472500 473000 473500 474000 474500
UTM East (meters-NAD27)
Source: DRG Files for USGS 7.5' Lockhart and Twelve Gauge Maps
0
1000
2000
meters
N

Figure C.2-4b

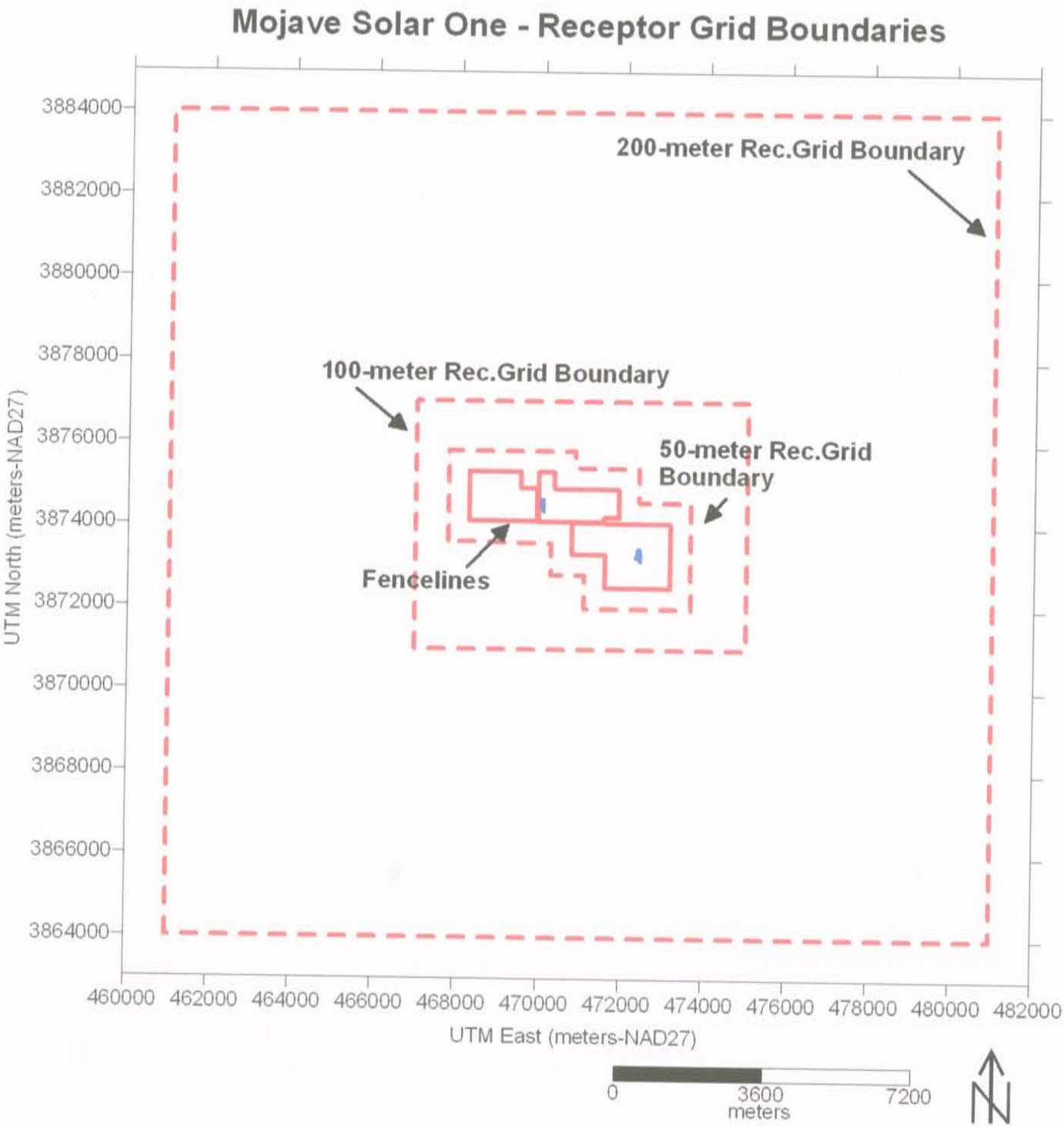
Mojave Solar One - Receptor Grid Boundaries
200-meter Rec.Grid Boundary
100-meter Rec.Grid Boundary
50-meter Rec.Grid Boundary
Fencelines
UTM North (meters-NAD27)
3884000
3882000
3880000
3878000
3876000
3874000
3872000
3870000
3868000
3866000
3864000
460000
462000
464000
466000
468000
470000
472000
474000
476000
478000
480000
482000
UTM East (meters-NAD27)
0
3600
7200
meters
N

Figure C.2-5

Mojave Desert Air Basin Monitoring Stations (2006-2008)

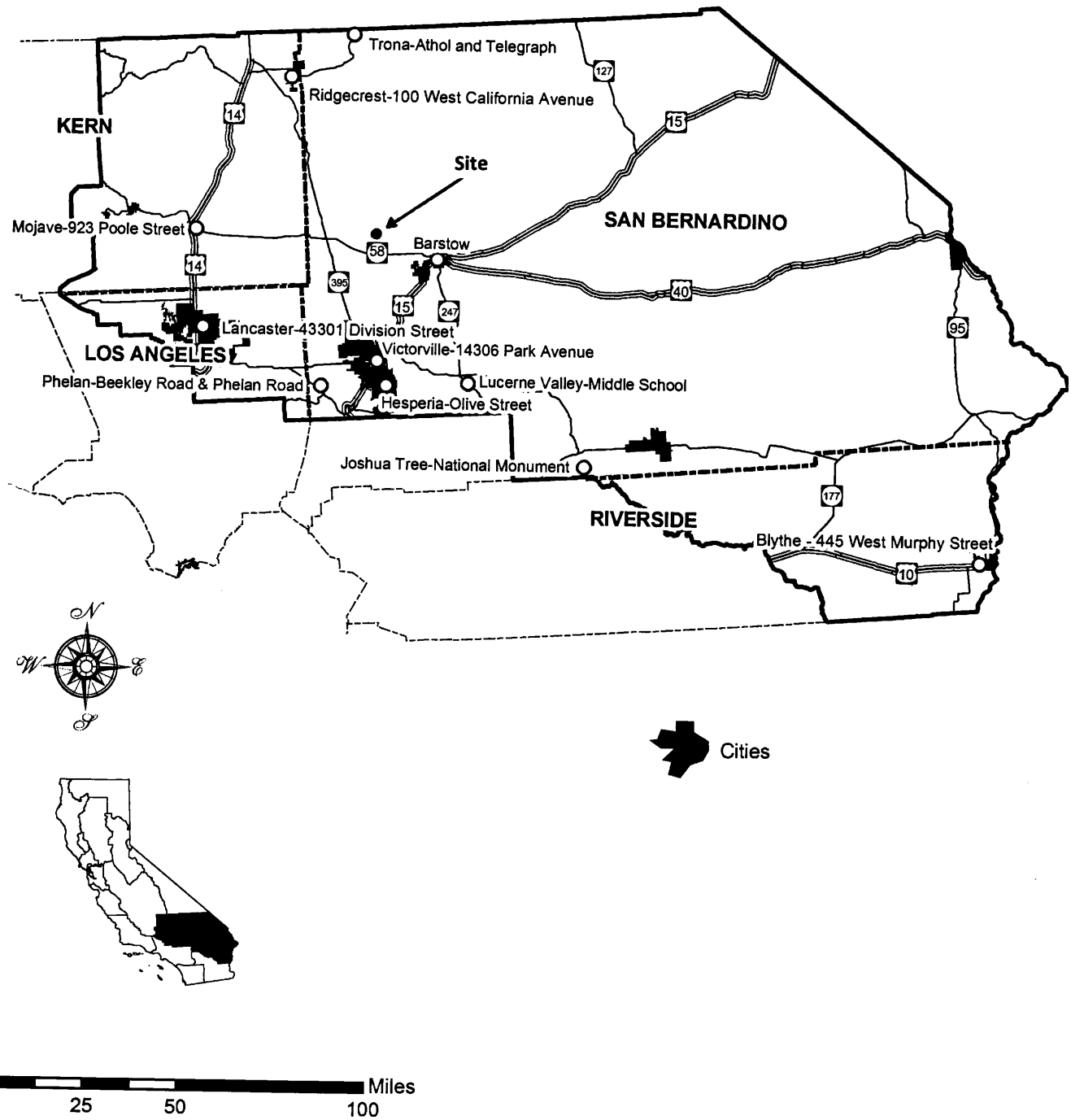

APPENDIX C.3

Protocol for Increments Analysis

Overview of Requirements for Increments Analysis

The federal Prevention of Significant Deterioration (PSD) program is intended to ensure that economic growth in areas with good air quality occurs without causing the deterioration of that air quality to unhealthful levels. The PSD program contains a number of requirements that apply to new or modified sources of air pollution that are located in clean air areas.

These PSD program requirements, applied on a pollutant-specific basis, include conducting an increments analysis to demonstrate that no increments will be exceeded as a result of the proposed new or modified source.

The MS1 project is **not** expected to trigger the requirements of the PSD program. Therefore, no increment analysis is proposed at this time.

Should a determination be made in the future that the PSD regulations apply, or emissions levels are such that PSD becomes applicable, a protocol will be submitted which will outline the required review, analyses, and methodologies to be used.

Appendix C.4

Health Risk Assessment Support Data

Health Risk Assessment Process, Goals, Assumptions, and Uses

"In recent years, the public has become increasingly aware of the presence of harmful chemicals in our environment. Many people express concerns about pesticides and other foreign substances in food, contaminants in drinking water, and toxic pollutants in the air. Others believe these concerns are exaggerated or unwarranted. How can we determine which of these potential hazards really deserve attention? How do we, as a society, decide where to focus our efforts and resources to control these hazards? When we hear about toxic threats that affect us personally, such as the discovery of industrial waste buried in our neighborhood or near our children's school, how concerned should we be?

Health risk assessment is a scientific tool designed to help answer these questions. Government agencies rely on risk assessments to help them determine which potential hazards are the most significant. Risk assessments can also guide regulators in abating environmental hazards. Members of the public who learn the basics of risk assessment can improve their understanding of both real and perceived environmental hazards, and they can work more effectively with decision makers on solutions to environmental problems.

Chemicals can be either beneficial or harmful, depending on a number of factors, such as the amounts to which we are exposed. Low levels of some substances may be necessary for good health, but higher levels may be harmful. Health risk assessments are used to determine if a particular chemical poses a significant risk to human health and, if so, under what circumstances. Could exposure to a specific chemical cause significant health problems? How much of the chemical would someone have to be exposed to before it would be dangerous? How serious could the health risks be? What activities might put people at increased risk?

If it were possible to prevent all human exposure to all hazardous chemicals, there would be no need for risk assessment. However, the total removal of harmful pollutants from the environment is often infeasible or impossible, and many naturally occurring substances also pose health risks. Risk assessment helps scientists and regulators identify serious health hazards and determine realistic goals for reducing exposure to toxics so that there is no significant health threat to the public.

Estimating the hazards posed by toxic chemicals in the environment involves the compilation and evaluation of complex sets of data. Government regulators, therefore, turn to specialists to perform or assist with risk assessments. These specialists include scientists with degrees in toxicology (the study of the toxic effects of chemicals) and epidemiology (the study of disease or illness in populations) as well as physicians, biologists, chemists, and engineers.

The term "health risk assessment" is often misinterpreted. People sometimes think that a risk assessment will tell them whether a current health problem or symptom was caused by exposure

to a chemical. This is not the case. Scientists who are searching for links between chemical exposures and health problems in a community may conduct an epidemiologic study. These studies typically include a survey of health problems in a community and a comparison of health problems in that community with those in other cities, communities, or the population as a whole.

Although they are both important, health risk assessments and epidemiologic studies have different objectives. Most epidemiologic studies evaluate whether *past* chemical exposures may be responsible for documented health problems in a specific group of people. In contrast, health risk assessments are used to estimate whether current or future chemical exposures will pose health risks to a broad population, such as a city or a community. Scientific methods used in health risk assessment cannot be used to link individual illnesses to past chemical exposures, nor can health risk assessments and epidemiologic studies prove that a specific toxic substance caused an individual's illness.

The U.S. Environmental Protection Agency (U.S. EPA) is a leading risk assessment agency at the federal level. In California, the Office of Environmental Health Hazard Assessment (OEHHA) in the California Environmental Protection Agency (Cal/EPA) has the primary responsibility for developing procedures and practices for performing health risk assessments. Other agencies within Cal/EPA, such as the Department of Pesticide Regulation and the Department of Toxic Substances Control, have extensive risk assessment programs of their own but work closely with OEHHA.

The Department of Pesticide Regulation uses risk assessments to make regulatory decisions concerning safe pesticide uses. The Department of Toxic Substances Control uses risk assessments to determine requirements for the management and cleanup of hazardous wastes. OEHHA's health risk assessments are used by the Air Resources Board to develop regulations governing toxic air contaminants, and by the Department of Health Services to develop California's drinking water standards. These agencies' decisions take into account the seriousness of potential health effects along with the economic and technical feasibility of measures that can reduce the health risks.

Health risk assessment requires both sound science and professional judgment and is a constantly developing process. Cal/EPA is nationally recognized for developing new procedures that improve the accuracy of risk assessments. Cal/EPA also works closely with U.S. EPA in all phases of risk assessment.

The risk assessment process is typically described as consisting of four basic steps: hazard identification, exposure assessment, dose-response assessment, and risk characterization. Each of these steps will be explained in the following text.

Hazard Identification

In the first step, hazard identification, scientists determine the types of health problems a chemical could cause by reviewing studies of its effects in humans and laboratory animals. Depending on the chemical, these health effects may include short-term ailments, such as headaches; nausea; and eye, nose, and throat irritation; or chronic diseases, such as cancer. Effects on sensitive populations, such as pregnant women and their developing fetuses, the elderly, or those with health problems

(including those with weakened immune systems), must also be considered. Responses to toxic chemicals will vary depending on the amount and length of exposure. For example, short-term exposure to low concentrations of chemicals may produce no noticeable effect, but continued exposure to the same levels of chemicals over a long period of time may eventually cause harm. An important step in hazard identification is the selection of key research studies that can provide accurate, timely information on the hazards posed to humans by a particular chemical. The selection of a study is based upon factors such as whether the study has been peer reviewed by qualified scientists, whether the study's findings have been verified by other studies, and the species tested (human studies provide the best evidence). Some studies may involve humans that have been exposed to the chemical, while others may involve studies with laboratory animals.

Human data frequently are useful in evaluating human health risks associated with chemical exposures. Human epidemiologic studies typically examine the effects of chemical exposure on a large number of people, such as employees exposed to varying concentrations of chemicals in the workplace. In many cases, these exposures took place prior to the introduction of modern worker-safety measures.

One weakness of occupational studies is that they generally measure the effects of chemicals on healthy workers and do not consider children, the elderly, those with pre-existing medical conditions, or other sensitive groups. Since occupational studies are not controlled experiments, there may be uncertainties about the amount and duration of exposure or the influence of lifestyle choices, such as smoking or alcohol use, on the health of workers in the studies. Exposure of workers to other chemicals at the same time may also influence and complicate the results.

Laboratory studies using human volunteers are better able to gauge some health effects because chemical exposures can then be measured with precision. But these studies usually involve small numbers of people and, in conformance with ethical and legal requirements, use only adults who agree to participate in the studies. Moreover, laboratory studies often use simple measurements that identify immediate responses to the chemical but might miss significant, longer-term health effects. Scientists can also use physicians' case reports of an industrial or transportation accident in which individuals were unintentionally exposed to a chemical. However, these reports may involve very small numbers of people, and the level of exposure to the chemical could be greater than exposures to the same chemical in the environment. Nevertheless, human studies are preferred for risk assessment, so OEHHA makes every effort to use them when they are available.

Because the effects of the vast majority of chemicals have not been studied in humans, scientists must often rely on animal studies to evaluate a chemical's health effects. Animal studies have the advantage of being performed under controlled laboratory conditions that reduce much of the uncertainty related to human studies. If animal studies are used, scientists must determine whether a chemical's health effects in humans are likely to be similar to those in the animals tested. Although effects seen in animals can also occur in humans, there may be subtle or even significant differences in the ways humans and experimental animals react to a chemical. Comparison of human and animal metabolism may be useful in selecting the animal species that should be studied, but it is often not possible to determine which species is most like humans in its response to a chemical exposure. However, if similar effects were found in more than one species, the results would strengthen the evidence that humans may also be at risk.

Exposure Assessment

In exposure assessment, scientists attempt to determine how long people were exposed to a chemical; how much of the chemical they were exposed to; whether the exposure was continuous or intermittent; and how people were exposed—through eating, drinking water and other liquids, breathing, or skin contact. All of this information is combined with factors such as breathing rates, water consumption, and daily activity patterns to estimate how much of the chemical was taken into the bodies of those exposed.

People can be exposed to toxic chemicals in various ways. These substances can be present in the air we breathe, the food we eat, or the water we drink. Some chemicals, due to their particular characteristics, may be both inhaled and ingested. For example, airborne chemicals can settle on the surface of water, soil, leaves, fruits, vegetables, and forage crops used as animal feed. Cows, chickens, or other livestock can become contaminated when eating, drinking, or breathing the chemicals present in the air, water, feed, and soil. Fish can absorb the chemicals as they swim in contaminated water or ingest contaminated food. Chemicals can be absorbed through the skin, so infants and children can be exposed simply by crawling or playing in contaminated dirt. They can also ingest chemicals if they put their fingers or toys in their mouths after playing in contaminated dirt. Chemicals can also be passed on from nursing mothers to their children through breast milk.

To estimate exposure levels, scientists rely on air, water, and soil monitoring; human blood and urine samples; or computer modeling. Although monitoring of a pollutant provides excellent data, it is time consuming, costly, and typically limited to only a few locations. For those reasons, scientists often rely on computer modeling, which uses mathematical equations to describe how a chemical is released and to estimate the speed and direction of its movement through the surrounding environment. Modeling has the advantage of being relatively inexpensive and less time consuming, provided all necessary information is available and the accuracy of the model can be verified through testing.

Computer modeling is often used to assess chemical releases from industrial facilities. Such models require information on the type of chemicals released, facilities' hours of operation, industrial processes that release the chemicals, smokestack height and temperature, any pollution-control equipment that is used, surrounding land type (urban or rural), local topography and meteorology, and census data regarding the exposed population.

In all health risk assessments, scientists must make assumptions in order to estimate human exposure to a chemical. For example, scientists assessing the effects of air pollution may need to make assumptions about the time people spend outdoors, where they are more directly exposed to pollutants in the ambient air, or the time they spend in an area where the pollution is greatest. An assessment of soil contamination may require scientists to make assumptions about people's consumption of fruits and vegetables that may absorb soil contaminants.

To avoid underestimating actual human exposure to a chemical, scientists often look at the range of possible exposures. For example, people who jog in the afternoon, when urban air pollution levels are highest, would have much higher exposures to air pollutants than people who come home after work and relax indoors. Basing an exposure estimate on a value near the higher end of

a range of exposure levels (closer to the levels experienced by the jogger than by the person remaining indoors) provides a realistic worst-case estimate of exposure. These kinds of conservative assumptions, which presume that people are exposed to the highest amounts of a chemical that can be considered credible, are referred to as "health-protective" assumptions.

Dose-Response Assessment

In dose-response assessment, scientists evaluate the information obtained during the hazard identification step to estimate the amount of a chemical that is likely to result in a particular health effect in humans.

An established principle in toxicology is that "the dose makes the poison." For example, a commonplace chemical like table salt is harmless in small quantities, but it can cause illness in large doses. Similarly, hydrochloric acid, a hazardous chemical, is produced naturally in our stomachs but can be quite harmful if taken in large doses.

Scientists perform a dose-response assessment to estimate how different levels of exposure to a chemical can impact the likelihood and severity of health effects. The dose-response relationship is often different for many chemicals that cause cancer than it is for those that cause other kinds of health problems.

Cancer Effects

For chemicals that cause cancer, the general assumption in risk assessment has been that there are no exposures that have "zero risk" unless there is clear evidence otherwise. In other words, even a very low exposure to a cancer-causing chemical may result in cancer if the chemical happens to alter cellular functions in a way that causes cancer to develop. Thus, even very low exposures to carcinogens might increase the risk of cancer, if only by a very small amount.

Several factors make it difficult to estimate the risk of cancer. Cancer appears to be a progressive disease because a series of cellular transformations is thought to occur before cancer develops. In addition, cancer in humans often develops many years after exposure to a chemical. Also, the best information available on the ability of chemicals to cause cancer often comes from studies in which a limited number of laboratory animals are exposed to levels of chemicals that are much higher than the levels humans would normally be exposed to in the environment. As a result, scientists use mathematical models based on studies of animals exposed to high levels of a chemical to estimate the probability of cancer developing in a diverse population of humans exposed to much lower levels. The uncertainty in these estimates may be rather large. To reduce these uncertainties, risk assessors must stay informed of new scientific research. Data from new studies can be used to improve estimates of cancer risks.

Non-cancer Effects

Non-cancer health effects (such as asthma, nervous system disorders, birth defects, and developmental problems in children) typically become more severe as exposure to a chemical increases. One goal of dose-response assessment is to estimate levels of exposure that pose only a low or negligible risk for non-cancer health effects. Scientists analyze studies of the health effects of a chemical to develop this estimate. They take into account such factors as the quality of the scientific studies, whether humans or laboratory animals were studied, and the degree to which some people may be more sensitive to the chemical than others. The estimated level of exposure

that poses no significant health risks can be reduced to reflect these factors.

Risk Characterization

The last step in risk assessment brings together the information developed in the previous three steps to estimate the risk of health effects in an exposed population. In the risk characterization step, scientists analyze the information developed during the exposure and dose-response assessments to describe the resulting health risks that are expected to occur in the exposed population. This information is presented in different ways for cancer and non-cancer health effects, as explained below.

Cancer Risk

Cancer risk is often expressed as the maximum number of new cases of cancer projected to occur in a population of one million people due to exposure to the cancer-causing substance over a 70-year lifetime. For example, a cancer risk of one in one million means that in a population of one million people, not more than one additional person would be expected to develop cancer as the result of the exposure to the substance causing that risk.

An individual's actual risk of contracting cancer from exposure to a chemical is often less than the theoretical risk to the entire population calculated in the risk assessment. For example, the risk estimate for a drinking-water contaminant may be based on the health-protective assumption that the individual drinks two liters of water from a contaminated source daily over a 70-year lifetime. However, an individual's actual exposure to that contaminant would likely be lower due to a shorter time of residence in the area. Moreover, an individual's risk not only depends on the individual's exposure to a specific chemical but also on his or her genetic background (i.e., a family history of certain types of cancer); health; diet; and lifestyle choices, such as smoking or alcohol consumption.

Cancer risks presented in risk assessments are often compared to the overall risk of cancer in the general U.S. population (about 250,000 cases for every one million people) or to the risk posed by all harmful chemicals in a particular medium, such as the air. The cancer risk from breathing current levels of pollutants in California's ambient air over a 70-year lifetime is estimated to be 760 in one million.

Non-cancer Risk

Non-cancer risk is usually determined by comparing the actual level of exposure to a chemical to the level of exposure that is not expected to cause any adverse effects, even in the most susceptible people. Levels of exposure at which no adverse health effects are expected are called "health reference levels," and they generally are based on the results of animal studies. However, scientists usually set health reference levels much lower than the levels of exposure that were found to have no adverse effects in the animals tested. This approach helps to ensure that real health risks are not underestimated by adjusting for possible differences in a chemical's effects on laboratory animals and humans; the possibility that some humans, such as children and the elderly, may be particularly sensitive to a chemical; and possible deficiencies in data from the animal studies.

Depending on the amount of uncertainty in the data, scientists may set a health reference level 100 to 10,000 times lower than the levels of exposure observed to have no adverse effects in

animal studies. Exposures above the health reference level are not necessarily hazardous, but the risk of toxic effects increases as the dose increases. If an assessment determines that human exposure to a chemical exceeds the health reference level, further investigation is warranted.

Risk managers rely on risk assessments when making regulatory decisions, such as setting drinking water standards, or developing plans to clean up hazardous waste sites. Risk managers are responsible for protecting human health, but they must also consider public acceptance, as well as technological, economic, social, and political factors, when arriving at their decisions. For example, they may need to consider how much it would cost to remove a contaminant from drinking water supplies or how seriously the loss of jobs would affect a community if a factory were to close due to the challenge of meeting regulatory requirements that are set at the most stringent level.

Health risk assessments can help risk managers weigh the benefits and costs of various alternatives for reducing exposure to chemicals. For example, a health risk assessment of a hazardous waste site could help determine whether placing a clay cap over the waste to prevent exposure would offer the same health protection as the more costly option of removing the waste from the site.

One of the most difficult questions of risk management is: How much risk is acceptable? While it would be ideal to completely eliminate all exposure to hazardous chemicals, it is usually not possible or feasible to remove all traces of a chemical once it has been released into the environment. The goal of most regulators is to reduce the health risks associated with exposure to hazardous pollutants to a negligibly low level.

Regulators generally presume that a one-in-one million risk of cancer from life-long exposure to a hazardous chemical is an "acceptable risk" level because the risk is extremely low compared to the overall cancer rate. If a drinking water standard for a cancer-causing chemical were set at the level posing a "one-in-one million" risk, it would mean that not more than one additional cancer case (beyond what would normally occur in the population) would potentially occur in a population of one million people drinking water meeting that standard over a 70-year lifetime.

Actual regulatory standards for chemicals or hazardous waste cleanups may be set at less stringent risk levels, such as one in 100,000 (not more than one additional cancer case per 100,000 people) or one in 10,000 (not more than one additional cancer case per 10,000 people). These less stringent risk levels are often due to economic or technological considerations. Regulatory agencies generally view these higher risk levels to be acceptable if there is no feasible way to reduce the risks further."[1]

The exposure and dose-response estimates for the project analysis were conducted using HARP (Version 1.4a).

[1] A Guide to Health Risk Assessment, CalEPA-Office of Environmental Health Hazard Assessment, 1001 I Street, Sacramento, Ca. 95812, (est. 2001).

The following tables summarize the results of the HRA performed by the proposed MS1 facility.

TABLE C.4-1 CRITERIA AND AIR TOXIC POLLUTANTS EMITTED FROM MS1 FACILITY	
NOx	Diesel Particulate Matter
CO	Metals (Cooling Tower)
VOC*	Acetaldehyde
SOx	Acrolein
PM10/PM2.5	Benzene
1-3 Butadiene	Ethylbenzene
Formaldehyde	Hexane
PAHs	Naphthalene
Propylene	Propylene Oxide
Toluene	Xylenes

TABLE C.4-2 HEALTH EFFECTS SIGNIFICANT THRESHOLD LEVELS		
	Significance Thresholds	
Agency	**MDAQMD**	**State of California**
Cancer Risk per million	Moderate Risk >1 x 10^{-6} Significant Risk >=100 X 10^{-6} HI >= 10 Significant Health Risk >=10 x 10^{-6} HI >= 1	<= 1.0 without T-BACT <= 10.0 with T-BACT
Acute HI		1.0
Chronic HI		1.0
Cancer Burden		1.0

No specific health related studies were identified which pertain to the local project area for any identified toxic air pollutant or identified specific population.

The other assumptions used in running the HARP program were as follows:

- Emission rates for non-criteria pollutants are taken from AFC Section 5.2, and from Appendix C.1.
- Number of residents affected is based upon the updated 2000 population data for those census tracts or portions of census tracts which lie within the maximum impact receptor radius of the proposed facility.
- All receptors were treated as residential receptors, which allows for the assumption that the MIR, if assumed residential, will represent the highest risk and no other receptor will show risks higher than the MIR. This deletes the need for running worker risks. The HARP risk run options as recommended by South Coast AQMD (Chico, 10-20-05) were utilized (i.e., for cancer – 70-year and derived adjusted method; for chronic – 70-year and derived OEHHA method; for acute – no options).
- Deposition velocity is taken to be 0.02 m/s, as recommended by ARB for controlled emission sources.
- Fraction of residents with gardens is taken to be 0.15 which is likely conservatively high for the rural (desert) area near the project site.
- Fraction of produce grown at home is taken to be 0.15, which is also likely to be conservatively high for the rural (desert) area near the project site.

The HARP program is a tool that assists with the programmatic requirements of the Air Toxics Hot Spots Program, and it can be used for preparing health risk assessments for other related programs such as air toxic control measure development or facility permitting applications. HARP is a computer based risk assessment program which combines the tools of emission inventory database, facility prioritization, air dispersion modeling, and risk assessment analysis. Use of HARP promotes statewide consistency in the area of risk assessment, increases the efficiency of evaluating potential health impacts, and provides a cost effective tool for developing facility health risk assessments. HARP may be used on single sources, facilities with multiple sources, or multiple facilities in close proximity to each other. The receptor grid used in HARP was the same as the grid used in the air quality impact analysis (AERMOD). The AERMOD files used in the HARP analysis were processed via the HARP On-Ramp program.

The HARP program results for acute and chronic inhalation and chronic non-inhalation exposures, cancer burden and individual cancer risk (workplace and residential) for the proposed sources are included in this Appendix.

The modeling results show that the maximum modeled cancer risk (MIR) from MS1 is expected to be $2.59xE^{-7}$. This risk is well below the ten in one million level (with T-BACT), and the MDAQMD significance value. The chronic and acute non-cancer hazard indices are 0.00208 and 0.0101, respectively (at the cancer MIR location). Both are well below the significant impact level of 1.0. The MIR was located offsite approximately 453 feet from the site grid center. At this radius there are no impacted populations, therefore the total cancer burden was calculated to be 0.0, which is also well below the state threshold value of 1.0, as well as being below the MDAQMD Rule 1320 significance level of 0.5. Detailed calculations and results for each significant receptor are included in the modeling results, which are being submitted electronically.

TABLE C.4-3 HEALTH RISK ASSESSMENT SUMMARY (MIR)

Stationary Sources Only		
Risk Category	**Facility Values**	**Applicable Significance Threshold**
Cancer Risk	2.59 E-7	<= 10.0 E-6
Chronic Hazard Index	0.00208	1.0
Acute Hazard Index	0.0101	1.0
Cancer Burden	0	0.5

Facility MIR location coordinates are: Cancer risk and chronic MIR – 469945mE, 3874500mN
Acute MIR location coordinates are: Acute MIR – 469945mE, 3874500mN

The calculated health effects as summarized above do not exceed the district significance threshold values, therefore the health effects would be considered "not significant" and may even be "zero". These HRA results are also provided on the air modeling CD. Due to length of the results output files, hard copies are not included in this appendix.

The following tables and figures are presented at the end of this appendix:

- Table C.4-4 Sensitive Receptor Listing for the Primary Impact Area
- Table C.4-5 OEHHA/CARB Risk Assessment Health Values
- Table C.4-6 Census Tract Numbers, and Population Data
- Table C.4-7 3 Highest MIR Locations and Risk Values
- Figure C.4-1 Census Tracts in the Site Area
- Figure C.4-2 6-Mile Radius Zone Map
- Figure C.4-3 3 Highest Cancer MIR Locations

Risk Assessment input and output files are included on the modeling CD.

Table C.4-4 Identified Sensitive Receptors and Distances from Site
Harper Lake Solar Generating Station

Receptor ID	*Google Earth Data* UTM Em	UTM Nm	Elev., ft.	Dist. From Site, m.	Dist. From Site, ft.	Receptor #	**NAD27 UTM Em**	**UTM Nm**	**Elev, ft.**
Site	**470569**	**3874265**	2062	na	na		470696	3874280	2013
Kramer Junction	450560	3872148	2522	20120.7	66016.0	1	450687	3872163	2473
worker	468349	3876627	2068	3241.5	10635.4	2	468476	3876642	2019
worker	450580	3872334	2491	20082.1	65889.2	3	450707	3872349	2442
res	450971	3872223	2478	19704.1	64649.1	4	451098	3872238	2429
worker	449883	3874649	2471	20689.6	67882.5	5	450010	3874664	2422
res	447224	3881891	2848	24559.0	80578.1	6	447351	3881906	2799
res-Boron	442195	3873904	2469	28376.3	93102.6	7	442322	3873919	2420
sch	436634	3873603	2411	33941.5	111361.9	8	436761	3873618	2362
pre-sch	436622	3873505	2413	33955.5	111408.0	9	436749	3873520	2364
worker	436184	3877180	2414	34508.3	113221.9	10	436311	3877195	2365
res-Hinkley	481797	3865786	2165	14069.9	46163.3	11	481924	3865801	2116
sch-Barstow	490882	3861107	2188	24202.3	79407.7	12	491009	3861122	2139
hosp-Barstow	498280	3861300	2255	30594.0	100378.8	13	498407	3861315	2206
unk (res-farm)	470768	3874297	2062	201.6	661.3	14	470895	3874312	2013
unk (res-farm)	469724	3874694	2067	947.7	3109.3	15	469851	3874709	2018
unk (res-farm)	468687	3875860	2070	2467.0	8094.1	16	468814	3875875	2021
unk (res-farm)	470358	3873999	2072	339.5	1114.0	17	470485	3874014	2023
unk (res-farm)	469629	3874082	2079	957.6	3142.0	18	469756	3874097	2030
unk (res-farm)	469823	3873849	2077	854.1	2802.5	19	469950	3873864	2028
unk (res-farm)	469753	3872435	2129	2003.7	6574.1	20	469880	3872450	2080
unk (res-farm)	469693	3872161	2140	2279.1	7477.7	21	469820	3872176	2091
unk (res-farm)	471622	3874305	2047	1053.8	3457.4	22	471749	3874320	1998

Table C.4-5

OEHHA/CARB Consolidated Risk Value Summary Table

(14 pages total)

Table 1
CONSOLIDATED TABLE OF OEHHA/ARB APPROVED RISK ASSESSMENT HEALTH VALUES[e]

Substance	Chemical Abstract Number[▼]	Noncancer Effects								Cancer Risk					
		Acute Inhalation ($\mu g/m^3$)	Date[◆] Value Reviewed [Added]	8-Hour Inhalation ($\mu g/m^3$)	Date[◆] Value Reviewed [Added]	Chronic Inhalation ($\mu g/m^3$)	Date[◆] Value Reviewed [Added]	Chronic Oral (mg/kg-d)	Date[◆] Value Reviewed [Added]	Inhalation Unit Risk[*] $(\mu g/m^3)^{-1}$	Inhalation Cancer Potency Factor[*] $(mg/kg\text{-}d)^{-1}$	Date[◆] Value Reviewed [Added]	Oral Slope Factor $(mg/kg\text{-}d)^{-1}$	Date[◆] Value Reviewed [Added]	MWAF[♣]
ACETALDEHYDE	75-07-0	4.7E+02	12/08	3.0E+02	12/08	1.4E+02	12/08			2.7E-06	1.0E-02	4/99 [5/93]			1
ACETAMIDE	60-35-5									2.0E-05	7.0E-02	4/99			1
ACROLEIN	107-02-8	2.5E+00	12/08	7.0E-01	12/08	3.5E-01	12/08								1
ACRYLAMIDE	79-06-1									1.3E-03	4.5E+00	4/99 [7/90]			1
ACRYLIC ACID	79-10-7	6.0E+03	4/99												1
ACRYLONITRILE	107-13-1					5.0E+00	12/01			2.9E-04	1.0E+00	4/99 [1/91]			1
ALLYL CHLORIDE	107-05-1									6.0E-06	2.1E-02	4/99			1
2-AMINOANTHRAQUINONE	117-79-3									9.4E-06	3.3E-02	4/99			1
AMMONIA	7664-41-7	3.2E+03	4/99			2.0E+02	2/00								1
ANILINE	62-53-3									1.6E-06	5.7E-03	4/99			1
ARSENIC AND COMPOUNDS (INORGANIC) TAC	7440-38-2 1016 [1015]	2.0E-01	12/08	1.5E-02	12/08	1.5E-02	12/08	3.5E-06	12/08	3.3E-03 TAC	1.2E+01	7/90	1.5E+00	10/00	1
ARSINE	7784-42-1	2.0E-01	12/08	1.5E-02	12/08	1.5E-02	12/08								1
ASBESTOS TAC ¤	1332-21-4									1.9E-04 TAC ¤	2.2E+02	3/86			333.33
BENZENE TAC	71-43-2	1.3E+03	4/99			6.0E+01	2/00			2.9E-05 TAC	1.0E-01	1/85			1
BENZIDINE (AND ITS SALTS) *values also apply to:*	92-87-5									1.4E-01	5.0E+02	4/99 [1/91]			1
Benzidine based dyes	*1020*									*1.4E-01*	*5.0E+02*	*4/99 [1/91]*			*1*
Direct Black 38	*1937-37-7*									*1.4E-01*	*5.0E+02*	*4/99 [1/91]*			*1*
Direct Blue 6	*2602-46-2*									*1.4E-01*	*5.0E+02*	*4/99 [1/91]*			*1*
Direct Brown 95 (technical grade)	*16071-86-6*									*1.4E-01*	*5.0E+02*	*4/99 [1/91]*			*1*
BENZYL CHLORIDE	100-44-7	2.4E+02	4/99							4.9E-05	1.7E-01	4/99			1
BERYLLIUM AND COMPOUNDS	7440-41-7 [1021]					7.0E-03	12/01	2.0E-03	12/01	2.4E-03	8.4E+00	4/99 [7/90]			1
BIS(2-CHLOROETHYL)ETHER (Dichloroethyl ether)	111-44-4									7.1E-04	2.5E+00	4/99			1
BIS(CHLOROMETHYL)ETHER	542-88-1									1.3E-02	4.6E+01	4/99 [1/91]			1
BROMINE AND COMPOUNDS	7726-95-6 [1040]														1
POTASSIUM BROMATE	7758-01-2									1.4E-04	4.9E-01	4/99 [10/93]			1

Table last updated: February 9, 2009

Table 1
CONSOLIDATED TABLE OF OEHHA/ARB APPROVED RISK ASSESSMENT HEALTH VALUES°

Substance	Chemical Abstract Number▼	Noncancer Effects								Cancer Risk					
		Acute Inhalation ($\mu g/m^3$)	Date Value Reviewed [Added]◆	8-Hour Inhalation ($\mu g/m^3$)	Date Value Reviewed [Added]◆	Chronic Inhalation ($\mu g/m^3$)	Date Value Reviewed [Added]◆	Chronic Oral (mg/kg-d)	Date Value Reviewed [Added]◆	Inhalation Unit Risk $(\mu g/m^3)^{-1}$*	Inhalation Cancer Potency Factor $(mg/kg\text{-}d)^{-1}$*	Date Value Reviewed [Added]◆	Oral Slope Factor $(mg/kg\text{-}d)^{-1}$	Date Value Reviewed [Added]◆	MWAF♣
1,3-BUTADIENE TAC	106-99-0					2.0E+01	1/01			1.7E-04 TAC	6.0E-01	7/92			1
CADMIUM AND COMPOUNDS TAC	7440-43-9 [1045]					2.0E-02	1/01	5.0E-04	10/00	4.2E-03 TAC	1.5E+01	1/87			1
CARBON DISULFIDE	75-15-0	6.2E+03	4/99			8.0E+02	5/02								1
CARBON MONOXIDE	630-08-0	2.3E+04	4/99												1
CARBON TETRACHLORIDE TAC (Tetrachloromethane)	56-23-5	1.9E+03	4/99			4.0E+01	1/01			4.2E-05 TAC	1.5E-01	9/87			1
CHLORINATED PARAFFINS	108171-26-2									2.5E-05	8.9E-02	4/99			1
CHLORINE	7782-50-5	2.1E+02	4/99			2.0E-01	2/00								1
CHLORINE DIOXIDE	10049-04-4					6.0E-01	1/01								1
4-CHLORO-O-PHENYLENEDIAMINE	95-83-0									4.6E-06	1.6E-02	4/99			1
CHLOROBENZENE	108-90-7					1.0E+03	1/01								1
CHLORODIFLUOROMETHANE ... (see Fluorocarbons)															
CHLOROFORM TAC	67-66-3	1.5E+02	4/99			3.0E+02	4/00			5.3E-06 TAC	1.9E-02	12/90			1
Chlorophenols	*1060*														*1*
PENTACHLOROPHENOL	87-86-5									5.1E-06	1.8E-02	4/99			1
2,4,6-TRICHLOROPHENOL	88-06-2									2.0E-05	7.0E-02	4/99 [1/91]			1
CHLOROPICRIN	76-06-2	2.9E+01	4/99			4.0E-01	12/01								1
p-CHLORO-o-TOLUIDINE	95-69-2									7.7E-05	2.7E-01	4/99			1
CHROMIUM 6+ TAC *values also apply to:*	18540-29-9					2.0E-01	1/01	2.0E-02	10/00	1.5E-01 TAC	5.1E+02	1/86	Ø		1
Barium chromate	*10294-40-3*					*2.0E-01*	*1/01*	*2.0E-02*	*10/00*	*1.5E-01 TAC*	*5.1E+02*	*1/86*	Ø		*0.2053*
Calcium chromate	*13765-19-0*					*2.0E-01*	*1/01*	*2.0E-02*	*10/00*	*1.5E-01 TAC*	*5.1E+02*	*1/86*	Ø		*0.3332*
Lead chromate	*7758-97-6*					*2.0E-01*	*1/01*	*2.0E-02*	*10/00*	*1.5E-01 TAC*	*5.1E+02*	*1/86*	Ø		*0.1609*
Sodium dichromate	*10588-01-9*					*2.0E-01*	*1/01*	*2.0E-02*	*10/00*	*1.5E-01 TAC*	*5.1E+02*	*1/86*	Ø		*0.397*
Strontium chromate	*7789-06-2*					*2.0E-01*	*1/01*	*2.0E-02*	*10/00*	*1.5E-01 TAC*	*5.1E+02*	*1/86*	Ø		*0.2554*
CHROMIUM TRIOXIDE (as chromic acid mist)	1333-82-0					2.0E-03	1/01	2.0E-02	10/00	1.5E-01 TAC	5.1E+02	1/86	Ø		0.52
COPPER AND COMPOUNDS	7440-50-8 [1067]	1.0E+02	4/99												1
p-CRESIDINE	120-71-8									4.3E-05	1.5E-01	4/99			1
CRESOLS (mixtures of)	1319-77-3					6.0E+02	1/01								1
m-CRESOL	108-39-4					6.0E+02	1/01								1

Table last updated: February 9, 2009

Table 1
CONSOLIDATED TABLE OF OEHHA/ARB APPROVED RISK ASSESSMENT HEALTH VALUES°

Substance	Chemical Abstract Number▼	Noncancer Effects								Cancer Risk					
		Acute Inhalation (µg/m³)	Date◆ Value Reviewed [Added]	8-Hour Inhalation (µg/m³)	Date◆ Value Reviewed [Added]	Chronic Inhalation (µg/m³)	Date◆ Value Reviewed [Added]	Chronic Oral (mg/kg-d)	Date◆ Value Reviewed [Added]	Inhalation Unit Risk* (µg/m³)⁻¹	Inhalation Cancer Potency Factor* (mg/kg-d)⁻¹	Date◆ Value Reviewed [Added]	Oral Slope Factor (mg/kg-d)⁻¹	Date◆ Value Reviewed [Added]	MWAF♣
o-CRESOL	95-48-7					6.0E+02	1/01								1
p-CRESOL	106-44-5					6.0E+02	1/01								1
CUPFERRON	135-20-6									6.3E-05	2.2E-01	4/99			1
Cyanide Compounds (inorganic)	*57-12-5 1073*	*3.4E+02*	*4/99*			*9.0E+00*	*4/00*								*1*
HYDROGEN CYANIDE (Hydrocyanic acid)	74-90-8	3.4E+02	4/99			9.0E+00	4/00								1
2,4-DIAMINOANISOLE	615-05-4									6.6E-06	2.3E-02	4/99			1
2,4-DIAMINOTOLUENE	95-80-7									1.1E-03	4.0E+00	4/99			1
1,2-DIBROMO-3-CHLOROPROPANE (DBCP)	96-12-8									2.0E-03	7.0E+00	4/99 [1/92]			1
p-DICHLOROBENZENE	106-46-7					8.0E+02	1/01			1.1E-05	4.0E-02	4/99 [1/91]			1
3,3-DICHLOROBENZIDINE	91-94-1									3.4E-04	1.2E+00	4/99 [1/91]			1
1,1,-DICHLOROETHANE (Ethylidene dichloride)	75-34-3									1.6E-06	5.7E-03	4/99			1
1,1-DICHLOROETHYLENE ... (see Vinylidene Chloride)															
DI(2-ETHYLHEXYL)PHTHALATE (DEHP)	117-81-7									2.4E-06	8.4E-03	4/99 [1/92]	8.4E-03	10/00	1
DIESEL EXHAUST ... (see Particulate Emissions from Diesel-Fueled Engines)															
DIETHANOLAMINE	111-42-2					3.0E+00	12/01								
p-DIMETHYLAMINOAZOBENZENE	60-11-7									1.3E-03	4.6E+00	4/99			1
N,N-DIMETHYL FORMAMIDE	68-12-2					8.0E+01	1/01								1
2,4-DINITROTOLUENE	121-14-2									8.9E-05	3.1E-01	4/99			1
1,4-DIOXANE+ (1,4-Diethylene dioxide)	123-91-1	3.0E+03	4/99			3.0E+03	4/00			7.7E-06	2.7E-02	4/99 [1/91]			1
EPICHLOROHYDRIN (1-Chloro-2,3-epoxypropane)	106-89-8	1.3E+03	4/99			3.0E+00	1/01			2.3E-05	8.0E-02	4/99 [1/92]			1
1,2-EPOXYBUTANE	106-88-7					2.0E+01	1/01								1
ETHYL BENZENE	100-41-4					2.0E+03	2/00			2.5E-06	8.7E-3	11/07			1
ETHYL CHLORIDE (Chloroethane)	75-00-3					3.0E+04	4/00								1
ETHYLENE DIBROMIDE TAC (1,2-Dibromoethane)	106-93-4					8.0E-01	12/01			7.1E-05 TAC	2.5E-01	7/85			1
ETHYLENE DICHLORIDE TAC (1,2-Dichloroethane)	107-06-2					4.0E+02	1/01			2.1E-05 TAC	7.2E-02	9/85			1
ETHYLENE GLYCOL	107-21-1					4.0E+02	4/00								1
ETHYLENE GLYCOL BUTYL ETHER ... (see Glycol ethers)															

Table last updated: February 9, 2009

Table 1
CONSOLIDATED TABLE OF OEHHA/ARB APPROVED RISK ASSESSMENT HEALTH VALUES°

Substance	Chemical Abstract Number	Noncancer Effects								Cancer Risk					
		Acute Inhalation (µg/m³)	Date Value Reviewed [Added]	8-Hour Inhalation (µg/m³)	Date Value Reviewed [Added]	Chronic Inhalation (µg/m³)	Date Value Reviewed [Added]	Chronic Oral (mg/kg-d)	Date Value Reviewed [Added]	Inhalation Unit Risk (µg/m³)⁻¹	Inhalation Cancer Potency Factor (mg/kg-d)⁻¹	Date Value Reviewed [Added]	Oral Slope Factor (mg/kg-d)⁻¹	Date Value Reviewed [Added]	MWAF
ETHYLENE OXIDE TAC (1,2-Epoxyethane)	75-21-8					3.0E+01	1/01			8.8E-05 TAC	3.1E-01	11/87			1
ETHYLENE THIOUREA	96-45-7									1.3E-05	4.5E-02	4/99			1
Fluorides	1101	*2.4E+02*	*4/99*			1.3E+01	8/03	4.0E-02	8/03						1
HYDROGEN FLUORIDE (Hydrofluoric acid)	7664-39-3	2.4E+02	4/99			1.4E+01	8/03	4.0E-02	8/03						1
FORMALDEHYDE TAC	50-00-0	5.5E+01	12/08	9.0E+00	12/08	9.0E+00	12/08			6.0E-06 TAC	2.1E-02	3/92			1
GLUTARALDEHYDE	111-30-8					8.0E-02	1/01								1
GLYCOL ETHERS	1115														1
ETHYLENE GLYCOL BUTYL ETHER – EGBE	111-76-2	1.4E+04	4/99												1
ETHYLENE GLYCOL ETHYL ETHER – EGEE	110-80-5	3.7E+02	4/99[1/92]			7.0E+01	2/00								1
ETHYLENE GLYCOL ETHYL ETHER ACETATE – EGEEA	111-15-9	1.4E+02	4/99			3.0E+02	2/00								1
ETHYLENE GLYCOL METHYL ETHER – EGME	109-86-4	9.3E+01	4/99			6.0E+01	2/00								1
ETHYLENE GLYCOL METHYL ETHER ACETATE – EGMEA	110-49-6					9.0E+01	2/00								1
HEXACHLOROBENZENE	118-74-1									5.1E-04	1.8E+00	4/99 [1/91]			1
HEXACHLOROCYCLOHEXANES (mixed or technical grade)	608-73-1									1.1E-03	4.0E+00	4/99 [1/91]	4.0E+00	10/00 [1/92]	1
alpha-HEXACHLOROCYCLOHEXANE	319-84-6									1.1E-03	4.0E+00	4/99 [1/91]	4.0E+00	10/00 [1/92]	1
beta-HEXACHLOROCYCLOHEXANE	319-85-7									1.1E-03	4.0E+00	4/99 [1/91]	4.0E+00	10/00 [1/92]	1
gamma-HEXACHLOROCYCLOHEXANE (Lindane)	58-89-9									3.1E-04	1.1E+00	4/99	1.1E+00	10/00	1
n-HEXANE	110-54-3					7.0E+03	4/00								1
HYDRAZINE	302-01-2					2.0E-01	1/01			4.9E-03	1.7E+01	4/99 [7/90]			1
HYDROCHLORIC ACID (Hydrogen chloride)	7647-01-0	2.1E+03	4/99			9.0E+00	2/00								1
HYDROGEN BROMIDE ... (see Bromine & Compounds)															
HYDROGEN CYANIDE ... (see Cyanide & Compounds)															
HYDROGEN FLUORIDE ... (see Fluorides & Compounds)															

Table last updated: February 9, 2009

Table 1
CONSOLIDATED TABLE OF OEHHA/ARB APPROVED RISK ASSESSMENT HEALTH VALUES°

Substance	Chemical Abstract Number▼	Noncancer Effects								Cancer Risk					
		Acute Inhalation (µg/m³)	Date◆ Value Reviewed [Added]	8-Hour Inhalation (µg/m³)	Date◆ Value Reviewed [Added]	Chronic Inhalation (µg/m³)	Date◆ Value Reviewed [Added]	Chronic Oral (mg/kg-d)	Date◆ Value Reviewed [Added]	Inhalation* Unit Risk (µg/m³)⁻¹	Inhalation* Cancer Potency Factor (mg/kg-d)⁻¹	Date◆ Value Reviewed [Added]	Oral Slope Factor (mg/kg-d)⁻¹	Date◆ Value Reviewed [Added]	MWAF♣
HYDROGEN SELENIDE ... (see Selenium & Compounds)															
HYDROGEN SULFIDE	7783-06-4	4.2E+01	4/99[7/90]			1.0E+01	4/00								1
ISOPHORONE	78-59-1					2.0E+03	12/01								
ISOPROPYL ALCOHOL (Isopropanol)	67-63-0	3.2E+03	4/99			7.0E+03	2/00								1
LEAD AND COMPOUNDS TAC ♫* (inorganic) values also apply to:	7439-92-1 1128 [1130]									1.2E-05 TAC	4.2E-02	4/97	8.5E-03	10/00	1
Lead acetate	*301-04-2*									*1.2E-05 TAC*	*4.2E-02*	*4/97*	*8.5E-03*	*10/00*	*0.637*
Lead phosphate	*7446-27-7*									*1.2E-05 TAC*	*4.2E-02*	*4/97*	*8.5E-03*	*10/00*	*0.7659*
Lead subacetate	*1335-32-6*									*1.2E-05 TAC*	*4.2E-02*	*4/97*	*8.5E-03*	*10/00*	*0.7696*
LINDANE ... (see gamma-Hexachlorocyclohexane)															
MALEIC ANHYDRIDE	108-31-6					7.0E-01	12/01								1
MANGANESE AND COMPOUNDS	7439-96-5 [1132]			1.7E-01	12/08	9.0E-02	12/08								1
MERCURY AND COMPOUNDS (INORGANIC)	7439-97-6 [1133]	6.0E-01	12/08	6.0E-02	12/08	3.0E-02	12/08	1.6E-04	12/08						1
Mercuric chloride	*7487-94-7*	*6.0E-01*	*12/08*	*6.0E-02*	*12/08*	*3.0E-02*	*12/08*	*1.6E-04*	*12/08*						*1*
METHANOL	67-56-1	2.8E+04	4/99			4.0E+03	4/00								1
METHYL BROMIDE (Bromomethane)	74-83-9	3.9E+03	4/99			5.0E+00	2/00								1
METHYL tertiary-BUTYL ETHER	1634-04-4					8.0E+03	2/00			2.6E-07	1.8E-03	11/99			1
METHYL CHLOROFORM (1,1,1-Trichloroethane)	71-55-6	6.8E+04	4/99			1.0E+03	2/00								1
METHYL ETHYL KETONE (2-Butanone)	78-93-3	1.3E+04	4/99												1
METHYL ISOCYANATE	624-83-9					1.0E+00	12/01								1
METHYL MERCURY ... (see Mercury & Compounds)															
4,4'-METHYLENE BIS (2-CHLOROANILINE) (MOCA)	101-14-4									4.3E-04	1.5E+00	4/99			1
METHYLENE CHLORIDE TAC (Dichloromethane)	75-09-2	1.4E+04	4/99			4.0E+02	2/00			1.0E-06 TAC	3.5E-03	7/89			1
4,4'-METHYLENE DIANILINE (AND ITS DICHLORIDE)	101-77-9					2.0E+01	12/01			4.6E-04	1.6E+00	4/99	1.6E+00	10/00	1
METHYLENE DIPHENYL ISOCYANATE	101-68-8					7.0E-01	1/01								1
MICHLER'S KETONE (4,4'-Bis(dimethylamino)benzophenone)	90-94-8									2.5E-04	8.6E-01	4/99			1
N-NITROSODI-n-BUTYLAMINE	924-16-3									3.1E-03	1.1E+01	4/99 [1/92]			1

Table last updated: February 9, 2009

Table 1
CONSOLIDATED TABLE OF OEHHA/ARB APPROVED RISK ASSESSMENT HEALTH VALUES°

Substance	Chemical Abstract Number	Noncancer Effects								Cancer Risk					
		Acute Inhalation (µg/m³)	Date Value Reviewed [Added]	8-Hour Inhalation (µg/m³)	Date Value Reviewed [Added]	Chronic Inhalation (µg/m³)	Date Value Reviewed [Added]	Chronic Oral (mg/kg-d)	Date Value Reviewed [Added]	Inhalation Unit Risk (µg/m³)⁻¹	Inhalation Cancer Potency Factor (mg/kg-d)⁻¹	Date Value Reviewed [Added]	Oral Slope Factor (mg/kg-d)⁻¹	Date Value Reviewed [Added]	MWAF
N-NITROSODI-n-PROPYLAMINE	621-64-7									2.0E-03	7.0E+00	4/99 [1/91]			1
N-NITROSODIETHYLAMINE	55-18-5									1.0E-02	3.6E+01	4/99 [1/91]			1
N-NITROSODIMETHYLAMINE	62-75-9									4.6E-03	1.6E+01	4/99 [1/91]			1
N-NITROSODIPHENYLAMINE	86-30-6									2.6E-06	9.0E-03	4/99			1
N-NITROSO-N-METHYLETHYLAMINE	10595-95-6									6.3E-03	2.2E+01	4/99 [7/90]			1
N-NITROSOMORPHOLINE	59-89-2									1.9E-03	6.7E+00	4/99 [7/92]			1
N-NITROSOPIPERIDINE	100-75-4									2.7E-03	9.4E+00	4/99 [7/92]			1
N-NITROSOPYRROLIDINE	930-55-2									6.0E-04	2.1E+00	4/99 [7/90]			1
NAPHTHALENE ... (see Polycyclic aromatic hydrocarbons)															
NICKEL AND COMPOUNDS[TAC] *values also apply to:*	7440-02-0 [1145]	6.0E+00	4/99			5.0E-02	2/00	5.0E-02	10/00	2.6E-04 TAC	9.1E-01	8/91			1
Nickel acetate	*373-02-4*	*6.0E+00*	*4/99*			*5.0E-02*	*2/00*	*5.0E-02*	*10/00*	*2.6E-04 TAC*	*9.1E-01*	*8/91*			*0.3321*
Nickel carbonate	*3333-67-3*	*6.0E+00*	*4/99*			*5.0E-02*	*2/00*	*5.0E-02*	*10/00*	*2.6E-04 TAC*	*9.1E-01*	*8/91*			*0.4945*
Nickel carbonyl	*13463-39-3*	*6.0E+00*	*4/99*			*5.0E-02*	*2/00*	*5.0E-02*	*10/00*	*2.6E-04 TAC*	*9.1E-01*	*8/91*			*0.3438*
Nickel hydroxide	*12054-48-7*	*6.0E+00*	*4/99*			*5.0E-02*	*2/00*	*5.0E-02*	*10/00*	*2.6E-04 TAC*	*9.1E-01*	*8/91*			*0.6332*
Nickelocene	*1271-28-9*	*6.0E+00*	*4/99*			*5.0E-02*	*2/00*	*5.0E-02*	*10/00*	*2.6E-04 TAC*	*9.1E-01*	*8/91*			*0.4937*
NICKEL OXIDE	1313-99-1	6.0E+00	4/99			1.0E-01	2/00	5.0E-02	10/00	2.6E-04 TAC	9.1E-01	8/91			0.7859
Nickel refinery dust from the pyrometallurgical process	*1146*	*6.0E+00*	*4/99*			*5.0E-02*	*2/00*	*5.0E-02*	*10/00*	*2.6E-04 TAC*	*9.1E-01*	*8/91*			*1*
Nickel subsulfide	*12035-72-2*	*6.0E+00*	*4/99*			*5.0E-02*	*2/00*	*5.0E-02*	*10/00*	*2.6E-04 TAC*	*9.1E-01*	*8/91*			*0.2443*
NITRIC ACID	7697-37-2	8.6E+01	4/99												1
NITROGEN DIOXIDE	10102-44-0	4.7E+02	4/99[1/92]												1
p-NITROSODIPHENYLAMINE	156-10-5									6.3E-06	2.2E-02	4/99			1
OZONE	10028-15-6	1.8E+02	4/99[1/92]												1
PARTICULATE EMISSIONS FROM DIESEL-FUELED ENGINES[TAC] ■¶	9901					5.0E+00 TAC	8/98			3.0E-04 TAC	1.1E+00	8/98			1
PENTACHLOROPHENOL ... (see Chlorophenols)															

Table last updated: February 9, 2009

Table 1
CONSOLIDATED TABLE OF OEHHA/ARB APPROVED RISK ASSESSMENT HEALTH VALUES°

Substance	Chemical Abstract Number▼	Noncancer Effects								Cancer Risk					
		Acute Inhalation ($\mu g/m^3$)	Date◆ Value Reviewed [Added]	8-Hour Inhalation ($\mu g/m^3$)	Date◆ Value Reviewed [Added]	Chronic Inhalation ($\mu g/m^3$)	Date◆ Value Reviewed [Added]	Chronic Oral (mg/kg-d)	Date◆ Value Reviewed [Added]	Inhalation* Unit Risk $(\mu g/m^3)^{-1}$	Inhalation* Cancer Potency Factor $(mg/kg\text{-}d)^{-1}$	Date◆ Value Reviewed [Added]	Oral Slope Factor $(mg/kg\text{-}d)^{-1}$	Date◆ Value Reviewed [Added]	MWAF±
PERCHLOROETHYLENE TAC (Tetrachloroethylene)	127-18-4	2.0E+04	4/99			3.5E+01 TAC	10/91			5.9E-06 TAC	2.1E-02	10/91			1
PHENOL	108-95-2	5.8E+03	4/99			2.0E+02	4/00								1
PHOSGENE	75-44-5	4.0E+00	4/99												1
PHOSPHINE	7803-51-2					8.0E-01	9/02								1
PHOSPHORIC ACID	7664-38-2					7.0E+00	2/00								1
PHTHALIC ANHYDRIDE	85-44-9					2.0E+01	1/01								1
PCB (POLYCHLORINATED BIPHENYLS) (unspeciated mixture) [lowest risk] ☼*	1336-36-3									2.0E-05	7.0E-02	4/99	7.0E-02	10/00	1
PCB (POLYCHLORINATED BIPHENYLS) (unspeciated mixture) [low risk] ☼*	1336-36-3									1.1E-04	4.0E-01*		4.0E-01*		1
PCB (POLYCHLORINATED BIPHENYLS) (unspeciated mixture) [high risk] ☼*	1336-36-3									5.7E-04	2.0E+00	4/99	2.0E+00	10/00	1
PCB (POLYCHLORINATED BIPHENYLS (speciated) ϖ															
3,3',4,4'-TETRACHLOROBIPHENYL (PCB 77)	32598-13-3					4.0E-01	8/03	1.0E-04	8/03	3.8E-03	1.3E+01	8/03	1.3E+01	8/03	1
3,4,4',5-TETRACHLOROBIPHENYL (PCB 81)	70362-50-4					4.0E-01	8/03	1.0E-04	8/03	3.8E-03	1.3E+01	8/03	1.3E+01	8/03	1
2,3,3',4,4'-PENTACHLOROBIPHENYL (PCB 105)	32598-14-4					4.0E-01	8/03	1.0E-04	8/03	3.8E-03	1.3E+01	8/03	1.3E+01	8/03	1
2,3,4,4',5-PENTACHLOROBIPHENYL (PCB 114)	74472-37-0					8.0E-02	8/03	2.0E-05	8/03	1.9E-02	6.5E+01	8/03	6.5E+01	8/03	1
2,3',4,4',5-PENTACHLOROBIPHENYL (PCB 118)	31508-00-6					4.0E-01	8/03	1.0E-04	8/03	3.8E-03	1.3E+01	8/03	1.3E+01	8/03	1
2,3',4,4',5'-PENTACHLOROBIPHENYL (PCB 123)	65510-44-3					4.0E-01	8/03	1.0E-04	8/03	3.8E-03	1.3E+01	8/03	1.3E+01	8/03	1
3,3',4,4',5-PENTACHLOROBIPHENYL (PCB 126)	57465-28-8					4.0E-04	8/03	1.0E-07	8/03	3.8E+00	1.3E+04	8/03	1.3E+04	8/03	1
2,3,3',4,4',5-HEXACHLOROBIPHENYL (PCB 156)	38380-08-4					8.0E-02	8/03	2.0E-05	8/03	1.9E-02	6.5E+01	8/03	6.5E+01	8/03	1
2,3,3',4,4',5'-HEXACHLOROBIPHENYL (PCB 157)	69782-90-7					8.0E-02	8/03	2.0E-05	8/03	1.9E-02	6.5E+01	8/03	6.5E+01	8/03	1

Table last updated: February 9, 2009

Table 1
CONSOLIDATED TABLE OF OEHHA/ARB APPROVED RISK ASSESSMENT HEALTH VALUES°

Substance	Chemical Abstract Number▼	Noncancer Effects								Cancer Risk					
		Acute Inhalation ($\mu g/m^3$)	Date Value Reviewed [Added]◆	8-Hour Inhalation ($\mu g/m^3$)	Date Value Reviewed [Added]◆	Chronic Inhalation ($\mu g/m^3$)	Date Value Reviewed [Added]◆	Chronic Oral (mg/kg-d)	Date Value Reviewed [Added]◆	Inhalation Unit Risk $(\mu g/m^3)^{-1}$*	Inhalation Cancer Potency Factor $(mg/kg\text{-}d)^{-1}$*	Date Value Reviewed [Added]◆	Oral Slope Factor $(mg/kg\text{-}d)^{-1}$	Date Value Reviewed [Added]◆	MWAF♣
2,3',4,4',5,5'-HEXACHLOROBIPHENYL (PCB 167)	52663-72-6					4.0E+00	8/03	1.0E-03	8/03	3.8E-04	1.3E+00	8/03	1.3E+00	8/03	1
3,3',4,4',5,5'-HEXACHLOROBIPHENYL (PCB 169)	32774-16-6					4.0E-03	8/03	1.0E-06	8/03	3.8E-01	1.3E+03	8/03	1.3E+03	8/03	1
2,3,3',4,4',5,5'-HEPTACHLOROBIPHENYL (PCB 189)	39635-31-9					4.0E-01	8/03	1.0E-04	8/03	3.8E-03	1.3E+01	8/03	1.3E+01	8/03	1
POLYCHLORINATED DIBENZO-*P*-DIOXINS (PCDD) (Treated as 2,3,7,8-TCDD for HRA)[TAC] ●	1085 1086					4.0E-05	2/00	1.0E-08	10/00	3.8E+01 TAC	1.3E+05	8/86	1.3E+05 TAC	8/86	1
2,3,7,8-TETRACHLORODIBENZO-*P*-DIOXIN[TAC]	1746-01-6					4.0E-05	2/00	1.0E-08	10/00	3.8E+01 TAC	1.3E+05	8/86	1.3E+05 TAC	8/86	1
1,2,3,7,8-PENTACHLORODIBENZO-*P*-DIOXIN	40321-76-4					4.0E-05	8/03	1.0E-08	8/03	3.8E+01	1.3E+05	8/03	1.3E+05	8/03	1
1,2,3,4,7,8-HEXACHLORODIBENZO-*P*-DIOXIN	39227-28-6					4.0E-04	2/00	1.0E-07	10/00	3.8E+00	1.3E+04	4/99	1.3E+04	10/00	1
1,2,3,6,7,8-HEXACHLORODIBENZO-*P*-DIOXIN	57653-85-7					4.0E-04	2/00	1.0E-07	10/00	3.8E+00	1.3E+04	4/99	1.3E+04	10/00	1
1,2,3,7,8,9-HEXACHLORODIBENZO-*P*-DIOXIN	19408-74-3					4.0E-04	2/00	1.0E-07	10/00	3.8E+00	1.3E+04	4/99	1.3E+04	10/00	1
1,2,3,4,6,7,8-HEPTACHLORODIBENZO-*P*-DIOXIN	35822-46-9					4.0E-03	2/00	1.0E-06	10/00	3.8E-01	1.3E+03	4/99	1.3E+03	10/00	1
1,2,3,4,6,7,8,9-OCTACHLORODIBENZO-*P*-DIOXIN	3268-87-9					4.0E-01	8/03	1.0E-04	8/03	3.8E-03	1.3E+01	8/03	1.3E+01	8/03	1
POLYCHLORINATED DIBENZOFURANS (PCDF)[TAC] ● (Treated as 2,3,7,8-TCDD for HRA)	1080					4.0E-05	2/00	1.0E-08	10/00	3.8E+01 TAC	1.3E+05	8/86	1.3E+05 TAC	8/86	1
2,3,7,8-TETRACHLORODIBENZOFURAN	5120-73-19					4.0E-04	2/00	1.0E-07	10/00	3.8E+00	1.3E+04	4/99	1.3E+04	10/00	1
1,2,3,7,8-PENTACHLORODIBENZOFURAN	57117-41-6					8.0E-04	2/00	2.0E-07	10/00	1.9E+00	6.5E+03	4/99	6.5E+03	10/00	1
2,3,4,7,8-PENTACHLORODIBENZOFURAN	57117-31-4					8.0E-05	2/00	2.0E-08	10/00	1.9E+01	6.5E+04	4/99	6.5E+04	10/00	1
1,2,3,4,7,8-HEXACHLORODIBENZOFURAN	70648-26-9					4.0E-04	2/00	1.0E-07	10/00	3.8E+00	1.3E+04	4/99	1.3E+04	10/00	1

Table last updated: February 9, 2009

Table 1
CONSOLIDATED TABLE OF OEHHA/ARB APPROVED RISK ASSESSMENT HEALTH VALUES°

Substance	Chemical Abstract Number▼	Noncancer Effects								Cancer Risk					
		Acute Inhalation (µg/m³)	Date◆ Value Reviewed [Added]	8-Hour Inhalation (µg/m³)	Date◆ Value Reviewed [Added]	Chronic Inhalation (µg/m³)	Date◆ Value Reviewed [Added]	Chronic Oral (mg/kg-d)	Date◆ Value Reviewed [Added]	Inhalation Unit Risk* (µg/m³)⁻¹	Inhalation Cancer Potency Factor* (mg/kg-d)⁻¹	Date◆ Value Reviewed [Added]	Oral Slope Factor (mg/kg-d)⁻¹	Date◆ Value Reviewed [Added]	MWAF♣
1,2,3,6,7,8-HEXACHLORODIBENZOFURAN	57117-44-9					4.0E-04	2/00	1.0E-07	10/00	3.8E+00	1.3E+04	4/99	1.3E+04	10/00	1
1,2,3,7,8,9-HEXACHLORODIBENZOFURAN	72918-21-9					4.0E-04	2/00	1.0E-07	10/00	3.8E+00	1.3E+04	4/99	1.3E+04	10/00	1
2,3,4,6,7,8-HEXACHLORODIBENZOFURAN	60851-34-5					4.0E-04	2/00	1.0E-07	10/00	3.8E+00	1.3E+04	4/99	1.3E+04	10/00	1
1,2,3,4,6,7,8-HEPTACHLORODIBENZOFURAN	67562-39-4					4.0E-03	2/00	1.0E-06	10/00	3.8E-01	1.3E+03	4/99	1.3E+03	10/00	1
1,2,3,4,7,8,9-HEPTACHLORODIBENZOFURAN	55673-89-7					4.0E-03	2/00	1.0E-06	10/00	3.8E-01	1.3E+03	4/99	1.3E+03	10/00	1
1,2,3,4,6,7,8,9-OCTACHLORODIBENZOFURAN	39001-02-0					4.0E-01	8/03	1.0E-04	8/03	3.8E-03	1.3E+01	8/03	1.3E+01	8/03	1
POLYCYCLIC AROMATIC HYDROCARBON (PAH) Φ [Treated as B(a)P for HRA]◆	1150 1151									1.1E-03	3.9E+00	4/99 [4/94]	1.2E+01	10/00 [4/94]	1
BENZ(A)ANTHRACENE◆	56-55-3									1.1E-04	3.9E-01	4/99 [4/94]	1.2E+00	10/00 [4/94]	1
BENZO(A)PYRENE◆	50-32-8									1.1E-03	3.9E+00	4/99 [4/94]	1.2E+01	10/00 [4/94]	1
BENZO(B)FLUORANTHENE◆	205-99-2									1.1E-04	3.9E-01	4/99 [4/94]	1.2E+00	10/00 [4/94]	1
BENZO(J)FLUORANTHENE◆	205-82-3									1.1E-04	3.9E-01	4/99 [4/94]	1.2E+00	10/00 [4/94]	1
BENZO(K)FLUORANTHENE◆	207-08-9									1.1E-04	3.9E-01	4/99 [4/94]	1.2E+00	10/00 [4/94]	1
CHRYSENE◆	218-01-9									1.1E-05	3.9E-02	4/99 [4/94]	1.2E-01	10/00 [4/94]	1
DIBENZ(A,H)ACRIDINE◆	226-36-8									1.1E-04	3.9E-01	4/99 [4/94]	1.2E+00	10/00 [4/94]	1
DIBENZ(A,H)ANTHRACENE◆	53-70-3									1.2E-03	4.1E+00	4/99 [4/94]	4.1E+00	10/00 [4/94]	1
DIBENZ(A,J)ACRIDINE◆	224-42-0									1.1E-04	3.9E-01	4/99 [4/94]	1.2E+00	10/00 [4/94]	1
DIBENZO(A,E)PYRENE◆	192-65-4									1.1E-03	3.9E+00	4/99 [4/94]	1.2E+01	10/00 [4/94]	1
DIBENZO(A,H)PYRENE◆	189-64-0									1.1E-02	3.9E+01	4/99 [4/94]	1.2E+02	10/00 [4/94]	1

Table last updated: February 9, 2009

Table 1
CONSOLIDATED TABLE OF OEHHA/ARB APPROVED RISK ASSESSMENT HEALTH VALUES°

Substance	Chemical Abstract Number▼	Noncancer Effects								Cancer Risk					
		Acute Inhalation (µg/m³)	Date Value Reviewed [Added]◆	8-Hour Inhalation (µg/m³)	Date Value Reviewed [Added]◆	Chronic Inhalation (µg/m³)	Date Value Reviewed [Added]◆	Chronic Oral (mg/kg-d)	Date Value Reviewed [Added]◆	Inhalation Unit Risk (µg/m³)⁻¹*	Inhalation Cancer Potency Factor (mg/kg-d)⁻¹*	Date Value Reviewed [Added]◆	Oral Slope Factor (mg/kg-d)⁻¹	Date Value Reviewed [Added]◆	MWAF♣
DIBENZO(A,I)PYRENE◆	189-55-9									1.1E-02	3.9E+01	4/99 [4/94]	1.2E+02	10/00 [4/94]	1
DIBENZO(A,L)PYRENE◆	191-30-0									1.1E-02	3.9E+01	4/99 [4/94]	1.2E+02	10/00 [4/94]	1
7H-DIBENZO(C,G)CARBAZOLE◆	194-59-2									1.1E-03	3.9E+00	4/99 [4/94]	1.2E+01	10/00 [4/94]	1
7,12-DIMETHYLBENZ(A)ANTHRACENE◆	57-97-6									7.1E-02	2.5E+02	4/99 [4/94]	2.5E+02	10/00 [4/94]	1
1,6-DINITROPYRENE◆	42397-64-8									1.1E-02	3.9E+01	4/99 [4/94]	1.2E+02	10/00 [4/94]	1
1,8-DINITROPYRENE◆	42397-65-9									1.1E-03	3.9E+00	4/99 [4/94]	1.2E+01	10/00 [4/94]	1
INDENO(1,2,3-C,D)PYRENE◆	193-39-5									1.1E-04	3.9E-01	4/99 [4/94]	1.2E+00	10/00 [4/94]	1
3-METHYLCHOLANTHRENE◆	56-49-5									6.3E-03	2.2E+01	4/99 [4/94]	2.2E+01	10/00 [4/94]	1
5-METHYLCHRYSENE◆	3697-24-3									1.1E-03	3.9E+00	4/99 [4/94]	1.2E+01	10/00 [4/94]	1
NAPHTHALENE	91-20-3					9.0E+00	4/00			3.4E-05	1.2E-01	8/04			1
5-NITROACENAPHTHENE◆	602-87-9									3.7E-05	1.3E-01	4/99 [4/94]	1.3E-01	10/00 [4/94]	1
6-NITROCHRYSENE◆	7496-02-8									1.1E-02	3.9E+01	4/99 [4/94]	1.2E+02	10/00 [4/94]	1
2-NITROFLUORENE◆	607-57-8									1.1E-05	3.9E-02	4/99 [4/94]	1.2E-01	10/00 [4/94]	1
1-NITROPYRENE◆	5522-43-0									1.1E-04	3.9E-01	4/99 [4/94]	1.2E+00	10/00 [4/94]	1
4-NITROPYRENE◆	57835-92-4									1.1E-04	3.9E-01	4/99 [4/94]	1.2E+00	10/00 [4/94]	1
POTASSIUM BROMATE.... ... (see Bromine & Compounds)															
1,3-PROPANE SULTONE	1120-71-4									6.9E-04	2.4E+00	4/99			1
PROPYLENE (PROPENE)	115-07-1					3.0E+03	4/00								1
PROPYLENE GLYCOL MONOMETHYL ETHER	107-98-2					7.0E+03	2/00								1
PROPYLENE OXIDE	75-56-9	3.1E+03	4/99			3.0E+01	2/00			3.7E-06	1.3E-02	4/99 [7/90]			1
SELENIUM AND COMPOUNDS	7782-49-2 [1170]					2.0E+01	12/01								1
HYDROGEN SELENIDE	7783-07-5	5.0E+00	4/99												1
Selenium sulfide	*7446-34-6*					*2.0E+01*	*12/01*								*1*

Table last updated: February 9, 2009

Table 1
CONSOLIDATED TABLE OF OEHHA/ARB APPROVED RISK ASSESSMENT HEALTH VALUES°

Substance	Chemical Abstract Number▼	Noncancer Effects								Cancer Risk					
		Acute Inhalation (µg/m³)	Date Value Reviewed [Added]◆	8-Hour Inhalation (µg/m³)	Date Value Reviewed [Added]◆	Chronic Inhalation (µg/m³)	Date Value Reviewed [Added]◆	Chronic Oral (mg/kg-d)	Date Value Reviewed [Added]◆	Inhalation Unit Risk (µg/m³)⁻¹*	Inhalation Cancer Potency Factor (mg/kg-d)⁻¹*	Date Value Reviewed [Added]◆	Oral Slope Factor (mg/kg-d)⁻¹	Date Value Reviewed [Added]◆	M W A F*
SILICA [CRYSTALLINE, RESPIRABLE]	1175					3.0E+00	2/05								1
SODIUM HYDROXIDE	1310-73-2	8.0E+00	4/99												1
STYRENE	100-42-5	2.1E+04	4/99			9.0E+02	4/00								1
SULFATES	9960	1.2E+02	4/99												1
SULFUR DIOXIDE	7446-09-5	6.6E+02	4/99[1/92]												1
SULFURIC ACID AND OLEUM	9961	1.2E+02	4/99			*1.0E+00*	*12/01*								1
SULFURIC ACID	*7664-93-9*	*1.2E+02*	*4/99*			1.0E+00	12/01								*1*
SULFUR TRIOXIDE	*7446-71-9*	*1.2E+02*	*4/99*			*1.0E+00*	*12/01*								*1*
OLEUM	*8014-95-7*	*1.2E+02*	*4/99*			*1.0E+00*	*12/01*								*1*
1,1,2,2-TETRACHLOROETHANE	79-34-5									5.8E-05	2.0E-01	4/99			1
TETRACHLOROPHENOLS ... (see Chlorophenols)															
2,4,5-TRICHLOROPHENOL ... (see Chlorophenols)															
2,4,6-TRICHLOROPHENOL ... (see Chlorophenols)															
THIOACETAMIDE	62-55-5									1.7E-03	6.1E+00	4/99			1
TOLUENE	108-88-3	3.7E+04	4/99			3.0E+02	4/00								1
Toluene diisocyantates	*26471-62-5*					*7.0E-02*	*1/01*			*1.1E-05*	*3.9E-02*	*4/99*			*1*
TOLUENE-2,4-DIISOCYANATE	584-84-9					7.0E-02	1/01			1.1E-05	3.9E-02	4/99			1
TOLUENE-2,6-DIISOCYANATE	91-08-7					7.0E-02	1/01			1.1E-05	3.9E-02	4/99			1
1,1,2-TRICHLOROETHANE (Vinyl trichloride)	79-00-5									1.6E-05	5.7E-02	4/99			1
TRICHLOROETHYLENE[TAC]	79-01-6					6.0E+02	4/00			2.0E-06 TAC	7.0E-03	10/90			1
TRIETHYLAMINE	121-44-8	2.8E+03	4/99			2.0E+02	9/02								1
URETHANE (Ethyl carbamate)	51-79-6									2.9E-04	1.0E+00	4/99 [7/90]			1
Vanadium Compounds	*N/A*														*1*
Vanadium (fume or dust)	*7440-62-2*	*3.0E+01*	*4/99*												*1*
VANADIUM PENTOXIDE	1314-62-1	3.0E+01	4/99												1
VINYL ACETATE	108-05-4					2.0E+02	12/01								1
VINYL CHLORIDE[TAC] (Chloroethylene)	75-01-4	1.8E+05	4/99							7.8E-05 TAC	2.7E-01	12/90			1
VINYLIDENE CHLORIDE (1,1-Dichloroethylene)	75-35-4					7.0E+01	1/01								1

Table last updated: February 9, 2009

Table 1
CONSOLIDATED TABLE OF OEHHA/ARB APPROVED RISK ASSESSMENT HEALTH VALUES°

Substance	Chemical Abstract Number▼	Noncancer Effects								Cancer Risk					
		Acute Inhalation (µg/m³)	Date Value Reviewed [Added]◆	8-Hour Inhalation (µg/m³)	Date Value Reviewed [Added]◆	Chronic Inhalation (µg/m³)	Date Value Reviewed [Added]◆	Chronic Oral (mg/kg-d)	Date Value Reviewed [Added]◆	Inhalation Unit Risk (µg/m³)⁻¹*	Inhalation Cancer Potency Factor (mg/kg-d)⁻¹*	Date Value Reviewed [Added]◆	Oral Slope Factor (mg/kg-d)⁻¹	Date Value Reviewed [Added]◆	MWAF♣
XYLENES (mixed isomers)	1330-20-7	2.2E+04	4/99			7.0E+02	4/00								1
m-XYLENE	108-38-3	2.2E+04	4/99			7.0E+02	4/00								1
o-XYLENE	95-47-6	2.2E+04	4/99			7.0E+02	4/00								1
p-XYLENE	106-42-3	2.2E+04	4/99			7.0E+02	4/00								1

Table last updated: February 9, 2009

Table 1
CONSOLIDATED TABLE OF OEHHA/ARB APPROVED RISK ASSESSMENT HEALTH VALUES°

Purpose: The purpose of this reference table is to provide a quick list of all health values that have been approved by the Office of Environmental Health Hazard Assessment (OEHHA) and the Air Resources Board (ARB) for use in facility health risk assessments conducted for the AB 2588 Air Toxics Hot Spots Program. The OEHHA has developed and adopted new risk assessment guidelines that update and replace the California Air Pollution Control Officers Association's (CAPCOA) *Air Toxics "Hot Spots" Program Revised 1992 Risk Assessment Guidelines, October 1993.* The OEHHA has adopted four technical support documents for these guidelines, which can be found on their website (http://www.oehha.ca.gov/air/hot_spots/index.html). This table lists the OEHHA adopted inhalation and oral cancer slope factors, noncancer acute Reference Exposure Levels (RELs), and inhalation and oral noncancer chronic RELs. OEHHA is still in the process of adopting new health values. Therefore, new health values will periodically be added to, or deleted from, this table. Users of this table are advised to monitor the OEHHA website (www.oehha.ca.gov) for any updates to the health values.

May 2008 update: The Air Resources Board adopted amendments to the AB 2588 Air Toxics "Hot Spots" Emission Inventory Criteria and Guidelines Regulation (Title 17, California Code of Regulations, Section 93300.5) on November 16, 2006. The amendments became effective on September 26, 2007, after approval from the Office of Administrative Law. Under the new amendments, the substances previously listed in Appendix A-I *(Substances For Which Emissions Must Be Quantified)* and Appendix F *(Criteria For Inputs For Risk Assessment Using Screening Air Dispersion Modeling)* of the ARB's *Air Toxics "Hot Spots" Emission Inventory Criteria and Guidelines (EICG) (July 1997)* have been removed from this table.

○ Substances written in *italics* do not have explicit OEHHA approved health values, but are included in this table to clarify applicability of OEHHA adopted heath effects values to individual or grouped substances listed in the *Air Toxics "Hot Spots" Emission Inventory Criteria and Guidelines*, Appendix A-I list of *"Substances For Which Emissions Must Be Quantified"*.

▼ Chemical Abstract Service Number (CAS): For chemical groupings and mixtures where a CAS number is not applicable, the 4-digit code used in the *Air Toxics "Hot Spots" Emission Inventory Criteria and Guidelines (EICG) Report* is listed. The 4-digit codes enclosed in brackets [ ] are codes that have been phased out, but may still appear on previously reported Hot Spots emissions. For information on the origin and use of the 4-digit code, see the EICG report.

◆ Date Value Reviewed [Added]: These columns list the date that the health value was last reviewed by OEHHA and the Scientific Review Panel, and/or approved for use in the AB 2588 Air Toxics Hot Spots Program. If the health value is unchanged since it was first approved for use in the Hot Spots Program, then the date that the value was first approved for use by CAPCOA is listed within the brackets [ ].

- April 1999 is listed for the cancer potency values and noncancer acute RELs, which have been adopted by the OEHHA as part of the AB 2588 Hot Spot Risk Assessment Guidelines.
- February 2000, April 2000, January 2001, and December 2001 are listed for the first set of 22, the second set of 16, the third set of 22, and the fourth set of 12 noncancer chronic RELs, respectively. The chronic REL for carbon disulfide was adopted in May 2002. Chronic RELs for phosphine and triethylamine were adopted in September 2002. Chronic RELs for fluorides including hydrogen fluoride were adopted August 2003. Chronic REL for silica [crystalline respirable] was adopted February 2005.
- October 2000 is listed for the oral chronic RELs and oral cancer slope factors.
- Cancer potency value adopted for naphthalene in August 2004. The inhalation and oral cancer potency values for ethyl benzene were adopted in November 2007.
- For the substances identified as Toxic Air Contaminants, the Air Resources Board hearing date is listed. The dates for acetaldehyde, benzo[a]pyrene, and methyl tertiary-butyl ether represent the dates the values were approved by the Scientific Review Panel.
- On December 19, 2008, OEHHA adopted new acute, 8-hour, and chronic RELs for acetaldehyde, acrolein, arsenic, formaldehyde, manganese, and mercury. The most current health values can be found at: http://www.oehha.ca.gov/air/allrels.html. Note that the 8-hour RELs are not included in the HARP program. These health factors will be added after OEHHA approves the Guidelines Manual (Part V).

  Note: 1. OEHHA presents the new oral RELs in micrograms (µg/kg-d) and we converted them to milligrams (mg/kg-d) for consistency.

  2. Acute RELs with longer averaging periods (i.e., 4-hour, 6-hour, and 7-hour) will now use the 1-hour averaging period. The affected chemicals are: arsenic & inorganic arsenic compounds, benzene, carbon disulfide, carbon tetrachloride, chloroform, ethylene glycol monoethyl ether, ethylene glycol monoethyl ether acetate, and ethylene glycol monomethyl ether.

  3. At OEHHA's direction, the chronic oral REL for arsenic does not apply to arsine because arsine is a gas and not particle associated.

* Inhalation cancer potency factor: The "unit risk factor" has been replaced in the new risk assessment algorithms by a factor called the "inhalation cancer potency factor". Inhalation cancer potency factors are expressed as units of inverse dose [i.e., $(mg/kg\text{-}day)^{-1}$]. They were derived from unit risk factors [units = $(ug/m^3)^{-1}$] by assuming that a receptor weighs 70 kilograms and breathes 20 cubic meters of air per day. The inhalation potency factor is used to calculate a potential inhalation cancer risk using the new risk assessment algorithms defined in the OEHHA, *Air Toxics Hot Spots Program; Part IV; Technical Support Document for Exposure Assessment and Stochastic Analysis (September 2000).*

♣ Molecular Weight Adjustment Factor: Molecular weight adjustment factors (MWAF) are only to be used when a toxic metal has a cancer potency factor. For most of the Hot Spots toxic metals, the OEHHA cancer potency factor applies to the weight of the toxic metal atom contained in the overall compound. Some of the Hot Spots compounds contain various elements along with the toxic metal atom (e.g., "Nickel hydroxide", CAS number 12054-48-7, has a formula of H_2NiO_2). Therefore, an adjustment to the reported pounds of the overall compound is needed before applying the OEHHA cancer potency factor for "Nickel and compounds" to such a compound. This ensures that the cancer potency factor is applied only to the fraction of the overall weight of the emissions that are associated with health effects of the metal. In other cases, the Hot Spots metals are already reported as the metal atom equivalent (e.g., CAS 7440-02-0, "Nickel"), and these cases do not use any further molecular weight adjustment. (Refer to Note [7] in Appendix A, List of Substances in the EICG Report for further information on how the emissions of various Hot Spots metal compounds are reported.) The appropriate molecular weight adjustment factors (MWAF) to be used along with the OEHHA cancer potency factors for Hot Spots metals can be found in the MWAF column of this table.

So, for example, assume 100 pounds of "Nickel hydroxide" emissions are reported under CAS number 12054-48-7. To get the Nickel atom equivalent of these emissions, multiply by the listed MWAF (0.6332) for Nickel hydroxide:

- 100 pounds x 0.6332 = 63.32 pounds of Nickel atom equivalent

This step should be completed prior to applying the OEHHA cancer potency factor for "Nickel and compounds" in a calculation for a prioritization score or risk assessment calculation. (For more information see Chapter 8 of OEHHA's document, *The Air Toxics Hot Spots Program Guidance Manual for Preparation of Health Risk Assessments.*)

Note: The value listed in the MWAF column for Asbestos is not a molecular weight adjustment. This is a conversion factor for adjusting mass to fibers or structures. See Appendix C of OEHHA's document *The Air Toxics Hot Spots Program Guidance Manual for Preparation of Health Risk Assessments* for more information on Asbestos, or see the EICG report for reporting guidance. Also see the Asbestos footnote (designated by the symbol ¤)

Table last updated: February 9, 2009

Table 1
CONSOLIDATED TABLE OF OEHHA/ARB APPROVED RISK ASSESSMENT HEALTH VALUES°

N/A	Not Applicable
TAC	Toxic Air Contaminant: The Air Resources Board has identified this substance as a Toxic Air Contaminant.
¤	Asbestos: The units for the Inhalation Cancer Potency factor for asbestos are (100 PCM fibers/m^3)$^{-1}$. A conversion factor of 100 fibers/0.003 µg can be multiplied by a receptor concentration of asbestos expressed in µg/m^3. Unless other information necessary to estimate the concentration (fibers/m^3) of asbestos at receptors of interest is available. A unit risk factor of 1.9 E 10^{-4} (µg/m^3)$^{-1}$ and an inhalation cancer potency factor of 2.2 E 10^{+2} (mg/kg BW * day)$^{-1}$ are available. For more information on asbestos quantity conversion factors, see Appendix C of OEHHA's *The Air Toxics Hot Spots Program Risk Assessment Guidelines; Part II; Technical Support Document for Describing Available Cancer Potency Factors*, and Appendix C of OEHHA's document *The Air Toxics Hot Spots Program Guidance Manual for Preparation of Health Risk Assessments.*
∅	Hexavalent Chromium: The oral cancer slope factor for chromium 6+ and compounds has been withdrawn by the Office of Environmental Health Hazard Assessment.
♫	Inorganic Lead: Inorganic Lead was identified by the Air Resources Board as a Toxic Air Contaminant in April 1997. Since information on noncancer health effects show no identified threshold, no Reference Exposure Level has been developed. The document, *Risk Management Guidelines for New, Modified, and Existing Sources of Lead, March 2001*, has been developed by ARB and OEHHA staff for assessing noncancer health impacts from sources of lead. See Appendix F of OEHHA's document *The Air Toxics Hot Spots Program Guidance Manual for Preparation of Health Risk Assessments* for an overview of how to evaluate noncancer impacts from exposure to lead using these risk management guidelines.
Φ	Polycyclic Aromatic Hydrocarbons (PAHs): These substances are PAH or PAH-derivatives that have OEHHA-developed Potency Equivalency Factors (PEFs) which were approved by the Scientific Review Panel in April 1994 (see ARB document entitled *Benzo[a]pyrene as a Toxic Air Contaminant*). PAH inhalation slope factors listed here have been adjusted by the PEFs. See Appendix G of OEHHA's document *The Air Toxics Hot Spots Program Guidance Manual for Preparation of Health Risk Assessments* for more information. See section 8.2.3 of OEHHA's *The Air Toxics Hot Spots Program Guidance Manual for Preparation of Health Risk Assessments* for conducting health risks when total (unspeciated) PAHs are reported.
☼	Polychlorinated Biphenyls: (unspeciated mixtures) Lowest Risk: For use in cases where congeners with more than four chlorines comprise less than one-half percent of total polychlorinated biphenyls. High Risk: For use in cases where congeners with more than four chlorines do not comprise less than one-half percent of total polychlorinated biphenyls. Low Risk: This number would not ordinarily be used in the Hot Spots program. Chronic Oral: The chronic oral value is U.S. EPA's 1996 oral Reference Dose for Aroclor-1254.
ϖ	Polychlorinated Biphenyls (speciated): Values calculated using WHO_{97} TEF procedure. See OEHHA memo dated August 29, 2003.
•	Polychlorinated Dibenzo-*p*-dioxins and Polychlorinated Dibenzofurans (also referred to as chlorinated dioxins and dibenzofurans): The OEHHA has adopted the World Health Organization 1997 (WHO_{-97}) Toxicity Equivalency Factor scheme for evaluating the cancer risk due to exposure to samples containing mixtures of polychlorinated dibenzo-*p*-dioxins (PCDD) and polychlorinated dibenzofurans (PCDF) and determining cancer risks for a number of specific PCB congeners. See Appendix A of OEHHA's *Technical Support Document For Describing Available Cancer Potency Factors* for more information about the scheme. See Appendix E of OEHHA's *The Air Toxics Hot Spots Program Guidance Manual for Preparation of Health Risk Assessments* for the methodology for calculating 2,3,7,8-equivalents for PCDD, PCDFs and a number of specific PCB congeners. See section 8.2.3 of OEHHA's *The Air Toxics Hot Spots Program Guidance Manual for Preparation of Health Risk Assessments* for conducting health risks when total (unspeciated) chlorinated dioxins and furans are reported.
¶	Particulate Emissions from Diesel-Fueled Engines: The inhalation cancer potency factor and chronic REL were derived from whole diesel exhaust and should be used only for impacts from the inhalation pathway. The inhalation impacts from speciated emissions from diesel-fueled engines are already accounted for in the inhalation cancer potency factor and REL. However, at the discretion of the risk assessor, speciated emissions from diesel-fueled engines may be used to estimate acute noncancer health impacts or the contribution to cancer risk or chronic noncancer health impacts for the non-inhalation exposure pathway. See Appendix D of OEHHA's document *The Air Toxics Hot Spots Program Guidance Manual for Preparation of Health Risk Assessments* for more information.

Table last updated: February 9, 2009

MSDS Number: **B2347** * * * * * *Effective Date: **11/17/99*** * * * * *Supercedes: **12/08/96***

MSDS Material Safety Data Sheet

From: Mallinckrodt Baker, Inc.
222 Red School Lane
Phillipsburg, NJ 08865

MBI

24 Hour Emergency Telephone: 908-859-2151
CHEMTREC: 1-800-424-9300
National Response in Canada
CANUTEC: 613-996-6666
Outside U.S. And Canada
Chemtrec: 703-527-3887

NOTE: CHEMTREC, CANUTEC and National Response Center emergency numbers to be used only in the event of chemical emergencies involving a spill, leak, fire, exposure or accident involving chemicals.

All non-emergency questions should be directed to Customer Service (1-800-582-2537) for assistance.

BIPHENYL

1. Product Identification

Synonyms: Diphenol; 1,1'biphenyl; phenylbenzene
CAS No.: 92-52-4
Molecular Weight: 154.21
Chemical Formula: C12H10

2. Composition/Information on Ingredients

Ingredient	CAS No	Percent	Hazardous
Biphenyl	92-52-4	90 - 100%	Yes

3. Hazards Identification

Emergency Overview

WARNING! HARMFUL IF SWALLOWED, INHALED OR ABSORBED THROUGH SKIN. CAUSES IRRITATION TO SKIN, EYES AND RESPIRATORY TRACT. MAY AFFECT LIVER, CENTRAL AND PERIPHERAL NERVOUS SYSTEMS. MAY CAUSE ALLERGIC SKIN REACTION.

Potential Health Effects

Inhalation:
Inhalation of dust or vapors can irritate the mucous membranes and respiratory tract. Other symptoms may parallel those from ingestion exposure.
Ingestion:
Exerts toxic effects on the central nervous system and liver. Symptoms may include headache, diffuse gastro-intestinal pain, nausea, numbness, body aches, and general fatigue.
Skin Contact:
May cause irritation. May be absorbed through the skin with symptoms paralleling those from ingestion exposure. May cause allergic reaction in sensitive individuals.
Eye Contact:
Vapors and dust cause eye irritation.
Chronic Exposure:
Chronic exposure may cause peripheral nerve damage and liver injury.
Aggravation of Pre-existing Conditions:
No information found.

4. First Aid Measures

Inhalation:
Remove to fresh air. If not breathing, give artificial respiration. If breathing is difficult, give oxygen. Get medical attention.
Ingestion:
Induce vomiting immediately as directed by medical personnel. Never give anything by mouth to an unconscious person. Get medical attention.
Skin Contact:
Immediately flush skin with plenty of soap and water for at least 15 minutes while removing contaminated clothing and shoes. Get medical attention. Wash clothing before reuse. Thoroughly clean shoes before reuse.
Eye Contact:
Immediately flush eyes with plenty of water for at least 15 minutes, lifting lower and upper eyelids occasionally. Get medical attention immediately.

5. Fire Fighting Measures

Fire:
Flash point: 113C (235F) CC
Autoignition temperature: 540C (1004F)

Flammable limits in air % by volume:
lel: 0.6; uel: 5.8
Explosion:
Above the flash point, explosive vapor-air mixtures may be formed. Fine dust dispersed in air in sufficient concentrations, and in the presence of an ignition source is a potential dust explosion hazard.
Fire Extinguishing Media:
Water spray, dry chemical, alcohol foam, or carbon dioxide. Water or foam may cause frothing.
Special Information:
In the event of a fire, wear full protective clothing and NIOSH-approved self-contained breathing apparatus with full facepiece operated in the pressure demand or other positive pressure mode.

6. Accidental Release Measures

Remove all sources of ignition. Ventilate area of leak or spill. Wear appropriate personal protective equipment as specified in Section 8. Spills: Clean up spills in a manner that does not disperse dust into the air. Use non-sparking tools and equipment. Reduce airborne dust and prevent scattering by moistening with water. Pick up spill for recovery or disposal and place in a closed container. US Regulations (CERCLA) require reporting spills and releases to soil, water and air in excess of reportable quantities. The toll free number for the US Coast Guard National Response Center is (800) 424-8802.

7. Handling and Storage

Keep in a tightly closed container, stored in a cool, dry, ventilated area. Protect against physical damage. Isolate from incompatible substances. Containers of this material may be hazardous when empty since they retain product residues (dust, solids); observe all warnings and precautions listed for the product.

8. Exposure Controls/Personal Protection

Airborne Exposure Limits:
-OSHA Permissible Exposure Limit (PEL):
0.2 ppm (TWA).
-ACGIH Threshold Limit Value (TLV):
0.2 ppm (TWA)
Ventilation System:
A system of local and/or general exhaust is recommended to keep employee exposures below the Airborne Exposure Limits. Local exhaust ventilation is generally preferred because it can control the emissions of the contaminant at its source, preventing dispersion of it into the general work area. Please refer to the ACGIH document, *Industrial Ventilation, A Manual of Recommended Practices*, most recent edition, for details.
Personal Respirators (NIOSH Approved):
If the exposure limit is exceeded and engineering controls are not feasible, a half-face respirator with an organic vapor cartridge and particulate filter (NIOSH type N95 or better filter) may be worn for up to ten times the exposure limit or the maximum use concentration specified by the appropriate regulatory agency or respirator supplier, whichever is lowest. A full-face piece respirator with an organic vapor cartridge and particulate filter (NIOSH N 100 filter) may be worn up to 50 times the exposure limit, or the maximum use concentration specified by the appropriate regulatory agency or respirator supplier, whichever is lowest. If oil particles (e.g. lubricants, cutting fluids, glycerine, etc.) are present, use a NIOSH type R or P particulate filter. For emergencies or instances where the exposure levels are not known, use a full-face piece positive-pressure, air-supplied respirator. WARNING: Air-purifying respirators do not protect workers in oxygen-deficient atmospheres.
Skin Protection:
Wear impervious protective clothing, including boots, gloves, lab coat, apron or coveralls, as appropriate, to prevent skin contact.
Eye Protection:
Use chemical safety goggles and/or full face shield where dusting or splashing of solutions is possible. Maintain eye wash fountain and quick-drench facilities in work area.

9. Physical and Chemical Properties

Appearance:
White crystals.
Odor:
Pleasant, peculiar odor.
Solubility:
Insoluble in water.
Specific Gravity:
1.041
pH:
No information found.
% Volatiles by volume @ 21C (70F):
0
Boiling Point:
254 - 255C (489 - 491F)
Melting Point:
69 - 70C (156 - 158F)
Vapor Density (Air=1):
5.31
Vapor Pressure (mm Hg):
0.005 @ 20.4C (68F)
Evaporation Rate (BuAc=1):
No information found.

10. Stability and Reactivity

Stability:
Stable under ordinary conditions of use and storage.
Hazardous Decomposition Products:
Carbon dioxide and carbon monoxide may form when heated to decomposition.

Hazardous Polymerization:
Will not occur.
Incompatibilities:
Strong oxidizers.
Conditions to Avoid:
Heat, flame, ignition sources, dusting and incompatibles.

11. Toxicological Information

Toxicological Data:
Oral rat LD50 2400 mg/kg; Skin rabbit LD50: > 5010 mg/kg; Irritation (std Draize) rabbit: eye = 100 mg, mild. Investigated as a tumorigen and mutagen.
Carcinogenicity:
EPA / IRIS classification: Group D1 - Not classifiable as a human carcinogen.

--------\Cancer Lists\----------

Ingredient	---NTP Carcinogen--- Known	Anticipated	IARC Category
Biphenyl (92-52-4)	No	No	None

12. Ecological Information

Environmental Fate:
No information found.
Environmental Toxicity:
No information found.

13. Disposal Considerations

Whatever cannot be saved for recovery or recycling should be managed in an appropriate and approved waste disposal facility. Processing, use or contamination of this product may change the waste management options. State and local disposal regulations may differ from federal disposal regulations. Dispose of container and unused contents in accordance with federal, state and local requirements.

14. Transport Information

International (Water, I.M.O.)

Proper Shipping Name: ENVIRONMENTALLY HAZARDOUS SUBSTANCES, SOLID, N.O.S. (DIPHENYL)
Hazard Class: 9
UN/NA: UN3077
Packing Group: III
Information reported for product/size: 1KG

International (Air, I.C.A.O.)

Proper Shipping Name: ENVIRONMENTALLY HAZARDOUS SUBSTANCES, SOLID, N.O.S. (DIPHENYL)
Hazard Class: 9
UN/NA: UN3077
Packing Group: III
Information reported for product/size: 1KG

15. Regulatory Information

--------\Chemical Inventory Status - Part 1\----------

Ingredient	TSCA	EC	Japan	Australia
Biphenyl (92-52-4)	Yes	Yes	Yes	Yes

--------\Chemical Inventory Status - Part 2\----------

Ingredient	Korea	--Canada-- DSL	NDSL	Phil.
Biphenyl (92-52-4)	Yes	Yes	No	Yes

--------\Federal, State & International Regulations - Part 1\----------

Ingredient	-SARA 302- RQ	TPQ	------SARA 313------ List	Chemical Catg.
Biphenyl (92-52-4)	No	No	Yes	No

--------\Federal, State & International Regulations - Part 2\----------

Ingredient	CERCLA	-RCRA- 261.33	-TSCA- 8(d)
Biphenyl (92-52-4)	100	No	No

Chemical Weapons Convention: No TSCA 12(b): No CDTA: Yes
SARA 311/312: Acute: Yes Chronic: Yes Fire: No Pressure: No
Reactivity: No (Pure / Solid)

Australian Hazchem Code: None allocated.
Poison Schedule: None allocated.
WHMIS:
This MSDS has been prepared according to the hazard criteria of the Controlled Products Regulations (CPR) and the MSDS contains all of the information required by the CPR.

16. Other Information

NFPA Ratings: Health: **2** Flammability: **1** Reactivity: **0**
Label Hazard Warning:
WARNING! HARMFUL IF SWALLOWED, INHALED OR ABSORBED THROUGH SKIN. CAUSES IRRITATION TO SKIN, EYES AND RESPIRATORY TRACT. MAY AFFECT LIVER, CENTRAL AND PERIPHERAL NERVOUS SYSTEMS. MAY CAUSE ALLERGIC SKIN REACTION.
Label Precautions:
Avoid contact with eyes, skin and clothing.
Avoid breathing dust.
Keep container closed.
Use only with adequate ventilation.
Wash thoroughly after handling.
Label First Aid:
In case of contact, immediately flush eyes or skin with plenty of water for at least 15 minutes while removing contaminated clothing and shoes. Wash clothing before reuse. If inhaled, remove to fresh air. If not breathing, give artificial respiration. If breathing is difficult, give oxygen. If swallowed, induce vomiting immediately as directed by medical personnel. Never give anything by mouth to an unconscious person. In all cases, get medical attention.
Product Use:
Laboratory Reagent.
Revision Information:
MSDS Section(s) changed since last revision of document include: 8.
Disclaimer:
****
Mallinckrodt Baker, Inc. provides the information contained herein in good faith but makes no representation as to its comprehensiveness or accuracy. This document is intended only as a guide to the appropriate precautionary handling of the material by a properly trained person using this product. Individuals receiving the information must exercise their independent judgment in determining its appropriateness for a particular purpose. MALLINCKRODT BAKER, INC. MAKES NO REPRESENTATIONS OR WARRANTIES, EITHER EXPRESS OR IMPLIED, INCLUDING WITHOUT LIMITATION ANY WARRANTIES OF MERCHANTABILITY, FITNESS FOR A PARTICULAR PURPOSE WITH RESPECT TO THE INFORMATION SET FORTH HEREIN OR THE PRODUCT TO WHICH THE INFORMATION REFERS. ACCORDINGLY, MALLINCKRODT BAKER, INC. WILL NOT BE RESPONSIBLE FOR DAMAGES RESULTING FROM USE OF OR RELIANCE UPON THIS INFORMATION.
****
Prepared by: Environmental Health & Safety
Phone Number: (314) 654-1600 (U.S.A.)

Table C.4-6

CENSUS FINDINGS

Map ID	Tract Number	Total Population	Population in Radius	Total Area(sq.mi.)	Area in Radius(sq.mi.)
T1	0116.00	6151	505.2	1369.86	112.52

Table C.4-7 Three Highest MIR Locations and Risk Values

RECEPTORS WITH HIGHEST CANCER RISK

REC	TYPE	CANCER	CHRONIC	ACUTE	UTME	UTMN	ZONE
130	GRID	2.59E-07	2.08E-03	1.01E-02	469945	3874500	11
131	GRID	2.53E-07	1.68E-03	9.45E-03	469945	3874550	11
302	GRID	2.28E-07	1.53E-03	4.79E-03	473151	3873400	11

RECEPTORS WITH HIGHEST CHRONIC HI

REC	TYPE	CANCER	CHRONIC	ACUTE	UTME	UTMN	ZONE
130	GRID	2.59E-07	2.08E-03	1.01E-02	469945	3874500	11
131	GRID	2.53E-07	1.68E-03	9.45E-03	469945	3874550	11
302	GRID	2.28E-07	1.53E-03	4.79E-03	473151	3873400	11

RECEPTORS WITH HIGHEST ACUTE HI

REC	TYPE	CANCER	CHRONIC	ACUTE	UTME	UTMN	ZONE
130	GRID	2.59E-07	2.08E-03	1.01E-02	469945	3874500	11
113	GRID	1.23E-07	1.08E-03	1.01E-02	469919	3874450	11
112	GRID	1.68E-07	1.31E-03	9.86E-03	469919	3874500	11

Figure C.4-1
Census Tracts in Site Area

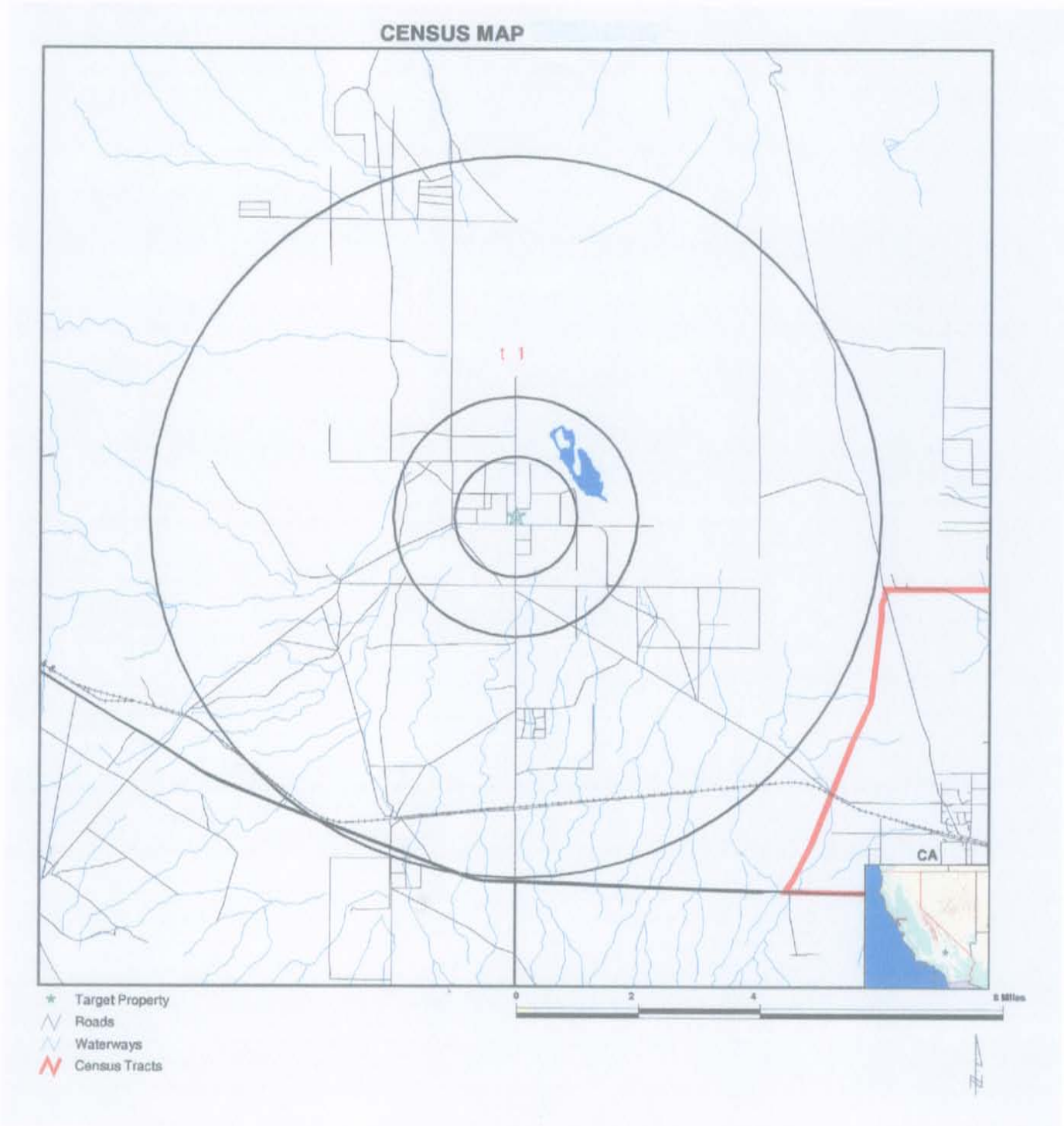

Figure C.4-2
6-Mile Radius Zone Map

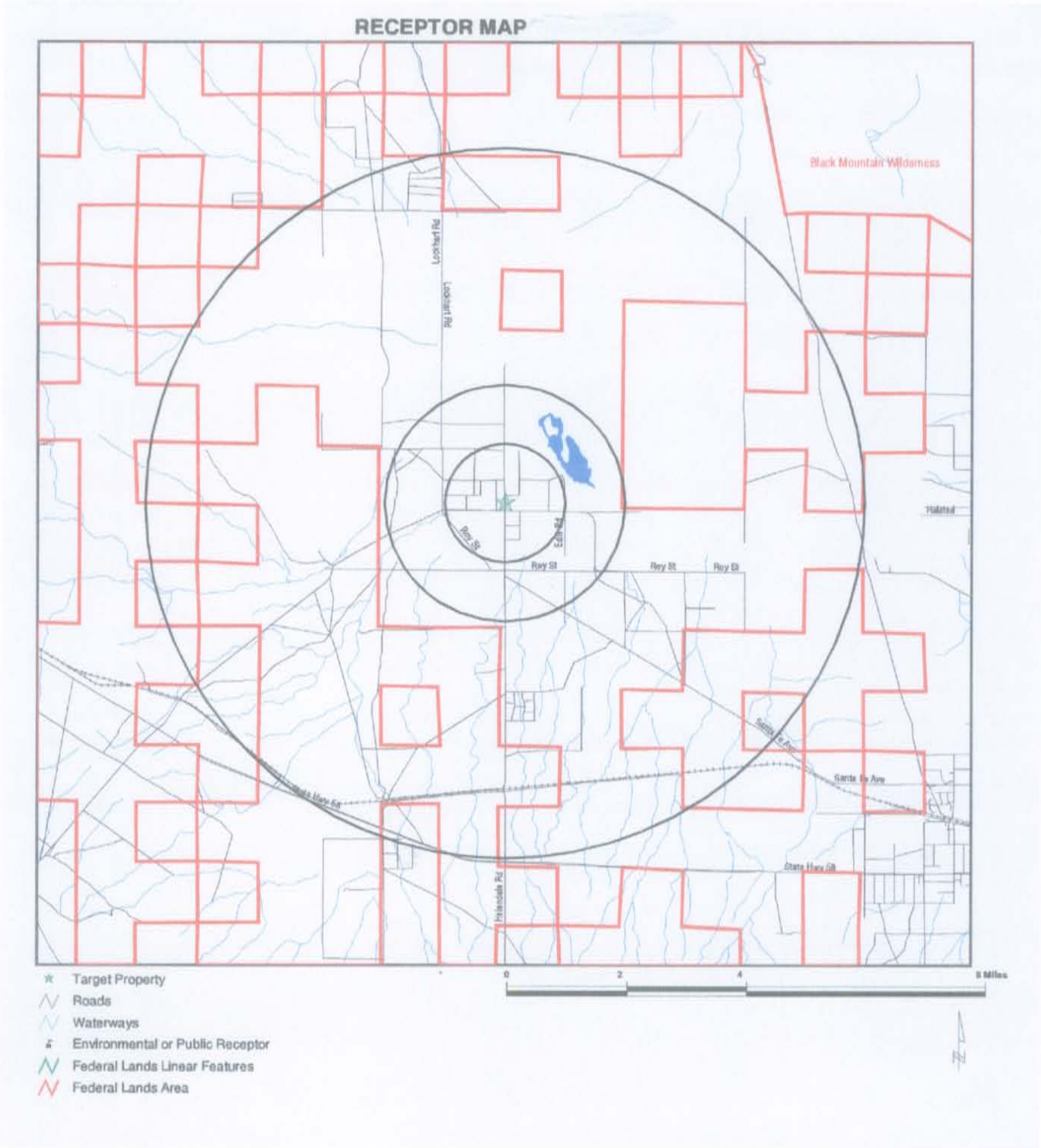

Figure C.4-3
3 Highest Cancer MIR Locations

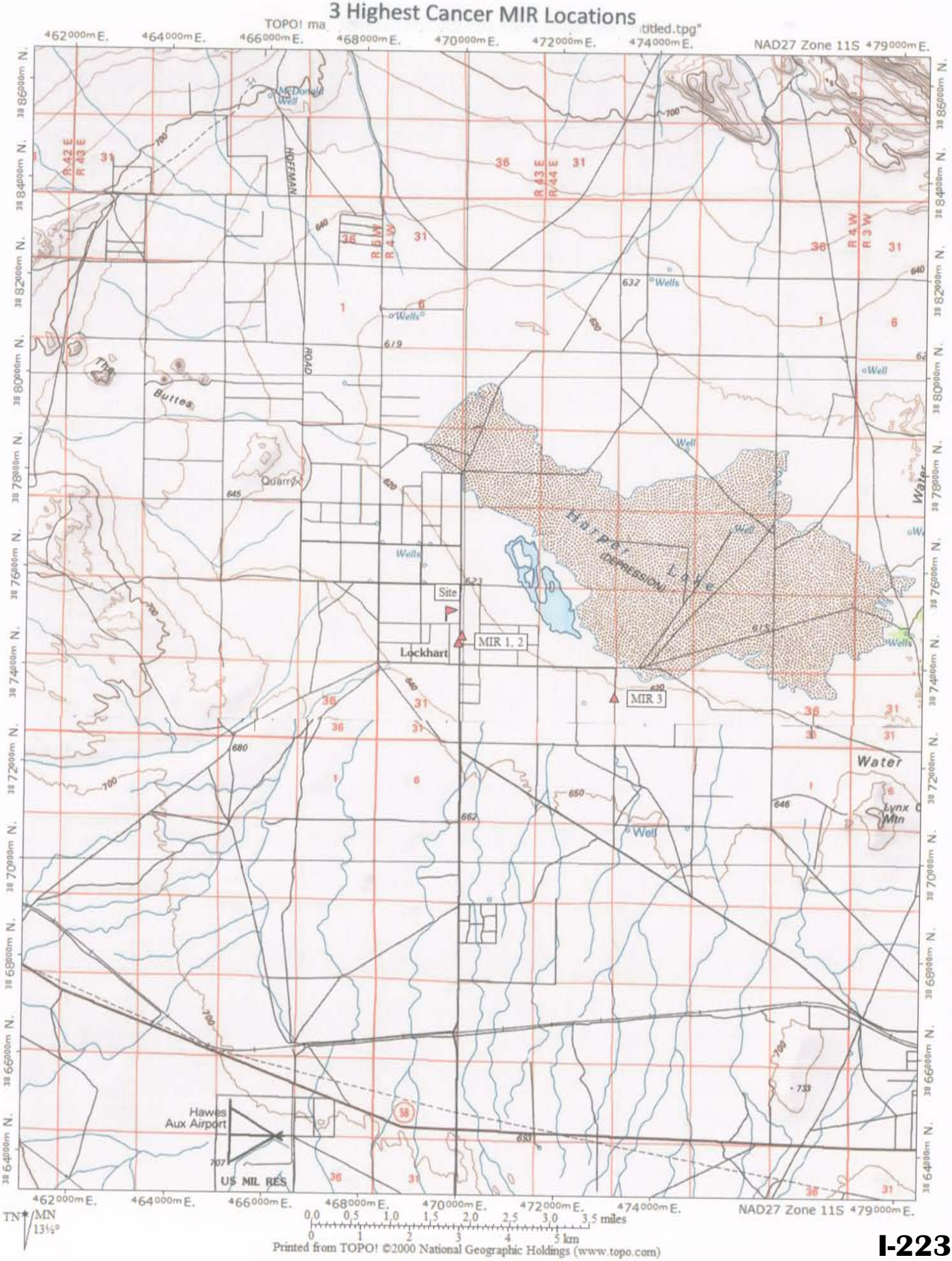

APPENDIX C.5

Construction Emissions and Impact Analysis

Construction Phases

Construction of MS1 is expected to last approximately 26 months. The construction will occur in the following four main phases:

- Site preparation;
- Foundation work;
- Construction/installation of major structures; and,
- Installation of major equipment.

Construction Schedule

The construction sequence for power plant construction includes the following general steps: (1) mobilization, (2) site preparation and grading, (3) foundation construction, (4) major equipment installation including the solar array field and offsite linears (if required), (5) balance of plant construction, (6) testing and commissioning.

The total site acreage is 1765 acres, with an additional 13 acres included in the site acreage to be disturbed during construction, bringing the total site acreage for purposes of construction to 1778 acres. The final site, i.e., acres inside the proposed fence line will be 1632 acres. The maximum acreage disturbed on any one day during constriction will be 160 acres. The site is essentially flat. As such, the site will require moderate grading and leveling prior to construction of the power blocks, support systems, solar array field, and site buildings. Site preparation includes finish grading, excavation of footings and foundations, and backfilling operations. After site preparation is finished, the construction of the foundations and structures is expected to begin. Once the foundations and structures are finished, installation and assembly of the mechanical and electrical equipment are scheduled to commence.

Fugitive dust emissions from the construction of MS1 will result from:

- Dust entrained during site preparation and finish grading/excavation at the construction site;
- Dust entrained during offsite travel on paved and unpaved surfaces;
- Dust entrained during aggregate and soil loading and unloading operations; and
- Wind erosion of areas disturbed during construction activities.

Combustion emissions during construction will result from:

- Exhaust from the Diesel construction equipment used for site preparation, grading, excavation, and construction of onsite structures;
- Exhaust from water trucks used to control construction dust emissions;
- Exhaust from Diesel-powered welding machines, electric generators, air compressors, and water pumps;

- Exhaust from pickup trucks and Diesel trucks used to transport workers and materials around the construction site;
- Exhaust from Diesel trucks used to deliver concrete, fuel, and construction supplies to the construction site; and,
- Exhaust from automobiles used by workers to commute to the construction site.

To determine the potential worst-case daily construction impacts, exhaust and dust emission rates have been evaluated for each source of emissions. Worst-case daily dust emissions are expected to occur during the first months of construction when site preparation occurs. The worst-case daily exhaust emissions are expected to occur during the middle of the construction schedule during the installation of the major mechanical equipment. Annual emissions are based on the average equipment mix and use rates during the construction period. Daily emissions are derived from the annual values using the estimated construction time frame.

Available Mitigation Measures

The following mitigation measures are proposed to control exhaust emissions from the Diesel heavy equipment used during construction of MS1:

- The applicant will have an on-site construction mitigation manager who will be responsible for the implementation and compliance of the construction mitigation program. The documentation of the ongoing implementation and compliance with the proposed construction mitigations will be provided on a periodic basis.

- All unpaved roads and disturbed areas in the project and laydown construction sites will be watered as frequently as necessary to control fugitive dust. The frequency of watering will be on a minimum schedule of four (4) times during the daily construction activity period. Watering may be reduced or eliminated during periods of precipitation.

- Onsite vehicle speeds will be limited to <15 miles per hour on unpaved areas within the project construction site.

- The construction site entrance(s) will be posted with visible speed limit signs.

- All construction equipment vehicle tires will be inspected and cleaned as necessary to be free of dirt prior to leaving the construction site via paved roadways.

- Gravel ramps will be provided at the tire cleaning area.

- All unpaved exits from the construction site will be graveled or treated to reduce track-out to public roadways.

- All construction vehicles will enter the construction site through the treated entrance roadways, unless an alternative route has been provided.

- Construction areas adjacent to any paved roadway will be provided with sandbags or other similar measures as specified in the construction Storm Water Pollution Prevention Plan (SWPPP) to prevent runoff to roadways.

- All paved roads within the construction site will be cleaned on a periodic basis (or less during periods of precipitation), to prevent the accumulation of dirt and debris.

- The first 500 feet of any public roadway exiting the construction site will be cleaned on a periodic basis (or less during periods of precipitation), using wet sweepers or air filtered dry vacuum sweepers, when construction activity occurs or on any day when dirt or runoff from the construction site is visible on the public roadways.

- Any soil storage piles and/or disturbed areas that remains inactive for longer than 10 days will be covered, or shall be treated with appropriate dust suppressant compounds.

- All vehicles that are used to transport solid bulk material on public roadways and that have the potential to cause visible emissions will be covered, or the materials shall be sufficiently wetted and loaded onto the trucks in a manner to minimize fugitive dust emissions. A minimum freeboard height of two (2) feet will be required on all bulk materials transport.

- Wind erosion control techniques (such as windbreaks, water, chemical dust suppressants, and/or vegetation) will be used on all construction areas that may be disturbed. Any windbreaks installed to comply with this condition will remain in place until the soil is stabilized or permanently covered with vegetation.

- Disturbed areas will be re-vegetated as soon as practical.

To mitigate exhaust emissions from construction equipment, the applicant is proposing the following:

- The applicant will work with the construction contractor to utilize to the extent feasible, EPA-ARB Tier 2/Tier 3 engine compliant equipment for equipment over 100 horsepower.

- Insure periodic maintenance and inspections per the manufacturers specifications.

- Reduce idling time through equipment and construction scheduling.

- Use California low sulfur diesel fuels (<=15 ppmw S).

Estimation of Emissions with Mitigation Measures

Tables C.5-1 through C.5-3 show the estimated average daily and annual onsite heavy equipment exhaust and fugitive dust emissions with recommended mitigation measures. Detailed emission calculations are included in Table C.5-5.

TABLE C.5-1 AVERAGE DAILY ONSITE EMISSIONS DURING CONSTRUCTION, POUNDS PER DAY

	NO_x	CO	VOC	SO_x	PM10/PM2.5
Construction Fugitive Dust	0	0	0	0	883.92/185.62
Equipment and Vehicle Exhaust	80.13	40.56	12.2	0.26	5.00/4.90
Total =	**80.13**	**40.6**	**12.2**	**0.26**	**888.92/190.52**

TABLE C.5-2 AVERAGE ANNUAL ONSITE EMISSIONS DURING CONSTRUCTION, TONS PER YEAR

	NO_x	CO	VOC	SO_x	PM10/PM2.5
Construction Fugitive Dust	0	0	0	0	30.5/6.4
Equipment and Vehicle Exhaust	7.9	4.1	1.23	0.034	0.5/0.5
Total =	**7.9**	**4.1**	**1.23**	**0.034**	**31.0/6.9**

TABLE C.5-3 ANNUAL ONSITE EMISSIONS DURING CONSTRUCTION, TONS PER CONSTRUCTION PERIOD (26 MONTHS)

	NO_x	CO	VOC	SO_x	PM10/PM2.5
Construction Fugitive Dust	0	0	0	0	66.1/13.9
Equipment and Vehicle Exhaust	17.2	8.8	2.7	0.074	1.1/1.1
Total =	**17.2**	**8.8**	**2.7**	**0.074**	**67.2/15.0**

Analysis of Ambient Impacts from Facility Construction

Ambient air quality impacts from emissions during the construction of MS1 were estimated using an air quality dispersion modeling analysis. The modeling analysis considers the construction site location, the surrounding topography, and the sources of emissions during construction, including vehicle and equipment exhaust emissions and fugitive dust.

Existing Ambient Levels

As with the modeling analysis of project operating impacts (Section 5.2), monitoring stations delineated in Section 5.2 were used to establish the ambient background levels for the construction impact modeling analysis. Table 5.2-15 showed the maximum concentrations of NO_x, SO_2, CO, PM2.5 and PM10 recorded for 2006 through 2008 at those monitoring stations.

Dispersion Model

As in the analysis of project operating impacts, the USEPA-approved model AERMOD (version 07026) was used to estimate ambient impacts from construction activities. A detailed discussion of the AERMOD model and the associated processing programs AERSURFACE, AERMET, and AERMAP is included in Section 5.2.

The emission sources for the construction site were grouped into two categories: exhaust emissions and dust emissions. Combustion equipment exhaust emissions were modeled as

twenty-four (24) 3.048 meter high point sources (exhaust parameters of 750 Kelvin, 64.681 m/s velocity, and 0.1524m diameter) placed at regular 150-meter intervals around a 160-acre construction area (conservatively assumed to be the 80-acre area of the alpha power block and extending to the east, and an equivalent 80-acre area across the public roadway extending from the property fenceline to the west). Construction fugitive dust emissions were modeled as area sources covering the 160-acre construction area described above with an effective height of 0.5 meters. Combustion emissions were assumed to occur for 20 hours/day (3 AM to 11 PM) while fugitive dust emissions were assumed to be continuous (24 hours/day). The construction impacts modeling analysis generally used the same modeling options, receptor locations and meteorological data as used for the project operating impact analysis. Since maximum impacts due to fugitive emissions from construction activities are expected to occur at or near the property boundary, only the 50-meter spaced downwash and fenceline receptor grids were used for modeling construction impacts. Also, to reduce run times for the area sources modeled for fugitive dust and the large number of point sources modeled for mobile combustion source equipment, the TOXICS keyword was used for modeling construction impacts. A detailed discussion of the receptor locations and meteorological data is included in Section 5.2.

To determine the construction impacts on short-term ambient standards (24 hours and less), the estimated worst-case daily onsite construction emission levels shown in Table C.5-1 were used. For pollutants with annual average ambient standards, the annual onsite emission levels shown in Table C.5-2 were used.

Modeling Results

Based on the emission rates of NO_x, SO_2, CO, PM2.5, and PM10, the modeling options, receptor grids, and meteorological data, AERMOD calculates short-term and annual ambient impacts for each pollutant. As mentioned above, the modeled 1-hour, 3-hour 8-hour, and 24-hour ambient impacts are based on the worst-case daily emission rates of NO_x, SO_2, CO, PM2.5, and PM10 spread over the estimated daily hours of operation. The annual impacts are based on the annual emission rates of these pollutants.

The annual average concentrations of NO_2 were computed following the revised USEPA guidance for computing these concentrations (August 9, 1995 Federal Register, 60 FR 40465). The annual average was calculated using the ambient ratio method (ARM) with the national default value of 0.75 for the annual average NO_2/NO_x ratio.

The modeling analysis results are shown in Table C.5-4. Also included in the table are the maximum background levels that have occurred in the last three years and the resulting total ambient impacts.

TABLE C.5-4 MODELED MAXIMUM CONSTRUCTION IMPACTS

Pollutant	Averaging Time	Maximum Construction Impacts (µg/m³)	Background (µg/m³)	Total Impact (µg/m³)	State Standard (µg/m³)	Federal Standard (µg/m³)
NO_2[a]	1-hour	12.5	154	166.5	339	-
	Annual	0.98	42	43.0	57	100
SO_2	1-hour	0.041	94	94	655	-
	3-hour	0.039	23	23	-	1300
	24-hour	0.016	13	13	105	365

	Annual	0.006	3	3	-	80
CO	1-hour 8-hour	6.3 3.9	4025 1789	4031 1793	23,000 10,000	40,000 10,000
PM10	24-hour Annual[b]	436 23.8	154 38.4	590 62.2	50 20	150 -
PM2.5	24-hour Annual[b]	92 5.0	28 10.4	120 15.4	- 12	35 15.0

Notes:
[a]ARM applied for annual average, using national default 0.75 ratio.
[b]Annual Arithmetic Mean.

AAQS are only exceeded for fugitive dust emissions (PM10 and PM2.5). It should be noted that modeled MS1 construction impacts are not unusual in comparison to modeled fugitive dust impacts for most construction sites; in practice, construction sites that use good dust suppression techniques and low-emitting vehicles typically would not be expected to cause exceedances of ambient air quality standards. The input and output modeling files are being provided electronically to the appropriate agencies.

Attachment - Detailed Emission Calculations

Table C.5-5 Construction Emissions Calculations

Table C.5-6 Construction Equipment Schedules

Table C.5-7 Offsite Equipment and Construction Manpower Schedules

Table C.5-8 MDAB EMFAC Output

Table C.5-9 EMFAC Composite EF Calculations

Table C.5-10 Construction Impact Summary

Table C.5-5 Construction Emission Totals

Construction Activity	lbs/day NOx	CO	VOC	SOx	PM10	PM2.5	tons per const period NOx	CO	VOC	SOx	PM10	PM2.5	tons per year NOx	CO	VOC	SOx	PM10	PM2.5
Main Site																		
Construction Equipment-Exhaust	79.9	38.0	12.0	0.1	5.00	4.90	17.1	8.1	2.60	0.10	1.06	1.05	7.89	3.74	1.20	0.05	0.49	0.48
Construction Site-Fugitive Dust	0.000	0.000	0.000	0.000	883.90	185.60	0.000	0.000	0.000	0.000	66.10	13.90	0.00	0.00	0.00	0.00	30.51	6.42
Construction Dust-Other	0.000	0.000	0.000	0.000	0.00	0.00	0.000	0.000	0.000	0.000	0.00	0.00	0.00	0.00	0.00	0.00	0.00	0.00
Site Delivery-Vehicle Exhaust	70.30	21.30	5.10	0.084	3.20	3.17	19.65	5.94	1.42	0.024	0.900	0.890	9.07	2.74	0.66	0.01	0.42	0.41
Site Support-Vehicle Exhaust	0.230	2.560	0.220	0.003	0.022	0.022	0.064	0.710	0.062	0.001	0.006	0.006	0.03	0.33	0.03	0.00	0.00	0.00
Worker Travel-Vehicle Exhaust	20.78	132.9	11.60	0.160	1.05	1.05	5.81	37.10	3.25	0.044	0.290	0.290	2.68	17.12	1.50	0.02	0.13	0.13
Track Out-Fugitive Dust	0.000	0.000	0.000	0.000	5.46	0.920	0.000	0.000	0.000	0.000	1.40	0.24	0.00	0.00	0.00	0.00	0.65	0.11
Unpaved Roads-Fugitive Dust	0.000	0.000	0.000	0.000	0.000	0.000	0.000	0.000	0.000	0.000	0.000	0.000	0.00	0.00	0.00	0.00	0.00	0.00
Paved Roads-Fugitive Dust	0.000	0.000	0.000	0.000	0.780	0.020	0.000	0.000	0.000	0.000	0.200	0.010	0.00	0.00	0.00	0.00	0.09	0.00
Offsite Linear Emissions are included in the above sector calculations, i.e., acreages, equipment types and use rates, schedules, etc.																		
TOTALS	**171.2**	**194.8**	**28.9**	**0.3**	**899.4**	**195.7**	**42.6**	**51.9**	**7.33**	**0.17**	**69.96**	**16.39**	**19.7**	**23.9**	**3.38**	**0.08**	**32.29**	**7.56**
Modeling Emissions	*80.13*	*40.56*	*12.22*	*0.10*	*888.92*	*190.52*	*17.16*	*8.81*	*2.66*	*0.10*	*67.17*	*14.96*	*7.92*	*4.07*	*1.23*	*0.05*	*31.00*	*6.90*

Total Const Months: 26
Total Const Years: 2.17

CONSTRUCTION EQUIPMENT EXHAUST EMISSIONS

Project: Mojave Solar One

Assumptions:

1. The average diesel engine employed in construction equipment use consumes fuel at a rate of: 0.06 gal/hp-hr
Ref: EPA, NR-009b Publication, November 2002.
Ref: Sacramento County APCD Const. Program Data, V. 6.0.3, 3/2007.
Ref: EPA, NR-009c Publication, EPA 420-P-04-009, April 2004.
Ref: Niland Energy Project, IID, AFC Vol 2, App A.
Ref: South Coast AQMD PR XXI, Draft Staff Report, 3-15-95, and SCAQMD CEQA Manual, 11/03.
The above noted references present fuel consumption values which range from 0.050 to 0.064 gal/hp-hr for diesel engines used in construction related equipment. The value of 0.060 gal/hp-hr was chosen as a reasonable upper mid-range value for construction emissions calculations.

2. Construction equipment exhaust emissions will be calculated on an annual basis using the site specific equipment list, HP ratings, hours of use, days of use, etc. Annual emissions will be apportioned to daily values based on the estimated construction period time on site.

3. The equipment list derived from the South Coast AQMD (12/2006) will be used to establish the various equipment categories. Data produced by the Sacramento APCD was used to establish the average HP ratings for each equipment category. HP rating data was supplemented by data from SCAQMD CEQA Handbook (Table A9-8-C) if not available from Sacramento APCD.

4. Construction Schedule:	20	hrs/day	Construction Totals:	430	hrs/month
	5	days/week		11180	hrs/const period
	21.5	days/month		559	days/const period
	26	months			

5. Anticipated Construction Start Year: 2010

Project supplied equipment list and use rates were consolidated into the following categories:
See Tables C.5-6 and C.5-7 for estimated HP values, use rates, etc.

Equipment Category	Avg HP	# of Units Used for Project	Avg Use Rate Hrs/day	# of Days On Site (each)	Total Hrs/Day	Total Hp-Hrs per Day	Total Hrs per Const Period	Total Hp-Hrs per Const Period
Bore/Drill Rigs/Pile Drivers	0	0	0	0	0	0	0	12000
Cement Mixers	0	0	0	0	0	0	0	448672
Industrial/Concrete Saws	0	0	0	0	0	0	0	0
Cranes	0	0	0	0	0	0	0	545600
Crawler Tractors/Dozers	0	0	0	0	0	0	0	0
Crushing/Processing Eq.	0	0	0	0	0	0	0	0
Dump and Tender Trucks	0	0	0	0	0	0	0	370800
Excavators	0	0	0	0	0	0	0	0
Forklifts/Aerial Lifts/Booms	0	0	0	0	0	0	0	2208500
Generators/Compressors	0	0	0	0	0	0	0	327200
Graders	0	0	0	0	0	0	0	1203460
Off Highway Tractors	0	0	0	0	0	0	0	434000
Off Highway Trucks	0	0	0	0	0	0	0	14500
Other Const. Eq.-Diesel	0	0	0	0	0	0	0	7450
Pavers	0	0	0	0	0	0	0	5000
Paving Eq./Surfacing Eq.	0	0	0	0	0	0	0	0
Plate Compactors	0	0	0	0	0	0	0	1236
Rollers/Compactors	0	0	0	0	0	0	0	0
Rough Terrain Forklifts	0	0	0	0	0	0	0	0
Rubber Tired Dozers	0	0	0	0	0	0	0	0
Rubber Tired Loaders	0	0	0	0	0	0	0	0
Scrapers	0	0	0	0	0	0	0	0
Signal Boards/Light Sets	0	0	0	0	0	0	0	0
Skid Steer Loaders	0	0	0	0	0	0	0	0
Tractors/Loaders/Backhoes	0	0	0	0	0	0	0	0
Trenchers	0	0	0	0	0	0	0	0
Welders	0	0	0	0	0	0	0	369250
Other Const. Eq.-Gasoline	0	0	0	0	0	0	0	20400

*includes equipment and use rates for proposed offsite linears.

Estimated Const Period Hp-Hrs 5968068

Estimated Const Period Fuel Use 358084 gals

Equip. Type	HP	lbs/hp-hr CO	lbs/hp-hr VOC	lbs/hp-hr NOx	lbs/hp-hr SOx	lbs/hp-hr PM10
		2010 Equipment Emissions Factors				
Bore/Drill Rigs/Pile Drivers	0	0.001400	0.000400	0.004700	0.000008	0.000200
Cement Mixers	0	0.003800	0.001400	0.006500	0.000009	0.000400
Industrial/Concrete Saws	0	0.006400	0.002500	0.006100	0.000008	0.000600
Cranes	0	0.001400	0.000500	0.004900	0.000005	0.000200
Crawler Tractors/Dozers	0	0.004300	0.001100	0.008500	0.000008	0.000500
Crushing/Processing Eq.	0	0.002500	0.000900	0.010200	0.000011	0.000300
Dump and Tender Trucks	0	0.001300	0.000400	0.002600	0.000004	0.000100
Excavators	0	0.003800	0.000800	0.006400	0.000007	0.000400
Forklifts/Aerial Lifts/Booms	0	0.002100	0.000600	0.003800	0.000004	0.000300
Generators/Compressors	0	0.005800	0.002200	0.006100	0.000008	0.000600
Graders	0	0.002000	0.000700	0.007200	0.000008	0.000300
Off Highway Tractors	0	0.004900	0.001300	0.010100	0.000008	0.000600
Off Highway Trucks	0	0.001500	0.000500	0.004600	0.000005	0.000200
Other Const. Eq.-Diesel	0	0.005900	0.002100	0.005600	0.000007	0.000500
Pavers	0	0.004400	0.001400	0.008100	0.000007	0.000700
Paving Eq./Surfacing Eq.	0	0.006600	0.002800	0.005300	0.000006	0.000600
Plate Compactors	0	0.001800	0.000300	0.002100	0.000004	0.000100
Rollers/Compactors	0	0.003500	0.001000	0.006200	0.000006	0.000500
Rough Terrain Forklifts	0	0.004200	0.000900	0.007400	0.000008	0.000400
Rubber Tired Dozers	0	0.003500	0.000700	0.006400	0.000005	0.000300
Rubber Tired Loaders	0	0.003600	0.000800	0.006600	0.000007	0.000400
Scrapers	0	0.002900	0.001000	0.009900	0.000009	0.000400
Signal Boards/Light Sets	0	0.002500	0.000500	0.003000	0.000006	0.000100
Skid Steer Loaders	0	0.005000	0.001600	0.004900	0.000007	0.000400
Tractors/Loaders/Backhoes	0	0.003000	0.000800	0.004700	0.000005	0.000400
Trenchers	0	0.004000	0.001300	0.007600	0.000006	0.000600
Welders	0	0.002300	0.000700	0.004100	0.000004	0.000400
Other Const. Eq.-Gasoline	0.0	0.003300	0.000900	0.006500	0.000006	0.000400

SCAQMD off-road emissions factor database, website, 12/2006. Load factor adjustments incorporated.
EFs are for equipment inventory year 2010.

Construction Period Emissions, lbs

Equip. Type	CO	VOC	NOx	SOx	PM10
Bore/Drill Rigs/Pile Drivers	17	5	56	0	2
Cement Mixers	1705	628	2916	4	179
Industrial/Concrete Saws	0	0	0	0	0
Cranes	764	273	2673	3	109
Crawler Tractors/Dozers	0	0	0	0	0
Crushing/Processing Eq.	0	0	0	0	0
Dump and Tender Trucks	482	148	964	1	37
Excavators	0	0	0	0	0
Forklifts/Aerial Lifts/Booms	4638	1325	8392	9	663
Generators/Compressors	1898	720	1996	3	196
Graders	2407	842	8665	10	361
Off Highway Tractors	2127	564	4383	3	260
Off Highway Trucks	22	7	67	0	3
Other Const. Eq.-Diesel	44	16	42	0	4
Pavers	22	7	41	0	4
Paving Eq./Surfacing Eq.	0	0	0	0	0
Plate Compactors	2	0	3	0	0
Rollers/Compactors	0	0	0	0	0
Rough Terrain Forklifts	0	0	0	0	0
Rubber Tired Dozers	0	0	0	0	0
Rubber Tired Loaders	0	0	0	0	0
Scrapers	0	0	0	0	0
Signal Boards/Light Sets	0	0	0	0	0
Skid Steer Loaders	0	0	0	0	0
Tractors/Loaders/Backhoes	0	0	0	0	0
Trenchers	0	0	0	0	0
Welders	849	258	1514	1	148
Other Const. Eq.-Gasoline	1219	332	2400	2	148

Totals	CO	VOC	NOx	SOx	PM10	PM2.5	
lbs per const. period	16194	5127	34112	37	2114	2095.00	
tons per const. period	8.1	2.6	17.1	0.0	1.06	1.05	
Average lbs/day =	29.0	9.2	61.0	0.07	3.78	3.75	
Estimated Maximum lbs/day =	*38.0*	*12.0*	*79.9*	*0.1*	*5.0*	*4.9*	*note 3*
Average lbs/month =	622.9	197.2	1312.0	1.4	81.31	80.58	
Average tons/year =	3.74	1.18	7.87	0.01	0.49	0.48	

CARB-CEIDARS, Updated Size Fractions for PM Profiles: PM2.5 = 0.991 of PM10 : Diesel Vehicle Exhaust
CO2 EF: CCAR General Protocol, June 2006, for CA-Low Sulfur Diesel combustion.

	CO2
lbs per const period	7863526
tons per const period	3932

Other Assumptions and References:

1. Trench construction times per: Southern Regional Water Pipeline Alliance, 3/08.
   Optimum trench construction progress rate is 80m (260ft) per day.
   Non-optimum trench construction progress rate is 30m (100 ft) per day.
   An average progress of 180 ft/day is used where applicable.
2. Paving speeds can range from 3 to 15 m/min depending on asphalt delivery rates and required compaction thickness.
   A minium paving speed of 3 m/min (10 ft/min or 600 ft/hr) I used where applicable.
   The minimum speed is based upon a 3" compacted layer, 12 ft lane width, with an asphalt delivery rate of ~140 tons/hr.
   Ref: Asphalt Paving Speed, Pavement Worktip No. 31, AAPA, 11/2001.
3. Estimation of maximum daily emissions is extremely variable. Some projects provide estimated manpower and equipment use schedules, but even this data usually leads to a wide range of assumptions being made in order to estimate equipment exhaust emissions for a maximum work day. The methodology used in this analysis assumes that the estimated maximum day represents the ratio of the number of pieces of equipment on site on any day during the maximum month as compared to the number of pieces of equipment on site on any day during an average month.

CONSTRUCTION PHASE-Main Project Site Fugitive Dust Emissions
MRI Level 2 Analysis

Acres Subject to Construction Disturbance Activites:		1778	
Max Acres Subject to Construction Disturbance Activites on any day:		160	***
Emissions Factor for PM10 Uncontrolled, tons/acre/month:		0.0144	
PM2.5 fraction of PM10 (per CARB CEIDARS Profiles):		0.21	
Activity Levels:	Hrs/Day:	20	
	Days/Wk:	6	
	Days/Month:	21.5	
	Const Period, Months:	26	2.2 years
	Const Period, Days:	559	
Wet Season Adjustment (Per AP-42, Section 13.2.2, Figure 13.2.2-1, 12/03)			
	Mean # days/year with rain > = 0.01 inch:	30	
	Mean # months/yr with rain > = 0.01 inch:	1	
	Adjusted Const Period, Months:	23.83	
	Adjusted Const Period, Days:	494	
Controls for Fugitive Dust:			
	Proposed watering schedule is eve	3.2	Hours

SCAQMD Mitigation Measures, Table XI-A, 4/07
3.2 hour watering interval yields 61% control of PM10/PM2.5
Speed control of onsite const traffic to < =15 mph = 44% control

Calculated % control based on mitigations propose	78	% control
Conservative control % used for emissions estimate	78	% control
	0.22	release fraction

Emissions: Controlled	PM10	PM2.5
tons/month	0.507	0.106
tons/period	12.081	2.537
Max lbs/day	47.2	9.902

Cut and Fill Data:

Total cu/yds:		4158000	***
10^3 cu/yds:		4158	
MRI PM10 emissions factor, tons/1000 cu.yds:		0.059	
PM10 uncontrolled emissions, tons/period:		245.32	
Cut and Fill Activity Period, months:		6.0	
Cut and Fill Activity Period, days:		129.0	
PM10 Controlled Emissions:	tons/period	53.97	
PM2.5 Controlled Emisisons:	tons/period	11.33	
PM10 Controlled Emissions:	tons/month	9.00	
PM2.5 Controlled Emisisons:	tons/month	1.89	
PM10 Controlled Emissions:	max lbs/day	836.8	
PM2.5 Controlled Emisisons:	max lbs/day	175.7	

Emissions Totals:		**PM10**	**PM2.5**
	tons/period	**66.1**	**13.9**
	tons/month	**9.5**	**2.0**
	max lbs/day	**883.9**	**185.6**

Ref: MRI Report, South Coast AQMD Project No. 95040, March 1996, Level 2 Analysis Procedure.
MRI Report factor of 0.011 tons/acre/month is based on 168 hours per month of const activity.
For an activity rate of 220 hrs/month, the adjusted EF would be 0.0144 tons/acre/month.
*** includes surface area and trench cut and fill for proposed offsite linears.

PAVED ROAD FUGITIVE DUST EMISSIONS
(associated with construction traffic)

Length of Paved Road used for/by Construction Access		1	miles, roundtrip distance***
Avg weight of vehicular equipment on road:		10.9	tons (range 2 - 42 tons)
Road surface silt loading factor:		0.06	g/m2 (range 0.03 - 400 g/m2)
Particle size multiplier factors:	PM10	0.016	lb/VMT
	PM2.5	0.0024	lb/VMT
C factors (brake and tire wear):	PM10	0.00047	lb/VMT
	PM2.5	0.00036	lb/VMT
Avg vehicle speed on road:		25	mph (range 10-55 mph)
Number of vehicles per day:		349	
Number of construction work days per month:		21.5	
Total vehicles per n		7503.5	
Number of construction work months:		23.83	after wet season adjustment*
Total vehicles per const per:		178808.4	

VMT/day: 349
VMT/montl 7503.5
VMT/perioc 178808.4

	PM10	PM2.5	
Calc 1	0.060	0.060	
Calc 2	2.807	2.807	
Calc 3	0.002	0.0000	lb/VMT

Emissions	PM10	PM2.5
lbs/day	0.78	0.02
lbs/month	16.86	0.36
lbs/period	401.75	8.50
tons/period	0.20	0.00

* see main const dust site page for this value
EPA, AP-42, Section 13.2.1, March 2006, updated 9/2008.

*** Note: fugitive roadway emissions from construction traffic are based on the use of a 0.5 mile section of Harper Lake Rd. (paved). Harper Lake Rd extends from Hwy 58 to the site entrance, and is used by a numb entities. Allocation of emissions from the project traffic will be based on a 1 mile roundtrip adjacent to the project site.

CONSTRUCTION PHASE - Truck Delivery and Site Support Vehicle Emissions

Ref: MDAB, Emfac 2007, V2.3, Nov 2006
On-Road Heavy Duty Diesels (1966-2010)
On Road Medium Duty Gas (1996-2010)

Delivery Vehicle Use Rates										
		Emissions Factors (lbs/vmt)								
		NOx	CO	VOC	SOx	PM10	CO2			
Const Days per Period:	559	0.03422	0.009532	0.002411	0.00004	0.001556	4.04823	Diesel		
Const Period VMT Diesel:	1143800	0.00202	0.01296	0.001125	0.000015	0.000098	1.4488	MD Gas		
Avg Daily Diesel VMT:	2046			Daily Emissions (lbs)						
Const Period VMT Gasoline:	75680	**NOx**	**CO**	**VOC**	**SOx**	**PM10**	**CO2**	**PM2.5**		
Avg Daily Gasoline VMT:	135	**70.019**	**19.504**	**4.933**	**0.082**	**3.184**	**8283.301**	**3.155**	Diesel	
		0.273	1.755	0.152	0.002	0.013	196.145	0.013	MD Gas	
			Tons per Const Period							
		19.570	5.451	1.379	0.023	0.890	2315.183	0.882	Diesel	
		0.076	0.490	0.043	0.001	0.004	54.823	0.004	MD Gas	

Site Support Vehicle Use Rates										
Gasoline Vehicle VMT Period	161945	**NOx**	**CO**	**VOC**	**SOx**	**PM10**	**CO2**			**PM2.5**
Avg Daily Gasoline VMT:	290	0.000791	0.008821	0.000769	0.000009	0.000075	0.825741	lbs/vmt*	gasoline	
Diesel Vehicle VMT Period:	132075	0.000006	0.000003	0.000001	0.000001	0.000001	0.001446	lbs/vmt*	diesel	
Avg Daily Diesel VMT:	236	**0.2292**	**2.5555**	**0.2228**	**0.0026**	**0.0217**	**239.2212**	**lbs/day**	**gasoline**	**0.0217**
		0.0014	**0.0007**	**0.0002**	**0.0002**	**0.0002**	**0.3416**	**lbs/day**	**diesel**	**0.0002**
		0.0640	0.7143	0.0623	0.0007	0.0061	66.8623	**tons/period**	**gasoline**	0.0061
		0.0004	0.0002	0.0001	0.0001	0.0001	0.0955	**tons/period**	**diesel**	0.0001

Ref: MDAB, Emfac 2007, V2.3, Nov 2006
LDPs (gas and diesel), 1966-2010

Avg haul distance: to the site from BNSF Barstow railyard and immediate supply area.

VMT totals include other site support VMT from Tables 5.2E-6 and 5.2E-7.

CARB-CEIDARS, Updated Fractions for PM Profiles: PM2.5 = 0.991 of PM10 for Diesel Exhaust, and 0.998 for Gasoline Vehicles.

It should be noted that these emissions are not necessarily new emissions to the regional air shed. A significant portion of the truck services will be derived from the existing regional truck services vehicle pool, and as such these truck emissions would most likely be involved in deliveries in the area regardless of whether or not the proposed facility is constructed. As such, a major portion of the above estimated emissions would not be considered as additions to the air shed.

CONSTRUCTION PHASE - Worker Travel - Emissions

Ref: MDAB, Emfac 2007, V2.3, Nov 2C
On Road Vehicles (1966-2010)
LDP/LDT Weighted Avg Efs

Max # of Workers/Day:	1162	
Avg # of Workers/Day:	830	
Avg Occupancy/Vehicle:	1.2	
Round Trips/Day:	214	
Avg Roundtrip Distance:	52	miles
VMT/Day:	11106	
VMT/Const Period:	6208254	
Total Const Days:	559	

Emissions Factors (lbs/VMT)

NOx	CO	VOC	SOx	PM10	CO2
0.00111	0.01108	0.00092	0.00001	0.00009	0.91102

Avg. Daily Emissions (lbs)

NOx	CO	VOC	SOx	PM10		PM2.5
12.328	**123.054**	**10.218**	**0.111**	**1.000**	**10117.788**	**0.998**

Tons per Const Period

3.4456	**34.3937**	**2.8558**	**0.0310**	**0.2794**	**2827.9218**	**0.2788**

Total Bus VMT/Const Period:	341171
Avg Bus VMT/Const Day:	610

Ref: MDAB, Emfac 2007, V2.3, Nov 2C
On Road Vehicles (1966-2010)
Bus Carriers

Emissions Factors (lbs/VMT)

NOx	CO	VOC	SOx	PM10	CO2
0.013846	0.016154	0.002308	0.000077	0.000077	3.846

Avg. Daily Emissions (lbs)

NOx	CO	VOC	SOx	PM10	CO2	PM2.5
8.451	9.859	1.409	0.047	0.047	2347.305	0.047

Tons per Const Period

2.362	2.756	0.394	0.013	0.013	656.072	0.013

It should be noted that these emissions are not necessarily new emissions to the regional air shed. A significant portion of the workers will be derived from the existing work force pool in the urban regional area, and as such these workers would most likely be involved in projects in the area regardless of whether or not the proposed facility is constructed. As such, a major portion of the above estimated emissions would not be considered as additions to the air shed.

CONSTRUCTION PHASE - Trackout Emissions

Paved Road Length (miles):	0.1	estimated roundtrip trackout distance			
Daily # of Vehicles:	349				
Avg Vehicle Weight (tons):	10.9		PM10	PM2.5*	
Total Unadjusted VMT/day	34.9		0.207		
Particle Size Multipliers	PM10		2.807		
lb/VMT	0.023		0.001	0.0002	lb/VMT
C factor, lb/VMT	0.00047		**5.457**	0.9223	**lbs/day**
Road Sfc Silt Loading (g/m^2):	0.28		**0.059**	0.0099	**tons/month**
# of Active Trackout Points:	2		**1.40**	0.2363	**tons/period**
Added Trackout Miles:	PM10				
Trackout VMT/day:	4188		*Default Silt Load Values for Paved Road Types*		
Final Adjusted VMT/day	4223		Freeway	0.02 g/m2	
Final Adjusted VMT/month	90792		Arterial	0.036 g/m2	
Final Adjusted VMT/period	2163582		Collector	0.036 g/m2	
Construction days/month:	21.5		Local	0.28 g/m2	
Construction months/period:	23.8		Rural	1.6 g/m2	
Control Applied to Trackout:	Sweeping and Cleaning (Water washing)				
Control Efficiency, %	90	0.9	Release Factor =	0.1	

* PM2.5 fraction of PM10 assumed to be 0.169 (CARB CEIDARS updated fraction values) for paved roads.

EPA, AP-42, Section 13.2.1, Proposed revisions dated 9/2008.
Use silt loading factor from default values for road type if no site specific data is available.
Trackout effects approximately 260 ft of roadway arriving and departing from the site access point.
See the mileage note on the paved road calculation sheet.

CO2e Emissions Estimates

Total CO2 emisisons from diesel combustion:	6970	tons/period
Total CO2 emissions from gasoline combustion:	2883	tons/period

Approximate methane fraction of CO2 for diesel combustion:	0.000051
Approximate N2O fraction of CO2 for diesel combustion:	0.000032
Approximate methane fraction of CO2 for gasoline combustion:	0.000213
Approximate N2O fraction of CO2 for gasoline combustion:	0.000113

Estimated methane from diesel combustion:	0.35547	tons/period
Estimated N2O from diesel combustion:	0.22304	tons/period
Estimated methane from gasoline combustion:	0.614079	tons/period
Estimated N2O from diesel combustion:	0.325779	tons/period

Estimated methane CO2e from diesel combustion:	7.46487	tons/period
Estimated N2O CO2e from diesel combustion:	69.1424	tons/period
Estimated methane CO2e from gasoline combustion:	12.89566	tons/period
Estimated N2O CO2e from gasoline combustion:	100.9915	tons/period

Total CO2e emissions from construction	**10043**	**tons/period**
	9039	***metric tons/period***

CCAR General Protocol, June 2006, Version 2.1.
IPCC SAR values for methane and N2O.

Average Vehicle Weight Estimate for Construction Period

Vehicle Type	Weight tons	# Vehicles per day	Frac. of total vehicles
Passenger Cars	2	214	0.613
LD Pickups	3	17	0.049
MD Pickups	4	4	0.011
HD Loaded*	40	51	0.146
HD Unloaded*	20	51	0.146
Buses	20	12	0.034
		349	0.966

Weighted Avg Vehicle Weight, tons : 10.9

* Ref: Liberty Energy XXIII DEIR, City of Banning, CA., Aspen Environmental Group, June 2

Table C.5-6
Estimated Construction Equipment Identification and Use Rates

EQUIPMENT DESCRIPTION			HP	FUEL TYPE	USAGE DESCRIPTION	
TRUCK	PICKUP	.5 TONS- 4 X 2	190	Gas	Grading Supervisors / Grade Checkers	(1) Superintendent or (1) Grade Checker
TRUCK	FUEL/LUBE	6 Tons - 4X2	250	Diesel	Fueling / Maintenance of Grading Equipment	(1) Mechanic's Helper
TRUCK	PICKUP	1.0 TONS- 4 X 4	200	Diesel	Grading Maintenance/Mechanics	(1) Mechanic and (1) Mechanic's Helper
14 M MOTOR GRADER	GRADING EQUIPMENT	47,133 LB	259	Diesel	Earth Moving	(1) Heavy Equipment Operator
623G SCRAPER	GRADING EQUIPMENT	23 CY	330	Diesel	Earth Moving	(1) Heavy Equipment Operator
657G SCRAPER	GRADING EQUIPMENT	44 CY	487	Diesel	Earth Moving	(1) Heavy Equipment Operator
825 H COMPACTOR	GRADING EQUIPMENT	72,164 LB	354	Diesel	Earth Moving	(1) Heavy Equipment Operator
631 WATER PULL (10K)	GRADING EQUIPMENT	10,000 GALLON	425	Diesel	Earth Moving	(1) Heavy Equipment Operator
D6 DOZERS	GRADING EQUIPMENT	44,418 LB	200	Diesel	Earth Moving	(1) Heavy Equipment Operator
414E INDUSTRIAL LOADER	GRADING EQUIPMENT	1 CY	89	Diesel	Site clean-up / Maintenance	(1) Heavy Equipment Operator
WATER TRUCK	GRADING EQUIPMENT	4,000 GALLON	300	Diesel	Site clean-up / Maintenance	(1) Heavy Equipment Operator
TRUCK	DUMP TRUCK	6 CY	250	Diesel	Site clean-up / Maintenance	(1) Heavy Equipment Operator
AUTO	CAR 4-DOOR	STANDARD	190	Gas	Administrative and personnel vehicle for site usage	
TRUCK	PICKUP	.5 TONS- 4 X 2	190	Gas	General construction usage vehicle	
TRUCK	PICKUP	.75 TONS- 4 X 2	190	Gas	General construction usage vehicle	
TRUCK	PICKUP	.75 TONS- 4 X 4	200	Diesel	General construction usage vehicle	
TRUCK	PICKUP - CREW CAB	.75 TONS- 4 X 4	200	Diesel	General construction usage vehicle	
TRUCK	PICKUP	1.0 TONS- 4 X 4	200	Diesel	General construction usage vehicle	
TRUCK	FLATBED	2 TONS- 4 X 2	200	Diesel	On-site material hauling	
TRUCK	FLATBED	6 TONS- 4 X 2	200	Diesel	On-site material hauling	
TRUCK	FLATBED	15 TONS- 4 X 2	200	Diesel	On-site material hauling	
TRUCK	FLATBED	30 TONS- 6 X 4	250	Diesel	On-site material hauling	
TRUCK	A-FRAME	4 X 4	200	Gas	On-site material hauling	
TRUCK	LUBE/GREASE		250	Diesel	Lube/grease truck for on-site construction vehicle maintenance	
TRUCK	CHERRY PICKER	NON-INSULATED	185	Diesel	Small crane for light duty lifting	
TRUCK	DUMP TRUCK	6 CY	250	Diesel	On-site material hauling	
TRUCK	DUMP TRUCK	12 CY	300	Diesel	On-site material hauling	
TRUCK	DUMP TRUCK	20 CY	300	Diesel	On-site material hauling	
TRACTOR	TRUCK TRACTOR	30 TONS 6X4	100	Diesel	Trailer pulling and general construction usage	
TRACTOR	TRUCK TRACTOR	60 TONS 6X4	100	Diesel	Trailer pulling and general construction usage	
TRACTOR	WHEEL, W/TOW HITCH	50 HP	50	Diesel	Trailer pulling and general construction usage	
CRANE	TELESCOPIC JIB, SELF	PROP. 5 TONS	185	Diesel	Small crane for light duty lifting	
CRANE	TELESCOPIC JIB, SELF	PROP. 10 TONS	185	Diesel	Small crane for light duty lifting	
CRANE	TELESCOPIC JIB, SELF	PROP. 15 TONS	185	Diesel	Small crane for light duty lifting	
CRANE	TELESCOPIC JIB	TRUCK - 20 TONS	220	Diesel	Small crane for medium duty lifting	
CRANE	TELESCOPIC JIB	TRUCK - 25 TONS	220	Diesel	Small crane for medium duty lifting	
CRANE	TELESCOPIC JIB	TRUCK - 30 TONS	220	Diesel	Small crane for medium duty lifting	
CRANE	TELESCOPIC JIB	TRUCK - 70 TONS	220	Diesel	Small crane for medium duty lifting	
CRANE	FIXED JIB, CRAWLER	20 TONS	220	Diesel	Small crane for medium duty lifting	
CRANE	FIXED JIB, CRAWLER	30 TONS	220	Diesel	Small crane for medium duty lifting	
CRANE	FIXED JIB, CRAWLER	40 TONS	220	Diesel	Small crane for medium duty lifting	
CRANE	FIXED JIB, CRAWLER	120 TONS	220	Diesel	Small crane for medium duty lifting	
CRANE	FIXED JIB, CRAWLER	165 TONS	250	Diesel	Large crane for heavy duty lifting	
CRANE	FIXED JIB, CRAWLER	400 TONS	350	Diesel	Large crane for heavy duty lifting	
PILING	DRILLING FRAME	AUGER	300	Diesel	Drilling machine for pier foundations	
PILING	DRILLING FRAME	AUGER	300	Diesel	Drilling machine for pier foundations	
COMPRESSOR	DIESEL(ROTARY SCREW)	250 CFM	80	Diesel	Air compressor for pneumatic construction tools and equipment	
COMPRESSOR	DIESEL(ROTARY SCREW)	365 CFM	80	Diesel	Air compressor for pneumatic construction tools and equipment	
COMPRESSOR	DIESEL(ROTARY SCREW)	600 CFM	80	Diesel	Air compressor for pneumatic construction tools and equipment	
CONCRETE	CONCRETE MIXER	6 SACK	300	Diesel	Concrete mixer for small foundations and supports	
CONCRETE	CONCRETE MIXER	16 SACK (1 CY)	300	Diesel	Concrete mixer for small foundations and supports	
CONCRETE	VIBRATOR GASOLINE	2.4 HP,2 IN HEAD	2.4	Gas	Small area compaction	
CONCRETE	POWER TROWEL,4 BLADE	36 IN DIA	5	Gas	Concrete finishing tool	
CONCRETE	SITE DUMPER	.75 CY, DIESEL	5	Diesel	On-site material hauling	
WELDING EQUIPMENT	PORTABLE DIESEL	300 AMPERES	25	Diesel	Welding equipment	
WELDING EQUIPMENT	PORTABLE DIESEL	400 AMPERES	25	Diesel	Welding equipment	
PIPING EQUIPMENT	CUTTING & BEVELLING	1 - 4 INCHES	10	Diesel	Pipe fitting and preparation	
PIPING EQUIPMENT	CUTTING & BEVELLING	6 - 20 INCHES	10	Diesel	Pipe fitting and preparation	
PIPING EQUIPMENT	CUTTING & BEVELLING	22 - 30 INCHES	15	Diesel	Pipe fitting and preparation	
PUMP	DIAPHRAGM	4 INCHES SUCTION	10	Gas	Small pump for sumps and general construction usage	
ELECTRIC EQUIP/TOOL	GENERATOR SET	10 KW	50	Gas	Small generator for construction tools	
ASPHALT EQUIPMENT	PAVER/FINISHER	10 FEET WIDE	100	Diesel	Pavement finishing	
ASPHALT EQUIPMENT	SPREADER TRAILER,GAS	2000 GAL, SPRAY	100	Gas	Pavement spreading	

ID #	Category for Main Sheet Calcs
1	Bore/Drill Rigs/Pile Drivers
2	Cement Mixers
3	Industrial/Concrete Saws
4	Cranes
5	Crawler Tractors/Dozers
6	Crushing/Processing Eq.
7	Dump and Tender Trucks
8	Excavators
9	Forklifts/Aerial Lifts/Booms
10	Generators/Compressors
11	Graders
12	Off Highway Tractors
13	Off Highway Trucks
14	Other Const. Eq.-Diesel
15	Pavers
16	Paving Eq./Surfacing Eq.
17	Plate Compactors
18	Rollers/Compactors
19	Rough Terrain Forklifts
20	Rubber Tired Dozers
21	Rubber Tired Loaders
22	Scrapers
23	Signal Boards/Light Sets
24	Skid Steer Loaders
25	Tractors/Loaders/Backhoes
26	Trenchers
27	Welders
28	Site Support-Gasoline
29	Site Support-Diesel
30	Other Const. Eq.-Gasoline

AUTO	CAR 4-DOOR	STANDARD	190	Gas	Administrative and personnel vehicle for site usage
TRUCK	PICKUP	.75 TONS- 4 X 2	190	Gas	General construction usage vehicle
TRUCK	PICKUP	.75 TONS- 4 X 4	200	Diesel	General construction usage vehicle
TRUCK	PICKUP - CREW CAB	.75 TONS- 4 X 4	200	Diesel	General construction usage vehicle
TRUCK	FLATBED	2 TONS- 4 X 2	200	Gas	On-site material hauling
TRUCK	FLATBED	6 TONS- 4 X 2	200	Diesel	On-site material hauling
TRUCK	FLATBED	15 TONS- 4 X 2	200	Diesel	On-site material hauling
TRUCK	A-FRAME	4 X 4	200	Gas	On-site material hauling
TRUCK	CHERRY PICKER	NON-INSULATED	185	Diesel	Small crane for light duty lifting
TRUCK	DUMP TRUCK	6 CY	250	Diesel	On-site material hauling
TRUCK	DUMP TRUCK	12 CY	300	Diesel	On-site material hauling
TRUCK	DUMP TRUCK	20 CY	300	Diesel	On-site material hauling
TRACTOR	TRUCK TRACTOR	30 TONS 6X4	100	Diesel	Trailer pulling and general construction usage
TRACTOR	TRUCK TRACTOR	60 TONS 6X4	100	Diesel	Trailer pulling and general construction usage
TRACTOR	WHEEL, W/TOW HITCH	50 HP	50	Diesel	Trailer pulling and general construction usage
CRANE	TELESCOPIC JIB, SELF	PROP. 15 TONS	185	Diesel	Small crane for light duty lifting
CRANE	TELESCOPIC JIB	TRUCK - 20 TONS	220	Diesel	Small crane for medium duty lifting
CRANE	TELESCOPIC JIB	TRUCK - 25 TONS	220	Diesel	Small crane for medium duty lifting
CRANE	TELESCOPIC JIB	TRUCK - 50 TONS	220	Diesel	Small crane for medium duty lifting
CRANE	FIXED JIB	TRUCK - 60 TONS	220	Diesel	Small crane for medium duty lifting
CRANE	FIXED JIB, CRAWLER	20 TONS	220	Diesel	Small crane for medium duty lifting
COMPRESSOR	DIESEL(ROTARY SCREW)	250 CFM	80	Diesel	Air compressor for pneumatic construction tools and equipment
COMPRESSOR	DIESEL(ROTARY SCREW)	365 CFM	80	Diesel	Air compressor for pneumatic construction tools and equipment
COMPRESSOR	DIESEL(ROTARY SCREW)	600 CFM	80	Diesel	Air compressor for pneumatic construction tools and equipment
CONCRETE	CONCRETE MIXER	6 SACK	300	Diesel	Concrete mixer for small foundations and supports
CONCRETE	CONCRETE MIXER	16 SACK (1 CY)	300	Diesel	Concrete mixer for small foundations and supports
CONCRETE	VIBRATOR GASOLINE	2.4 HP,2 IN HEAD	2.4	Gas	Small area compaction
CONCRETE	POWER TROWEL,4 BLADE	36 IN DIA	5	Gas	Concrete finishing tool
CONCRETE	SITE DUMPER	.75 CY, DIESEL	5	Diesel	On-site material hauling
WELDING EQUIPMENT	PORTABLE GASOLINE	200 AMPERES	25	Gas	Welding equipment
WELDING EQUIPMENT	PORTABLE DIESEL	400 AMPERES	25	Diesel	Welding equipment
PIPING EQUIPMENT	CUTTING & BEVELLING	6 - 20 INCHES	10	Diesel	Pipe fitting and preparation
PUMP	DIAPHRAGM	4 INCHES SUCTION	10	Gas	Small pump for sumps and general construction usage
ELECTRIC EQUIP/TOOL	GENERATOR SET	10 KW	50	Gas	Small generator for construction tools
ASPHALT EQUIPMENT	PAVER/FINISHER	10 FEET WIDE	100	Diesel	Pavement finishing

Equipment Usage On-Site by Month

EQUIPMENT DESCRIPTION			Hours/Day*	Number Used Each Month																									Total Hp-Hrs	Eq Cat ID
				M1	M2	M3	M4	M5	M6	M7	M8	M9	M10	M11	M12	M13	M14	M15	M16	M17	M18	M19	M20	M21	M22	M23	M24	M25	M26		
TRUCK	PICKUP	.5 TONS- 4 X 2	10	6	6	6	6	6	6																					68400	28
TRUCK	FUEL/LUBE	6 Tons - 4X2	10	4	4	4	4	4	4																					60000	29
TRUCK	PICKUP	1.0 TONS- 4 X 4	10	3	3	3	3	3	3																					36000	29
14 M MOTOR GRADER	GRADING EQUIPMENT	47,133 LB	10	6	6	6	6	6	6																					93240	11
623G SCRAPER	GRADING EQUIPMENT	23 CY	10	32	32	32	32	32	32																					633600	11
657G SCRAPER	GRADING EQUIPMENT	44 CY	10	5	5	5	5	5	5																					146100	11
825 H COMPACTOR	GRADING EQUIPMENT	72,164 LB	10	3	3	3	3	3	3																					63720	11
631 WATER PULL (10K)	GRADING EQUIPMENT	10,000 GALLON	10	6	6	6	6	6	6																					153000	11
D8 DOZERS	GRADING EQUIPMENT	44,418 LB	10	3	3	3	3	3	3																					36000	11
414E INDUSTRIAL LOADER	GRADING EQUIPMENT	1 CY	10							1	1	1	1	1	1	1	1	1	1	1	1	1	1	1	1	1	1	1	1	17800	11
WATER TRUCK	GRADING EQUIPMENT	4,000 GALLON	10							1	1	1	1	1	1	1	1	1	1	1	1	1	1	1	1	1	1	1	1	60000	11
TRUCK	DUMP TRUCK	6 CY	10							1	1	1	1	1	1	1	1	1	1	1	1	1	1	1	1	1	1	1	1	50000	7
POWER IN COR & SITE AREA				48	48	48	48	48	48	3	3	3	3	3	3	3	3	3	3	3	3	3	3	3	3	3	3	3	3	1417860	

AUTO	CAR 4-DOOR	STANDARD	10					1	1	1	1	1	1	1	1	2	2	2	2	2	2	2	2	2	2	1	1	1	1	60800	28
TRUCK	PICKUP	.5 TONS- 4 X 2	10					1	1	1	1	1																		9500	28
TRUCK	PICKUP	.75 TONS- 4 X 2	10								1	2	4	6	8	10	12	12	12	12	12	12	10	10	8	8	6	4	3	288800	28
TRUCK	PICKUP	.75 TONS- 4 X 4	10					2	2	4	6	8	12	12	12	12	12	12	12	12	12	12	12	12	8	8	8	5	4	398000	29
TRUCK	PICKUP - CREW CAB	.75 TONS- 4 X 4	10																	1	1	1	1	1	1	1	1	1		16000	29
TRUCK	PICKUP	1.0 TONS- 4 X 4	10								1	1	1	1	1	1	1	1	1	1	1	1	1	1	1					30000	29
TRUCK	FLATBED	2 TONS- 4 X 2	10								1	1	1	1	1	1	1	1	1	1	1	1	1	1	1	1				32000	29
TRUCK	FLATBED	6 TONS- 4 X 2	10							1	1	1	1	1	1	1	1	1	1	1	1									26000	29
TRUCK	FLATBED	15 TONS- 4 X 2	10															1	1	1	1	1								12000	13
TRUCK	FLATBED	30 TONS- 6 X 4	10																							1				2500	13
TRUCK	A-FRAME	4 X 4	10					2	4	4	4	4	4	4	4	4	4	4	4	4	4	4	4	4	4	4	4	3	2	166000	28
TRUCK	LUBE/GREASE		10																	1										2500	7
TRUCK	CHERRY PICKER	NON-INSULATED	10																				1	1	1	1				7400	9
TRUCK	DUMP TRUCK	6 CY	10																		1	1	1	1	1	1				15000	7
TRUCK	DUMP TRUCK	12 CY	10											1	1	1	1	1	1	1										24000	7
TRUCK	DUMP TRUCK	20 CY	10							1	1	1	1	1																15000	7
TRACTOR	TRUCK TRACTOR	30 TONS 6X4	10					1	1	1																				3000	12
TRACTOR	TRUCK TRACTOR	60 TONS 6X4	10							1	1	1																		3000	12
TRACTOR	WHEEL, W/TOW HITCH	50 HP	10					3	4	6	6	6	6	8	8	8	8	8	8	8	8	8	8	6	6	6	4	3	2	69000	12
CRANE	TELESCOPIC JIB, SELF	PROP. 5 TONS	10							1	1	1	1	1																9250	9
CRANE	TELESCOPIC JIB, SELF	PROP. 10 TONS	10												1	1	1	1	1											9250	9
CRANE	TELESCOPIC JIB, SELF	PROP. 15 TONS	10					1	1	3	4	6	6	8	8	8	8	8	8	8	8	8	8	8	8	8	7	4	4	259000	9
CRANE	TELESCOPIC JIB	TRUCK - 20 TONS	10						2	4	6	8	8	8	8	8	8	8	8	8	8	8	8	8	8	8	8	6	4	330000	4
CRANE	TELESCOPIC JIB	TRUCK - 25 TONS	10			2	2	2	2	2	2	2	2	2	2	2	2	2	2	2	2	2	2	2	2	2	2	2	2	101200	4
CRANE	TELESCOPIC JIB	TRUCK - 30 TONS	10			1																								2200	4
CRANE	TELESCOPIC JIB	TRUCK - 70 TONS	10					1	1	1	1	2	2	2	2	2	2	2	2	1	1	1	1	1	1	1	1	1	1	66000	4
CRANE	FIXED JIB, CRAWLER	20 TONS	10																1	1	1	1	1	1	1	1	1	1	1	24200	4
CRANE	FIXED JIB, CRAWLER	30 TONS	10																							1	1	1		8600	4
CRANE	FIXED JIB, CRAWLER	40 TONS	10																							1				2200	4
CRANE	FIXED JIB, CRAWLER	120 TONS	10																								1			2200	4
CRANE	FIXED JIB, CRAWLER	165 TONS	10																		1	1	1							7500	4
CRANE	FIXED JIB, CRAWLER	400 TONS	10			1																					1			3500	4
PILING	DRILLING FRAME	AUTO	10					1	1	1																				3000	1
PILING	DRILLING FRAME	AUGER	10					1																						9000	1
COMPRESSOR	DIESEL(ROTARY SCREW)	250 CFM	10					1	1	1	1	1	1	1	1	1	1	1	1	1	2	2	2	2	1	1	1	1		800	10
COMPRESSOR	DIESEL(ROTARY SCREW)	365 CFM	10							1	1	2	2	2	2	4	4	4	4	4	4	4	4	4	2	2	2	2	2	20800	10
COMPRESSOR	DIESEL(ROTARY SCREW)	600 CFM	10			1																								3000	2
CONCRETE	CONCRETE MIXER	6 SACK	10			2		4	4	4	4	4	4	4	4	4	4	4	2	2										150000	2
CONCRETE	CONCRETE MIXER	16 SACK (1 CY)	10					1	1	1																				72	2
CONCRETE	VIBRATOR GASOLINE	2.4 HP,2 IN HEAD	10					1	2	2	2	2	2	1	1	1	1	1	1	1	1									950	2
CONCRETE	POWER TROWEL,4 BLADE	36 IN DIA	10					1	1	1	1	1	1	1	1	1	1	1	1											650	2
CONCRETE	SITE DUMPER	.75 CY, DIESEL	10						1																					250	27
WELDING EQUIPMENT	PORTABLE DIESEL	300 AMPERES	10					2	8	20	20	20	22	22	22	22	22	22	22	22	22	22	22	22	20	20	20	10		106500	27
WELDING EQUIPMENT	PORTABLE DIESEL	400 AMPERES	10																					1	1	1				300	14
PIPING EQUIPMENT	CUTTING & BEVELLING	1 - 4 INCHES	10															1	1	1	1	1	1	1	1	1	1			1100	14
PIPING EQUIPMENT	CUTTING & BEVELLING	6 - 20 INCHES	10															1	1	1	1	1	1	1	1	1				2850	14
PIPING EQUIPMENT	CUTTING & BEVELLING	22 - 30 INCHES	10						1	1	1	1	1	1	1	1	1	1	1	1	1	1	1	1	1	1				1600	30
PUMP	DIAPHRAGM	4 INCHES SUCTION	10			1	1	1	1	1	1	1	1	1	1	1	1	1	1	1	1	1	1	1	1	1	1	1	1	12000	30
ELECTRIC EQUIP/TOOL	GENERATOR SET	10 KW	10		1	1	1	1	1	1	1	1	1	1	1	1	1	1	1	1	1	1	1	1	1	1	1	1	1	1000	15
ASPHALT EQUIPMENT	PAVER/FINISHER	10 FEET WIDE	10																										1	1000	30
ASPHALT EQUIPMENT	SPREADER TRAILER,GAS	2000 GAL, SPRAY	10																												

	SOLAR FIELD		Downtime																													
AUTO	CAR 4-DOOR	STANDARD	20	1	1	1	1	1	1	1	1	1	1	2	2	2	2	2	2	2	2	2	2	2	2	2	2	2	2	2	0	
TRUCK	PICKUP	.75 TONS- 4 X 2	20	3	5	5	7	10	10	10	10	10	10	10	10	10	10	10	10	10	10	10	10	10	10	10	10	8	8	1	155800	28
TRUCK	PICKUP	.75 TONS- 4 X 4	20		5	5	10	10	10	10	10	10	10	10	10	10	10	10	10	10	10	10	10	10	10	10	10	10	8	4	874000	28
TRUCK	PICKUP - CREW CAB	.75 TONS- 4 X 4	20											1	1	1	1	1	1	1	1	1	1	1	1	1	1	1	1	7	948000	29
TRUCK	FLATBED	2 TONS- 4 X 2	20																1	1	1	1	1	1	1	1	1	1	1	1	64000	29
TRUCK	FLATBED	6 TONS- 4 X 2	20		1	1	1	1	1	1	1	1	1	1	1	1	1	1	1	1	1	1	1	1	1	1	1	1	1		40000	28
TRUCK	FLATBED	15 TONS- 4 X 2	20															2	2	2	2	2	2	2	2	2	2	2	2	1	144000	29
TRUCK	A-FRAME	4 X 4	20	2	2	4	4	4	4	4	4	4	4	4	4	4	4	4	4	4	4	4	4	1	1						8000	29
TRUCK	CHERRY PICKER	NON-INSULATED	20	1																				4	4	4	4	4	3	2	388000	28
TRUCK	DUMP TRUCK	6 CY	20	1	1	1	1	1	1	1																					3700	9
TRUCK	DUMP TRUCK	12 CY	20	1	1	1	1	1	1	1	1	1	1	2	2	2	2	2	2	2	2	2	1								35000	7
TRUCK	DUMP TRUCK	20 CY	20			1	1	1																1	1	1	1	1	1	1	210000	7
TRACTOR	TRUCK TRACTOR	30 TONS 6X4	20																												18000	7
TRACTOR	TRUCK TRACTOR	60 TONS 6X4	20																						1						2000	12
TRACTOR	WHEEL, W/TOW HITCH	50 HP	20		4	8	12	16	16	16	16	16	16	16	16	16	16	16	16	16	16	16	16			1					2000	12
CRANE	TELESCOPIC JIB, SELF	PROP. 15 TONS	20	2	2	2	2	2	4	4	6	8	8	8	8	8	8	8	8	8	8	8	8	8	8	13	12	12	6		355000	12
CRANE	TELESCOPIC JIB	TRUCK - 20 TONS	20	2	4	5	5	10	10	10	10	10	10	10	10	10	10	10	10	10	10	10	10	8	8	6	6	4	3		573500	9
CRANE	TELESCOPIC JIB	TRUCK - 25 TONS	20	1	1	1	1	1	1	1	1	1	1	1	1	1	1	1	1	1	1	1	1	1	1	8	8	3	1		950400	9
CRANE	TELESCOPIC JIB	TRUCK - 50 TONS	20																					1	1	1	1	1	1		114400	9
CRANE	FIXED JIB	TRUCK - 80 TONS	20																					1	1	1	1	1			22000	9
CRANE	FIXED JIB, CRAWLER	20 TONS	20	1	1	1	1	1	1	1	2	2	2	2	2	3	3	3	3	3	3	3	3			1					4400	9
COMPRESSOR	DIESEL(ROTARY SCREW)	250 CFM	20		1	1	1																	3	3	3	3	3	3	2	255200	9
COMPRESSOR	DIESEL(ROTARY SCREW)	365 CFM	20	2	2	2	4	5	5	5	5	5	5	5	5	5	5	6	6	6	6	6	6								4800	10
COMPRESSOR	DIESEL(ROTARY SCREW)	600 CFM	20									1	1	1	1	2	2	3	3	3	3	3	2	6	6	6	6	4	2		200000	10
CONCRETE	CONCRETE MIXER	6 SACK	20	1	1	1	1	1	2	2	2	2	2	1	1	1	1	1	1					2	2	2	2	1	1	1	54400	10
CONCRETE	CONCRETE MIXER	16 SACK (1 CY)	20	1	1	1	2	2	2	2	2	2	2	2	2	2	1	1	1												126000	2
CONCRETE	VIBRATOR GASOLINE	2.4 HP,2 IN HEAD	20			1	1	1	1	1	1	1																			156000	2
CONCRETE	POWER TROWEL,4 BLADE	36 IN DIA	20			1	1	1	1	1	1	1	1	1																	336	17
CONCRETE	SITE DUMPER	.75 CY, DIESEL	20	1	1	1	1	1	1	1	1	1	1	1	1	1															900	17
WELDING EQUIPMENT	PORTABLE GASOLINE	200 AMPERES	20																												1300	7
WELDING EQUIPMENT	PORTABLE DIESEL	400 AMPERES	20			10	25	25	25	25	25	25	25	25	25	25	25	25	25					1							500	27
PIPING EQUIPMENT	CUTTING & BEVELLING	6 - 20 INCHES	20										1	1	1	1	1	1	1	20	20	20	20	20	20	20	20	19	10		262000	27
PUMP	DIAPHRAGM	4 INCHES SUCTION	20	1	1	1	1	1	1	1	1	1								1	1	1	1	1	1	1	1	1			3200	14
ELECTRIC EQUIP/TOOL	GENERATOR SET	10 KW	20						1	1	1	1																			1800	30
ASPHALT EQUIPMENT	PAVER/FINISHER	10 FEET WIDE	20																										1	1	4000	30
																															4000	15
				21	35	56	93	124	140	167	174	186	190	198	198	205	205	209	210	201	200	200	194	196	189	178	165	138	87		8351508	

Month 3 will be used to represent the worst case month for site grading/prep, etc.
Month 16 will be used represent the worst case month for site equipment emissions, etc.

Avg Month: 160

Ratio of Max to Avg Month: 1.31

Total 9769368

Table C.5-7 Offsite Equipment and Manpower Schedules
Offsite Construction Vehicles

VEHICLE TYPE	HP	Fuel Type	Load Factor (%)	USAGE DESCRIPTION
Off-Site Flat Bed Trucks (From Rail Facility)	200	gasoline		Material Hauling
Off-Site Asphalt Trucks	200	diesel		Asphalt Hauling
Off-Site Cement Trucks	310	diesel		Concrete Delivery
Off-Site Construction Worker Commute	125	gasoline		Personal Vehicles (see commute table below)
Off-Site Dump Trucks	275	diesel		Material Hauling
Off-Site Low Boy Trucks (From Rail Facility)	250	diesel		Material Hauling
Off-Site Pickup Trucks	200	gasoline		Light duty material hauling
Off-Site Pipe Hauling Trucks (From Rail Facility)	250	diesel		Piping material hauling
Off-Site Water Trucks	250	diesel		Dust suppression water
Off-Site Fuel/Lube Trucks	200	gasoline		Mobile fuel & lubrication services
Off-Site HTF Delivery Trucks (From Rail Facility)	250	diesel		Delivery of HTF (transfer from rail yard)
Off-Site Box Van Trucks	200	diesel		Material Hauling (Small Items / Dry Requirement Items)

Note: Use separate sheet (Site Construction Equipment) for on-site vehicles

Average Vehicle Miles Traveled per Day and Number of Vehicles

VEHICLE TYPE	Mi./ Veh.-Day	Number M1	M2	M3	M4	M5	M6	M7	M8	M9	M10	M11	M12	M13	M14	M15	M16	M17	M18	M19	M20	M21	M22	M23	M24	M25	M26	Totals	
Off-Site Flat Bed Trucks (From Rail Facility)	40	1	2	2	2	2	2	2	2	2	2	2	2	2	2	2	2	2	3	3	3	3	3	3	3	2	2	1247	gasoline
Off-Site Asphalt Trucks	40	0	0	0	0	0	0	0	0	0	0	0	0	0	0	0	0	0	0	0	0	0	3	3	3	3	2	301	diesel
Off-Site Cement Trucks	40	1	12	46	46	55	55	55	55	55	55	55	55	55	55	55	55	55	55	55	55	46	46	46	37	14	4	25327	diesel
Off-Site Dump Trucks	40	1	1	1	1	0	0	0	0	0	0	0	0	0	0	0	0	0	0	0	0	0	0	0	0	0	0	86	diesel
Off-Site Low Boy Trucks (From Rail Facility)	40	1	1	1	2	2	2	2	2	2	2	2	2	2	2	2	2	2	2	2	2	2	2	2	2	1	1	1011	diesel
Off-Site Pickup Trucks	40	0	0	0	0	0	0	0	0	0	0	0	0	0	0	0	0	0	0	0	0	1	1	1	1	1	0	108	gasoline
Off-Site Pipe Hauling Trucks (From Rail Facility)	40	0	0	0	0	0	0	0	0	0	3	4	5	5	5	5	5	5	5	4	2	0	0	0	0	0	0	1032	diesel
Off-Site Water Trucks	40	1	1	1	0	0	0	0	0	0	0	0	0	0	0	0	0	0	0	0	0	0	0	0	0	0	0	65	diesel
Off-Site Fuel/Lube Trucks	40	1	1	1	1	1	1	1	1	1	1	1	1	1	1	1	1	1	1	1	1	1	1	1	1	1	0	538	gasoline
Off-Site HTF Delivery Trucks (From Rail Facility)	40	0	0	0	0	0	0	0	0	0	0	0	0	0	0	0	0	0	1	2	2	2	2	2	2	2	2	366	diesel
Off-Site Box Van Trucks	40	0	0	0	0	0	0	0	0	0	0	0	0	0	0	0	2	2	2	2	2	2	2	2	2	1	0	409	diesel
																												30487	

VEHICLE TYPE	Mi./ Veh.-Day	Vehicle-Miles-Traveled (mi/day) M1	M2	M3	M4	M5	M6	M7	M8	M9	M10	M11	M12	M13	M14	M15	M16	M17	M18	M19	M20	M21	M22	M23	M24	M25	M26	VMT		Delivery data diesel VMT	gasoline VMT
Off-Site Flat Bed Trucks (From Rail Facility)	40	40	80	80	80	80	80	80	80	80	80	80	80	80	80	80	80	80	120	120	120	120	120	120	120	80	80	49680	gasoline	1143800	75680
Off-Site Asphalt Trucks	40	0	0	0	0	0	0	0	0	0	0	0	0	0	0	0	0	0	0	0	0	0	120	120	120	120	80	12040	diesel		
Off-Site Cement Trucks	40	40	480	1,840	1,840	2,200	2,200	2,200	2,200	2,200	2,200	2,200	2,200	2,200	2,200	2,200	2,200	2,200	2,200	2,200	2,200	1,840	1,840	1,840	1,480	560	160	1013080	diesel		
Off-Site Dump Trucks	40	40	40	40	40	0	0	0	0	0	0	0	0	0	0	0	0	0	0	0	0	0	0	0	0	0	0	3440	diesel		
Off-Site Low Boy Trucks (From Rail Facility)	40	40	40	40	80	80	80	80	80	80	80	80	80	80	80	80	80	80	80	80	80	80	80	80	80	40	40	40420	diesel		
Off-Site Pickup Trucks	40	0	0	0	0	0	0	0	0	0	0	0	0	0	0	0	0	0	0	0	0	40	40	40	40	40	0	4300	gasoline		
Off-Site Pipe Hauling Trucks (From Rail Facility)	40	0	0	0	0	0	0	0	0	0	120	160	200	200	200	200	200	200	200	160	80	0	0	0	0	0	0	41280	diesel		
Off-Site Water Trucks	40	40	40	40	0	0	0	0	0	0	0	0	0	0	0	0	0	0	0	0	0	0	0	0	0	0	0	2580	diesel		
Off-Site Fuel/Lube Trucks	40	40	40	40	40	40	40	40	40	40	40	40	40	40	40	40	40	40	40	40	40	40	40	40	40	40	0	21500	gasoline		
Off-Site HTF Delivery Trucks (From Rail Facility)	40	0	0	0	0	0	0	0	0	0	0	0	0	0	0	0	0	0	40	80	80	80	80	80	80	80	80	14620	diesel		
Off-Site Box Van Trucks	40	0	0	0	0	0	0	0	0	0	0	0	0	0	0	0	80	80	80	80	80	80	80	80	80	40	0	18340	diesel		
																											Total	1219480			

Off-Site Construction Worker Housing Adjustments

Total		173	244	321	411	680	862	896	948	968	998	1086	1081	1127	1149	1144	1139	1162	1155	1130	1069	1061	946	885	607	217	138		
Solar Collector Array Facility (included in Total)					10	150	298	298	298	298	298	298	298	298	298	298	298	298	298	298	298	298	298	298	150				
Supervisors/Management/Admin (included in Total)		8	24	35	45	65	75	75	75	75	85	85	85	85	85	85	85	85	80	75	75	75	55	55	55	30	15	5674	
Final Off-Site Construction Worker Commute (people, not vehicles)		M1	M2	M3	M4	M5	M6	M7	M8	M9	M10	M11	M12	M13	M14	M15	M16	M17	M18	M19	M20	M21	M22	M23	M24	M25	M26	1672	
Day Shift - non Bussed		49	79	107	137	219	247	256	269	274	285	307	306	317	323	322	320	326	322	314	299	294	260	244	175	77	46	6173	
Day Shift - Bussed		124	165	215	275	461	575	602	640	655	668	734	730	765	781	777	774	791	790	776	731	717	657	612	403	140	92	14648	
Evening Shift - non Bussed							25	25	25	25	28	28	28	28	28	28	28	28	26	25	25	25	18	18	18			479	
Evening Shift - Bussed (if available)							15	15	15	15	17	17	17	17	17	17	17	17	16	15	15	15	11	11	11			290	
check cells		TRUE	TRUE	TRUE	TRUE	TRUE	TRUE	TRUE	TRUE	TRUE	TRUE	TRUE	TRUE	TRUE	TRUE	TRUE	TRUE	TRUE	TRUE	TRUE	TRUE	TRUE	TRUE	TRUE	TRUE	TRUE	TRUE		

																												Total VMT	
Day shift total worker vehicles assuming 20% carpool		39	63	85	109	175	198	205	215	219	228	246	245	254	258	257	256	261	258	251	239	235	208	195	140	61	37		
Day shift total buses (roundtrips)		3	3	4	6	10	12	13	13	14	14	15	15	16	16	16	16	16	16	16	15	15	14	13	8	3	2		
Evening shift total worker vehicles assuming no bussing and 20% carpool		0	0	0	0	0	32	32	32	32	36	36	36	36	36	36	36	36	34	32	32	32	23	23	23	0	0		
Total Vehicle Trips (non-bussed) per month		847	1359	1832	2348	3763	4932	5087	5302	5388	5680	6059	6037	6235	6330	6308	6287	6386	6274	6085	5822	5745	4967	4704	3509	1320	787	119390	6208254
Total Bussed Vehicles Trips per month		55	74	96	123	207	258	270	287	293	299	329	327	342	350	348	346	354	354	348	327	321	294	274	181	63	41	6561	341171

Max workers per month (assume pre day is same value):	1162	
Avg workers per month (assume pre day is same value):	830	
Assume all trips for delivery and worker commute are from Barstow:	26	miles one way

(1) delivery trips from BNSF Barstow and urban area
(2) commute trips from Barstow urban area or commute staging area
(3) delivery trips only one way as non-dedicated to site
(4) commute trips are two way for all modes
(5) assume bus capacity is 48 people
(6) assume evening shift is all non-bussed

Title : MDAB-2010
Version : Emfac2007 V2.3 Nov 1 2006
Run Date : 2009/04/28 13:41:13
Scen Year: 2010 -- All model years in the range 1966 to 2010 selected
Season : Annual
Area : Mojave Desert Air Basin Average
I/M Stat : Enhanced Basic (2005) -- Using I/M schedule for area 69 San Bernardino (MD)
Emissions: Tons Per Day

Table C.5-8

	Light Duty Passenger Cars				Light Duty Trucks				Medium Duty Trucks				Heavy Duty Trucks							
													Gasoline Trucks							
	Non-cat	Cat	Diesel	Total	Non-cat	Cat	Diesel	Total	Non-cat	Cat	Diesel	Total	Non-cat	Cat	Total	Diesel Trucks	Total HD Trucks	Urban Buses	Motor-cycles	All Vehicles
Vehicles	4762.	321674.	913.	327349.	5407.	223284.	6734.	235425.	914.	85631.	7171.	93715.	891.	13894.	14784.	36230.	51014.	178.	42332.	750014.
VMT/1000	93.	13737.	26.	13856.	135.	10030.	265.	10430.	22.	3871.	333.	4226.	10.	271.	281.	5474.	5755.	26.	587.	34881.
Trips	18897.	2026910.	5027.	2050830.	21842.	1399050.	41371.	1462270.	7081.	900250.	87940.	995270.	9365.	65222.	74588.	258418.	333006.	712.	84656.	4926750.
Reactive Organic Gas Emissions																				
Run Exh	0.62	1.11	0.00	1.74	0.93	1.35	0.02	2.30	0.18	0.51	0.05	0.75	0.05	0.18	0.24	5.90	6.14	0.03	2.28	13.24
Idle Exh	0.00	0.00	0.00	0.00	0.00	0.00	0.00	0.00	0.00	0.02	0.00	0.02	0.00	0.00	0.00	0.70	0.70	0.00	0.00	0.72
Start Ex	0.11	1.22	0.00	1.33	0.13	1.08	0.00	1.21	0.05	0.62	0.00	0.67	0.11	0.14	0.25	0.00	0.25	0.00	0.22	3.69
Total Ex	0.74	2.33	0.00	3.07	1.07	2.43	0.02	3.51	0.23	1.15	0.05	1.44	0.17	0.33	0.50	6.60	7.10	0.03	2.49	17.65
Diurnal	0.03	0.26	0.00	0.30	0.04	0.21	0.00	0.25	0.00	0.05	0.00	0.06	0.00	0.00	0.00	0.00	0.00	0.00	0.09	0.70
Hot Soak	0.06	0.34	0.00	0.40	0.07	0.26	0.00	0.33	0.01	0.08	0.00	0.09	0.01	0.00	0.01	0.00	0.01	0.00	0.04	0.87
Running	0.37	1.00	0.00	1.38	0.26	1.25	0.00	1.51	0.03	0.59	0.00	0.62	0.05	0.05	0.10	0.00	0.10	0.00	0.18	3.79
Resting	0.02	0.15	0.00	0.17	0.02	0.13	0.00	0.15	0.00	0.03	0.00	0.03	0.00	0.00	0.00	0.00	0.00	0.00	0.04	0.41
Total	1.23	4.09	0.00	5.32	1.47	4.28	0.02	5.76	0.27	1.91	0.05	2.24	0.22	0.38	0.61	6.60	7.21	0.03	2.85	23.41
Carbon Monoxide Emissions																				
Run Exh	8.08	37.91	0.02	46.01	11.77	45.41	0.16	57.34	3.55	13.70	0.30	17.55	1.83	5.06	6.89	23.37	30.25	0.19	29.68	181.03
Idle Exh	0.00	0.00	0.00	0.00	0.00	0.00	0.00	0.00	0.00	0.11	0.01	0.12	0.00	0.02	0.03	2.72	2.75	0.00	0.00	2.87
Start Ex	0.66	14.35	0.00	15.01	0.78	14.00	0.00	14.78	0.40	7.45	0.00	7.85	0.99	2.42	3.41	0.00	3.41	0.02	0.91	41.98
Total Ex	8.74	52.26	0.02	61.02	12.55	59.42	0.16	72.12	3.96	21.26	0.30	25.52	2.82	7.50	10.32	26.09	36.41	0.21	30.59	225.88
Oxides of Nitrogen Emissions																				
Run Exh	0.48	3.92	0.04	4.45	0.69	5.97	0.46	7.11	0.17	2.46	1.95	4.58	0.05	1.05	1.10	87.41	88.51	0.18	0.83	105.67
Idle Exh	0.00	0.00	0.00	0.00	0.00	0.00	0.00	0.00	0.00	0.00	0.02	0.02	0.00	0.00	0.00	6.25	6.25	0.00	0.00	6.27
Start Ex	0.03	1.03	0.00	1.06	0.03	1.14	0.00	1.17	0.01	1.28	0.00	1.29	0.02	0.29	0.30	0.00	0.30	0.00	0.03	3.86
Total Ex	0.51	4.95	0.04	5.51	0.72	7.11	0.46	8.29	0.18	3.74	1.97	5.90	0.07	1.33	1.40	93.66	95.06	0.18	0.86	115.79
Carbon Dioxide Emissions (000)																				
Run Exh	0.05	5.49	0.01	5.55	0.07	5.00	0.10	5.17	0.01	2.71	0.19	2.92	0.01	0.19	0.20	10.70	10.90	0.05	0.09	24.69
Idle Exh	0.00	0.00	0.00	0.00	0.00	0.00	0.00	0.00	0.00	0.00	0.00	0.00	0.00	0.00	0.00	0.37	0.37	0.00	0.00	0.38
Start Ex	0.00	0.16	0.00	0.17	0.00	0.14	0.00	0.14	0.00	0.08	0.00	0.08	0.00	0.00	0.00	0.00	0.00	0.00	0.00	0.40
Total Ex	0.05	5.65	0.01	5.72	0.08	5.14	0.10	5.32	0.02	2.80	0.19	3.01	0.01	0.20	0.21	11.08	11.28	0.05	0.10	25.47
PM10 Emissions																				
Run Exh	0.00	0.18	0.00	0.19	0.00	0.26	0.01	0.27	0.00	0.09	0.01	0.11	0.00	0.00	0.00	3.79	3.79	0.00	0.02	4.39
Idle Exh	0.00	0.00	0.00	0.00	0.00	0.00	0.00	0.00	0.00	0.00	0.00	0.00	0.00	0.00	0.00	0.10	0.10	0.00	0.00	0.10
Start Ex	0.00	0.02	0.00	0.02	0.00	0.02	0.00	0.02	0.00	0.01	0.00	0.01	0.00	0.00	0.00	0.00	0.00	0.00	0.00	0.05
Total Ex	0.00	0.20	0.00	0.20	0.00	0.28	0.01	0.30	0.00	0.10	0.01	0.12	0.00	0.00	0.00	3.89	3.89	0.00	0.03	4.54
TireWear	0.00	0.12	0.00	0.12	0.00	0.09	0.00	0.09	0.00	0.04	0.00	0.04	0.00	0.00	0.00	0.21	0.21	0.00	0.00	0.47
BrakeWr	0.00	0.19	0.00	0.19	0.00	0.14	0.00	0.14	0.00	0.05	0.00	0.06	0.00	0.00	0.00	0.16	0.17	0.00	0.00	0.57
Total	0.01	0.51	0.00	0.52	0.01	0.50	0.02	0.53	0.00	0.19	0.02	0.21	0.00	0.01	0.01	4.26	4.27	0.00	0.03	5.57
Lead	0.00	0.00	0.00	0.00	0.00	0.00	0.00	0.00	0.00	0.00	0.00	0.00	0.00	0.00	0.00	0.00	0.00	0.00	0.00	0.00
SOx	0.00	0.06	0.00	0.06	0.00	0.05	0.00	0.05	0.00	0.03	0.00	0.03	0.00	0.00	0.00	0.11	0.11	0.00	0.00	0.25
Fuel Consumption (000 gallons)																				
Gasoline	7.21	587.97	0.00	595.18	10.26	536.58	0.00	546.84	2.42	290.29	0.00	292.71	1.45	21.47	22.92	0.00	22.92	1.05	15.52	1474.21
Diesel	0.00	0.00	0.93	0.93	0.00	0.00	9.12	9.12	0.00	0.00	17.15	17.15	0.00	0.00	0.00	997.05	997.05	3.52	0.00	1027.76

EMFAC Composite Emissions Factor Conversion

EMFAC 2007, V2.3, Nov 2006

County: MDAB
Year: 2010
Model Years: 1966-2010

EMFAC Burden Output

		LDP(gas)	LDP(diesel)	LDT(gas)	LDT(diesel)	MDT(gas)	MDT(diesel)	HDT(gas)	HDT(diesel)	Buses	Motorcycles
Daily VMT/1000		13830	26	10165	265	3893	333	281	5474	26	587
Daily VMT		13830000	26000	10165000	265000	3893000	333000	281000	5474000	26000	587000
ROG, tpd		5.32	0.001	5.74	0.02	2.19	0.05	0.61	6.6	0.03	2.85
CO, tpd		61	0.02	71.96	0.16	25.22	0.3	10.32	26.09	0.21	30.59
NOx, tpd		5.47	0.04	7.83	0.46	3.93	1.97	1.4	93.66	0.18	0.86
CO2, tpd	(x 1000) >	5710	10	5220	100	2820	190	210	11080	50	100
PM10, tpd		0.52	0.001	0.53	0.001	0.19	0.02	0.01	4.26	0.001	0.03
SOx, tpd		0.06	0.001	0.05	0.001	0.03	0.001	0.001	0.11	0.001	0.001

Composite Efs

	LDP(gas) g/VMT	LDP(diesel) g/VMT	LDT(gas) g/VMT	LDT(diesel) g/VMT	MDT(gas) g/VMT	MDT(diesel) g/VMT	HDT(gas) g/VMT	HDT(diesel) g/VMT	Buses g/VMT	Motorcycles g/VMT
ROG	0.35	0.00	0.51	0.0018	0.51	0.00	1.97	1.09	1.05	4.40
CO	4.00	0.00	6.42	0.0143	5.88	0.02	33.32	4.32	7.33	47.28
NOx	0.36	0.00	0.70	0.0411	0.92	0.13	4.52	15.52	6.28	1.33
CO2	374.55	0.66	465.86	8.9245	657.14	12.46	677.96	1836.24	1744.58	154.55
PM10	0.03	0.00	0.05	0.0001	0.04	0.00	0.03	0.71	0.03	0.05
SOx	0.0039	0.0001	0.0045	0.0001	0.0070	0.0001	0.0032	0.0182	0.0349	0.0015

Composite Efs

	LDP(gas) lb/VMT	LDP(diesel) lb/VMT	LDT(gas) lb/VMT	LDT(diesel) lb/VMT	MDT(gas) lb/VMT	MDT(diesel) lb/VMT	HDT(gas) lb/VMT	HDT(diesel) lb/VMT	Buses lb/VMT	Motorcycles lb/VMT
ROG	0.000769	0.000000	0.001129	0.000004	0.001125	0.000007	0.004342	0.002411	0.002308	0.009710
CO	0.008821	0.000003	0.014158	0.000031	0.012957	0.000043	0.073452	0.009532	0.016154	0.104225
NOx	0.000791	0.000006	0.001541	0.000091	0.002019	0.000285	0.009964	0.034220	0.013846	0.002930
CO2	0.825741	0.001446	1.027054	0.019675	1.448754	0.027477	1.494662	4.048228	3.846154	0.340716
PM10	0.000075	0.000000	0.000104	0.000000	0.000098	0.000003	0.000071	0.001556	0.000077	0.000102
SOx	0.000009	0.000000	0.000010	0.000000	0.000015	0.000000	0.000007	0.000040	0.000077	0.000003

Weighted Avg LDP/LDT Gasoline

	g/VMT	lb/VMT	Calc 1	0.424
ROG	0.418	0.00092	Calc 2	0.576
CO	5.027	0.01108		
NOx	0.503	0.00111		
CO2	413.2	0.91102		
PM10	0.040	0.00009		
SOx	0.004	0.00001		

	LDP(gas)	LDP(diesel)	LDT(gas)	LDT(diesel)	MDT(gas)	MDT(diesel)	HDT(gas)	HDT(diesel)	Buses	Motorcycles
Annual VMT	5.05E+09	9.49E+06	3.71E+09	9.67E+07	1.42E+09	1.22E+08	1.03E+08	2.00E+09	9.49E+06	2.14E+08
Daily Fuel Use, 10^3 gal	595.18	0.93	546.84	9.12	292.71	17.15	22.92	997.05	4.57	15.52
Daily Fuel Use, gals	595180	930	546840	9120	292710	17150	22920	997050	4570	15520
Annual Fuel Use, gals	217240700	339450	199596600	3328800	106839150	6259750	8365800	363923250	1668050	5664800
Average Miles/gallon	23.2	28.0	18.6	29.1	13.3	19.4	12.3	5.5	5.7	37.8

TAble C.5-10 Modeling Inputs/Results for Mojave Solar One Construction Impacts (Combustion Sources as 24 Point Sources)

Short Term Impacts (24 hrs and less)

	NOx	CO	SOx	PM10	PM2.5
Combustion (lbs/day)	80.13	40.56	0.26	5.00	4.90
Combustion (hrs/day)	20	20	20	20	20
Combustion (lbs/hr)	4.01	2.03	0.01	0.25	0.25
Combustion (g/sec)	5.05E-01	2.56E-01	1.64E-03	3.15E-02	3.09E-02
Construction Dust (lbs/day)				883.92	185.62
Construction Dust (hrs/day)				24	24
Construction Dust (lbs/hr)				36.83	7.73
Construction Dust (g/sec)	160.00 acres			4.64E+00	9.75E-01
AERMOD Inputs	**647,497 m^2**		**24 Pt.Srcs**		
Combustion (g/s/src)	2.103E-02	1.065E-02	6.825E-05	1.313E-03	1.286E-03
Construction Dust (g/s/m^2)				7.167E-06	1.505E-06
AERMOD Results (ug/m^3)					
Combustion Only					
1-hour Max	12.522	6.338	0.041	0.78137	
3-hour Max			0.039	0.75074	
8-hour Max		3.902		0.48102	
24-hour Max			0.016	0.30929	0.30310
All Particulate Sources					
24-hour Max				436.14722	91.59913
1-hour NO2 w/ OLM	12.522	for Max 1-hr O3 (ppm)		0.136	
Background (ug/m^3)					
1-hour Max	154	4025	94		
3-hour Max			23		
8-hour Max		1789			
24-hour Max			13	154	28
Total + Background (ug/m^3)					
1-hour Max	166.5	4031	94.04		
3-hour Max			23.04		
8-hour Max		1793			
24-hour Max			13.02	590	120

Long Term Impacts (annual)

	NOx	CO	SOx	PM10	PM2.5
Combustion (tons/year)	7.92	4.07	0.034	0.49	0.48
Combustion (days/year)**	260	260	260	260	260
Combustion (hrs/day)	20	20	20	20	20
Combustion (lbs/hr)**	2.17	1.12	0.01	0.13	0.13
Combustion (g/sec)	2.73E-01	1.40E-01	1.17E-03	1.69E-02	1.66E-02
Construction Dust (tons/year)				30.51	6.42
Construction Dust (days/year)				260	260
Construction Dust (hrs/day)				24	24
Construction Dust (lbs/hr)**				6.966	1.466
Construction Dust (g/sec)				8.78E-01	1.85E-01
Combustion (g/s/src)	1.139E-02	5.854E-03	4.890E-05	7.048E-04	6.904E-04
Construction Dust (g/s/m^2)				1.356E-06	2.852E-07
Combustion Only					
Annual	1.312		0.006	0.08117	0.07951
All Particulate Sources					
Annual				23.75815	5.03420
Annual NO2 w/ ARM	0.984	based on ARM Ratio of:		75%	
Background (ug/m^3)					
Annual	42		3	38.4	10.4
Total + Background (ug/m^3)					
Annual	42.98		3.01	62.2	15.4

**Even for construction projects taking less than 12-months or 7 days/wk, the hourly emissions for modeling are still based on total tons (projects<12 months) or tons/year (projects>12months) divided by 365 days since all days in the met dataset (i.e., all 12 months and all 365 days - i.e., 7 days/week) are modeled.

APPENDIX C.6

Evaluation of Best Available Control Technology

To evaluate BACT for the emergency engines and cooling towers, a number of California air district BACT determinations were reviewed.

Diesel Fired IC Engine BACT

BACT levels for the diesel fired IC engines are shown in Table C.6-1.

TABLE C.6-1 SUMMARY OF BACT RECOMMENDATIONS FROM DISTRICT GUIDANCE FOR DIESEL FIRED CI-IC ENGINES

	NO_x, g/bhp	CO, g/bhp	VOC, g/bhp	SO_x, %S wt.	PM_{10}, g/bhp
CI-IC Engines	2.8 - 6.19	0.37-3.7	0.07 - 1.5	≤ 0.05	0.07 - 0.40
Tier II*	4.5	2.6	0.3	≤ 0.05	0.15
Tier III*	2.8-4.5	2.6-3.7	0.2-0.3	LSDF	0.15-0.22

*For the proposed engine hp categories and estimated mfg year (2010).

The proposed diesel engines will also comply with the EPA Tier standards as applicable based upon engine size, year of manufacture, and service category.

The proposed fire pump diesel engine will comply with the CARB proposed Air Toxic Control Measure (ACTM) for Stationary Compression Ignition Engine (as amended). Since the FP engine is classified as emergency standby, with a rating greater than 50 hp, and operational hours consistent with NFPA 25 requirements, the PM10 performance standard to be met will be 0.22g/hp-hr using CARB certified diesel fuel. In addition the engine will comply with AQMD Rules and the Tier standards as delineated in Title 13 CCR Section 2423, based upon engine size, year of manufacture, and service category.

The proposed engines will also comply with NSPS Subpart IIII standards per 40 CFR 60.4205. Table C.6-2 presents the emissions standards for the proposed engines.

TABLE C.6-2 SUMMARY OF SUBPART IIII EMISSIONS LIMITS FOR DIESEL FIRED CI-IC ENGINES

	NO_x+ NMHC, g/bhp	CO, g/bhp	VOC, g/bhp	SO_x, %S wt.	PM_{10}, g/bhp
EGS Engine[1]	7.9	8.5	1.0	-	0.40
FP Engine (~346 hp)	3.0	2.6	0.2	-	0.15

*For the proposed engine hp categories and estimated mfg year (2010).

[1] Emissions limits in 40 CFR 89.112 converted from g/Kw-hr to g/hp-hr by 0.74 factor.

BACT as proposed in Section 5.2, Table 5.2-10 will insure compliance with the Subpart IIII emissions requirements.

Cooling Towers

The cooling towers will meet a drift fraction rate of 0.0005% (0.000005). This limit is proposed as BACT for these cooling towers. The drift limit of 0.000005 will be achieved by using high efficiency drift eliminators.

HTF System

BACT for the HTF storage and distribution system is described in detail in Appendix C.1 (Attachment C.1-1). BACT for the HTF system will consist of the following:

- Nitrogen blankets on the HTF storage tanks.
- Monitoring of the nitrogen system to insure tank blanketing is sufficient to minimize HTF losses.
- Daily inspections of the tanks and distribution system for the presence of leaks in the areas of valves, flanges, and pump seals.
- Continuous maintenance of the system.
- Proper handling of HTF during delivery, transfer to the system, and waste disposal.

Auxiliary Boilers

The auxiliary boilers (2) will be meet BACT through the use of natural gas (clean fuel), and the use of low NOx burners (LNB). These units will operate an average of 12 hours per day (24 hours per day operation is possible). The units are rated at ~21.5 mmbtu/hr each. Full load firing is expected to consume fuel at a rate of 258 mmbtu/day (each). BACT decisions made by the South Coast AQMD during the period 9-15-2000 through 7-11-2003 for boilers in this size range showed the following:

- NOx BACT range is 9-15 ppmv @ 3% O2.
- CO BACT range is 50-100 ppmv @ 3% O2.
- SOx, VOC, and PM10/PM2.5 BACT is the use of clean fuels.

The auxiliary boilers as proposed are showing NOx at a BACT level of 9 ppmv at 3% O2, and CO at a BACT level of 50 ppmv @ 3% O2. The use of natural gas would be considered BACT for SOx, VOC, and PM10/PM2.5. As such, the proposed boilers meet BACT.

APPENDIX C.7

Offset Listing

The MS1 project, pursuant to the MDAQMD NSR rule is **not** required to purchase or acquire sufficient emission reduction credits to offset the proposed project emissions due to its anticipated status as a non-major source. NSR rule required amounts of ERCs are delineated in Table C.7-1.

TABLE C.7-1 MDAQMD EMISSION BANK CREDITS REQUIRED BY MS1

	Emission Reduction Credits (lbs/yr)				
	PM_{10}	VOC	NO_x	SO_2	CO
Total Emission Credits Required to Mitigate MS1 Project Emissions Per District NSR Rule	0	0	0	0	0

* Values derived from Section 5.2.

MDAQMD offset thresholds are implemented on a "facility" basis. For new facilities the offset thresholds are compared to the facility potential to emit (PTE). Section 5.2, Table 5.2-7 indicates that the proposed facility PTE emissions are well below the Rule 1303 offset thresholds. Therefore, offsets pursuant to the MDAQMD NSR rule are not required.

APPENDIX C.8

Cumulative Impacts Analysis Protocol

Potential cumulative air quality impacts are not expected to occur or result from the MS1 Project due to the extremely low operational emissions from the proposed solar facility. As such, a cumulative impact analysis is not required at this time.

APPENDIX C.9

Air District Permitting Application Forms

This appendix contains the applicable air district permitting application forms for the identified devices and/or processes subject to district permitting jurisdiction. These application forms in conjunction with Volumes I and II of the AFC (specifically the Project Description Section, the Air Quality Section, and the Public Health Section) constitute the facility's application for an Authority/Permit to Construct pursuant to MDAQMD Rule 1306.

MOJAVE DESERT AIR QUALITY MANAGEMENT DISTRICT
14306 Park Avenue, Victorville, CA 92392-2310
(760) 245-1661 Facsimile: (760) 245-2022
www.mdaqmd.ca.gov
Eldon Heaston
Executive Director

APPLICATION FOR AUTHORITY TO CONSTRUCT AND PERMIT TO OPERATE

REMIT $226.00 WITH THIS DOCUMENT ($129.00 FOR CHANGE OF OWNER)

1. Permit To Be Issued To (company name to receive permit): Mojave Solar LLC	1a. Federal Tax ID No.:
2. Mailing/Billing Address (for above company name): 13911 Park Avenue, Suite 206, Victorville, CA 92392-2407	
3. Facility or Business License Name (for equipment location): Mojave Solar LLC	
4. Facility Address - Location of Equipment (if same as for company, enter "Same"): No address yet, use "same"	Location UTM or Lat/Long: 470036mE, 3874396mN NAD27

5. Contact Name/Title: Emiliano Garcia, Manager	Email Address: emiliano.garcia@solar.abengoa.com	Phone/Fax Nos.: P: (303) 925-8500 / F: (303) 928-8510

6. Application is hereby made for Authority To Construct (ATC) and Permit To Operate (PTO) the following equipment:
Mojave Solar I Project (See AFC Air Quality section and appendices for equipment details)

Air Pollution Control Equipment, if any (note that most APCE require a separate application):
See AFC Air Quality section and Appendices for APCE details.

7. Application is for: [X] New Construction [ ] Modification* [ ] Change of Owner*	For modification or change of owner: *Current Permit Number:

8. Type of Organization (check one):
[ ] Individual Owner [ ] Partnership [X] Corporation [ ] Utility [ ] Local Agency [ ] State Agency [ ] Federal Agency

9. General Nature of Business: Solar Electric Power Generation	Principal Product: Electricity	SIC Code (if known): 4911

10. Distances (feet and direction to closest):
see AFC Fenceline _____ Residence _____ Business _____ School

11. Facility Annual Throughput by Quarters (percent): 25 % Jan-Mar; 25 % Apr-Jun; 25 % Jul-Sep; 25 % Oct-Dec	12. Expected Facility Operating Hours: 16 Hrs/Day; 7 Days/Wk; 52 Wks/Yr; 5840 Total Hrs/Yr

13. Do you claim Confidentiality of Data (if yes, state nature of data on reverse in Remarks)? [ ] Yes [X] No

14. **Signature of Responsible Official:**	Official Title: General Manager	
Typed or Printed Name of Responsible Official: Emiliano Garcia	Phone Number: (303) 925-8500	Date Signed: 7-20-09

- For District Use Only -

Application Number:	*Invoice Number:*	*Permit Number:*	*Company/Facility Number:*

MOJAVE DESERT AIR QUALITY MANAGEMENT DISTRICT
GENERAL APPLICATION, continued

15. Stack Emissions Information:

Stack No.	FT. agl Stack Height	FT. Stack Diameter	F deg Exhaust Temp	ACFM Exhaust Flow Rate	FT/SEC Exhaust Velocity
1	see AFC Appendix C.1 and C.2 for all stack related data				
2					
3					
4					
			additional stacks		
5					
6					
7					
8					
9					
10					
11					
12					
13					
14					
15					
16					
17					
18					
19					
20					
21					
22					
23					
24					
25					

Stack Height is the distance above ground level to discharge point (feet)
Stack Diameter is the diameter (or equivalent circular diameter) of discharge point (nearest tenth foot)
If using cross-sectional area (A in square feet), equivalent diameter is D = (1.273A)^0.5
Exhaust Temp in degrees F, acutal or estimated to nearest 50 deg F
Exhaust Flow Rate at discharge point in actual cubic feet per minute (ACFM)
Exhaust Velocity in feet per second, design or measured

16. Remarks (basis for confidentiality of data, process description, modification description, etc.):

None, See AFC Sections on Air Quality and Public Health, and Appendices.

If you wish to specify process information as proprietary or confidential, space is provided for this purpose. The kinds and rates of emissions may not be held confidential; emissions are subject to public disclosure.

MOJAVE DESERT AIR QUALITY MANAGEMENT DISTRICT
14306 Park Avenue, Victorville, CA 92392-2310
(760) 245-1661 Facsimile: (760) 245-2022

www.mdaqmd.ca.gov
Eldon Heaston
Executive Director

APPLICATION FOR EXTERNAL COMBUSTION ENGINE (BOILER, ETC.) ONLY

Page 1 of 2: please type or print

REMIT $226.00 WITH THIS DOCUMENT ($129.00 FOR CHANGE OF OWNER)

1. Permit To Be Issued To (company name to receive permit): Mojave Solar LLC		1a. Federal Tax ID No.:
2. Mailing/Billing Address (for above company name): 13911 Park Avenue, Suite 206, Victorville, CA 92392-2407		
3. Facility or Business License Name (for equipment location): Mojave Solar LLC		
4. Facility Address - Location of Equipment (if same as for company, enter "Same"): No address yet, use "same"		Facility UTM or Lat/Long: 470036, 3874396
5. Contact Name/Title: Emiliano Garcia, Manager	Email Address: emiliano.garcia@solar.abengoa.com	Phone/Fax Nos.: P: (303) 925-8500 / F: (303) 928-8510
6. Application is hereby made for Authority To Construct (ATC) and Permit To Operate (PTO) the following equipment: Auxiliary Boiler #1		
7. Application is for: [X] New Construction [ ] Modification* [ ] Change of Owner*		For modification or change of owner: *Current Permit Number: _____
8. Type of Organization (check one): [ ] Individual Owner [ ] Partnership [X] Corporation [ ] Utility [ ] Local Agency [ ] State Agency [ ] Federal Agency		
9. Distances (feet and direction to closest): SEE AFC Fenceline _____ Residence _____ Business _____ School		
10. General Nature of Business: Solar Power Generating Facility	11. Principal Product: Electrical Power	
12. Facility Annual Throughput by Quarters (percent): see AFC % Jan-Mar, ____ % Apr-Jun, ____ % Jul-Sep, ____ % Oct-Dec	13. Facility Operating Hours: see AFC Hrs/Day, ____ Days/Wk, ____ Wks/Yr, ____ Total Hrs/Yr	
14. Do you claim Confidentiality of Data (if yes, state nature of data in attachment)? [ ] Yes [X] No		
15. Signature of Responsible Official:	Official Title: General Manager	
Typed or Printed Name of Responsible Official: Emiliano Garcia	Phone Number: (303) 925-8500	Date Signed: 7-20-09

- For District Use Only -

Application Number:	*Invoice Number:*	*Permit Number:*	*Company/Facility Number:*

MOJAVE DESERT AIR QUALITY MANAGEMENT DISTRICT
EXTERNAL COMBUSTION APPLICATION, continued

16. INFORMATION ON EQUIPMENT:

[X] Boiler [ ] Dryer [ ] Furnace [ ] Heater [ ] Kiln [ ] Oven [ ] Other, specify: _____

Manufacturer: Nebraska

Model No.: D-Type Serial No.: _

Maximum heat input rating (use Higher Heating Value) 21.5 MMBtu/hr or kW

Burner Manufacturer: _____ Burner Model No.: _

Number of burners: _____ Burner max heat input rating: _____ MMBtu/hr or kW

Percent excess air (or n/a): _____ Operating temps (C or F): _____ Av. _____ Max

Specify Primary Fuel (*attach fuel analysis for these fuels specifying HHV and sulfur content):

[X] Natural Gas [ ] LPG (Propane) [ ] CARB Diesel [ ] Coal* [ ] Petroleum Coke*

[ ] Digester Gas* [ ] Landfill Gas* [ ] Refinery Gas* [ ] Other,* specify: _____

Max hourly primary fuel usage: 0.021 Fuel units (ft^3, gal, etc.): mmscf

If secondary fuel is proposed, specify: _____ Max hourly usage: _____

Feedstock type and max process rate (specify units): _____

Unit Lat/Long or UTM Coordinates: see AFC Appendix C.2

Max annual hours: 4380 Exhaust Stack Height (feet): Inside Diameter (inches):

17. EMISSION CONTROLS: Check all that apply:

[X] Low NOx Burner [ ] Oxygen Trim [ ] Flue or Exhaust Gas Recirculation (FGR or EGR)

[ ] Oxidation Catalyst [ ] Selective Catalytic Reduction (SCR) [ ] Selective Non-Catalytic Reduction (SNCR)

[ ] Afterburner [ ] ESP [ ] Baghouse [ ] Other - Please specify: _____

18. MAX EMISSION RATES (CONTROLLED):

Pollutant	Concentration ppmvd or gr/dscf	Mass pounds/hour
Oxides of Nitrogen (NOx)	see AFC	
Oxides of Sulfur (SOx)		
Carbon Monoxide (CO)		
Total Particulates (TSP or PM30)		
Coarse Respirable Particulates (PM10)		
Fine Respirable Particulates (PM2.5)		
Total Organics (TOG)		
Volatile Organic Compounds (VOC, ROG or NMOG)		

19. DRYERS ONLY Check one:

[ ] Centrifugal [ ] Chip [ ] Fluidized Bed [ ] Rotary [ ] Spray [ ] Other, specify:

20. FURNACE ONLY Check one:

[ ] Annealing [ ] Burnoff [ ] Calcining [ ] Crucible [ ] Cupola [ ] Diffusion [ ] Electric [ ] Forge [ ] Pot

[ ] Holding [ ] Heat Treating [ ] Melting [ ] Reverbatory [ ] Rotary [ ] Sweating [ ] Oxide Growth

21. OVEN ONLY Check one:

[ ] Bakery [ ] Baking [ ] Curing [ ] Drying [ ] Fluidized Bed [ ] Stripping [ ] Solder Reflow

[ ] Roasting, specify type: _____ Firing Method: [ ] Direct [ ] Indirect

MOJAVE DESERT AIR QUALITY MANAGEMENT DISTRICT
14306 Park Avenue, Victorville, CA 92392-2310
(760) 245-1661 Facsimile: (760) 245-2022

www.mdaqmd.ca.gov
Eldon Heaston
Executive Director

APPLICATION FOR EXTERNAL COMBUSTION ENGINE (BOILER, ETC.) ONLY

Page 1 of 2: please type or print

REMIT $226.00 WITH THIS DOCUMENT ($129.00 FOR CHANGE OF OWNER)

1. Permit To Be Issued To (company name to receive permit): Mojave Solar LLC		1a. Federal Tax ID No.:
2. Mailing/Billing Address (for above company name): 13911 Park Avenue, Suite 206, Victorville, CA 92392-2407		
3. Facility or Business License Name (for equipment location): Mojave Solar LLC		
4. Facility Address - Location of Equipment (if same as for company, enter "Same"): No address yet, use "same"		Facility UTM or Lat/Long: 470036, 3874396
5. Contact Name/Title: Emiliano Garcia, Manager	Email Address: emiliano.garcia@solar.abengoa.com	Phone/Fax Nos.: P: (303) 925-8500 / F: (303) 928-8510
6. Application is hereby made for Authority To Construct (ATC) and Permit To Operate (PTO) the following equipment: Auxiliary Boiler #2		
7. Application is for: [X] New Construction [ ] Modification* [ ] Change of Owner*		For modification or change of owner: *Current Permit Number: _____
8. Type of Organization (check one): [ ] Individual Owner [ ] Partnership [X] Corporation [ ] Utility [ ] Local Agency [ ] State Agency [ ] Federal Agency		
9. Distances (feet and direction to closest): SEE AFC Fenceline _____ Residence _____ Business _____ School		
10. General Nature of Business: Solar Power Generating Facility	11. Principal Product: Electrical Power	
12. Facility Annual Throughput by Quarters (percent): see AFC % Jan-Mar; ____ % Apr-Jun; ____ % Jul-Sep; ____ % Oct-Dec	13. Facility Operating Hours: see AFC Hrs/Day; ____ Days/Wk; ____ Wks/Yr; ____ Total Hrs/Yr	
14. Do you claim Confidentiality of Data (if yes, state nature of data in attachment)? [ ] Yes [X] No		
15. Signature of Responsible Official:	Official Title: General Manager	
Typed or Printed Name of Responsible Official: Emiliano Garcia	Phone Number: (303) 925-8500	Date Signed: 7-20-09

- For District Use Only -

Application Number:	*Invoice Number:*	*Permit Number:*	*Company/Facility Number:*

MOJAVE DESERT AIR QUALITY MANAGEMENT DISTRICT
EXTERNAL COMBUSTION APPLICATION, continued

16. INFORMATION ON EQUIPMENT:

[X] Boiler [ ] Dryer [ ] Furnace [ ] Heater [ ] Kiln [ ] Oven [ ] Other, specify: _____

Manufacturer: Nebraska

Model No.: D-Type Serial No.: _

Maximum heat input rating (use Higher Heating Value) 21.5 MMBtu/hr or kW

Burner Manufacturer: _____ Burner Model No.: _

Number of burners: _____ Burner max heat input rating: _____ MMBtu/hr or kW

Percent excess air (or n/a): _____ Operating temps (C or F): _____ Av. _____ Max

Specify Primary Fuel (*attach fuel analysis for these fuels specifying HHV and sulfur content):

[X] Natural Gas [ ] LPG (Propane) [ ] CARB Diesel [ ] Coal* [ ] Petroleum Coke*

[ ] Digester Gas* [ ] Landfill Gas* [ ] Refinery Gas* [ ] Other,* specify: _____

Max hourly primary fuel usage: 0.021 Fuel units (ft^3, gal, etc.): mmscf

If secondary fuel is proposed, specify: _____ Max hourly usage: _____

Feedstock type and max process rate (specify units): _____

Unit Lat/Long or UTM Coordinates: see AFC Appendix C.2

Max annual hours: 4380 Exhaust Stack Height (feet): Inside Diameter (inches):

17. EMISSION CONTROLS: Check all that apply:

[X] Low NOx Burner [ ] Oxygen Trim [ ] Flue or Exhaust Gas Recirculation (FGR or EGR)

[ ] Oxidation Catalyst [ ] Selective Catalytic Reduction (SCR) [ ] Selective Non-Catalytic Reduction (SNCR)

[ ] Afterburner [ ] ESP [ ] Baghouse [ ] Other - Please specify: _____

18. MAX EMISSION RATES (CONTROLLED):

Pollutant	Concentration ppmvd or gr/dscf	Mass pounds/hour
Oxides of Nitrogen (NOx)	see AFC	
Oxides of Sulfur (SOx)		
Carbon Monoxide (CO)		
Total Particulates (TSP or PM30)		
Coarse Respirable Particulates (PM10)		
Fine Respirable Particulates (PM2.5)		
Total Organics (TOG)		
Volatile Organic Compounds (VOC, ROG or NMOG)		

19. DRYERS ONLY Check one:

[ ] Centrifugal [ ] Chip [ ] Fluidized Bed [ ] Rotary [ ] Spray [ ] Other, specify:

20. FURNACE ONLY Check one:

[ ] Annealing [ ] Burnoff [ ] Calcining [ ] Crucible [ ] Cupola [ ] Diffusion [ ] Electric [ ] Forge [ ] Pot

[ ] Holding [ ] Heat Treating [ ] Melting [ ] Reverbatory [ ] Rotary [ ] Sweating [ ] Oxide Growth

21. OVEN ONLY Check one:

[ ] Bakery [ ] Baking [ ] Curing [ ] Drying [ ] Fluidized Bed [ ] Stripping [ ] Solder Reflow

[ ] Roasting, specify type: _____ Firing Method: [ ] Direct [ ] Indirect

MOJAVE DESERT AIR QUALITY MANAGEMENT DISTRICT
14306 Park Avenue, Victorville, CA 92392-2310
(760) 245-1661 Facsimile: (760) 245-2022

www.mdaqmd.ca.gov
Eldon Heaston
Executive Director

APPLICATION FOR INTERNAL COMBUSTION ENGINE (I.C.E.) ONLY

Page 1 of 2: please type or print

REMIT $226.00 WITH THIS DOCUMENT ($129.00 FOR CHANGE OF OWNER)

1. Permit To Be Issued To (company name to receive permit): Mojave Solar LLC		1a. Federal Tax ID No.:
2. Mailing/Billing Address (for above company name): 13911 Park Avenue, Suite 206, Victorville, CA 92392-2407		
3. Facility or Business License Name (for equipment location): Mojave Solar LLC		
4. Facility Address - Location of Equipment (if same as for company, enter "Same"): No address yet, use "same"		Facility UTM or Lat/Long: 470036, 3874396
5. Contact Name/Title: Emiliano Garcia, Manager	Email Address: emiliano.garcia@solar.abengoa.com	Phone/Fax Nos.: P: (303) 925-8500 / F: (303) 928-8510
6. Application is hereby made for Authority To Construct (ATC) and Permit To Operate (PTO) the following equipment: Emergency Generator Engine #1		
7. Application is for: [X] New Construction [ ] Modification* [ ] Change of Owner*		For modification or change of owner: *Current Permit Number: _____
8. Type of Organization (check one): [ ] Individual Owner [ ] Partnership [X] Corporation [ ] Utility [ ] Local Agency [ ] State Agency [ ] Federal Agency		
9. Distances (feet and direction to closest): see AFC Fenceline _____ Residence _____ Business _____ School		
10. General Nature of Business: Solar Power Generating Facility	11. Principal Product: Electrical Power	
12. Facility Annual Throughput by Quarters (percent): see AFC % Jan-Mar, % Apr-Jun, % Jul-Sep, % Oct-Dec	13. Expected Operating Hours of IC Engine: see AFC Hrs/Day, Days/Wk, Wks/Yr, Total Hrs/Yr	
14. Do you claim Confidentiality of Data (if yes, state nature of data in attachment)? [ ] Yes [X] No		
15. Signature of Responsible Official:	Official Title: General Manager	
Typed or Printed Name of Responsible Official: Emiliano Garcia	Phone Number: (303) 925-8500	Date Signed: 7-20-09

- For District Use Only -

Application Number:	*Invoice Number:*	*Permit Number:*	*Company/Facility Number:*

MOJAVE DESERT AIR QUALITY MANAGEMENT DISTRICT
I.C.E. APPLICATION, continued

16. INFORMATION ON I.C.E.:

Manufacturer: Caterpillar - See mfg spec sheets in Appendix C.1

Model No.: 3516C-HDTA Serial No.:

Number of Cylinders: 16 Year of Manufacture:

Rating: 4190 BHP Speed: 1800 RPM

I.C.E. is? [X] New [ ] Existing Date Installed (MM/YYYY):

Prime [ ] Standby [ ] Emergency [X] Portable (Yes or No)?:

CARB engine certification Family: Certification EO#:

Is this engine included in a Demand Response plan?: Yes [ ] No [X]

Type of Fuel(s): Natural Gas [ ] Digester Gas [ ] Ethanol [ ] Landfill Gas [ ]
Propane [ ] CARB Diesel [X] Methanol [ ] Other:

Max fuel usage per hour: 173.3 Fuel units (ft^3, gal, etc.): gal/hr

Engine Lat/Long or UTM Coordinates: see AFC

Exhaust Stack Height (feet): 46 Inside Diameter (inches): 12 Y/N: Vertical? Y Capped? N

Is this I.C.E. (select all that apply): see AFC Appendix C.1

Direct Injected? [ ] After Cooled? [ ]
Turbo Charged? [ ] Inter Cooled? [ ]
Timing Retarded? [ ] Other - Please specify:

17. EMISSION RATES:

Pollutant	at Max.Load	Units	Origin of Emission Rate data: Manufacturer or	Source Test
Oxides of Nitrogen (NOx)	see AFC			
Oxides of Sulfur (SOx)				
Carbon Monoxide (CO)				
Particulates (PM10)				
Total Hydrocarbons (VOC)				

18. EMISSION CONTROL EQUIPMENT: Add on emission control equipment? [ ] Yes [ ] No

If yes: Manufacturer: Model No.:
Serial No.: *CARB EO#:

Type: SCR: [ ] Particulate Trap*: [ ] Ammonia Injection: [ ] Water Injection: [ ]
Non-S CR: [ ] Exhaust Gas Recirc*: [ ] Oxidation Catalyst*: [ ]

Other - Please specify:

19. INFORMATION OF ITEM BEING POWERED: This I.C.E. is used to power:

Electrical Generator [X] Compressor [ ] Pump [ ]
Paint Spray Gun [ ] Conveyor or Drive [ ] Fire Pump [ ]

Other - Please specify:

Manufacturer:

Model No.: Serial No.:

Type, Size or Rating: 2500 kw

MOJAVE DESERT AIR QUALITY MANAGEMENT DISTRICT
14306 Park Avenue, Victorville, CA 92392-2310
(760) 245-1661 Facsimile: (760) 245-2022

www.mdaqmd.ca.gov
Eldon Heaston
Executive Director

APPLICATION FOR INTERNAL COMBUSTION ENGINE (I.C.E.) ONLY

Page 1 of 2: please type or print

REMIT $226.00 WITH THIS DOCUMENT ($129.00 FOR CHANGE OF OWNER)

1. Permit To Be Issued To (company name to receive permit): Mojave Solar LLC		1a. Federal Tax ID No.:
2. Mailing/Billing Address (for above company name): 13911 Park Avenue, Suite 206, Victorville, CA 92392-2407		
3. Facility or Business License Name (for equipment location): Mojave Solar LLC		
4. Facility Address - Location of Equipment (if same as for company, enter "Same"): No address yet, use "same"		Facility UTM or Lat/Long: 470036, 3874396
5. Contact Name/Title: Emiliano Garcia, Manager	Email Address: emiliano.garcia@solar.abengoa.com	Phone/Fax Nos.: P: (303) 925-8500 / F: (303) 928-8510
6. Application is hereby made for Authority To Construct (ATC) and Permit To Operate (PTO) the following equipment: Emergency Generator Engine #2		
7. Application is for: [X] New Construction [ ] Modification* [ ] Change of Owner*		For modification or change of owner: *Current Permit Number: _____
8. Type of Organization (check one): [ ] Individual Owner [ ] Partnership [X] Corporation [ ] Utility [ ] Local Agency [ ] State Agency [ ] Federal Agency		
9. Distances (feet and direction to closest): see AFC Fenceline _____ Residence _____ Business _____ School		
10. General Nature of Business: Solar Power Generating Facility	11. Principal Product: Electrical Power	
12. Facility Annual Throughput by Quarters (percent): see AFC % Jan-Mar, % Apr-Jun, % Jul-Sep, % Oct-Dec	13. Expected Operating Hours of IC Engine: see AFC Hrs/Day, Days/Wk, Wks/Yr, Total Hrs/Yr	
14. Do you claim Confidentiality of Data (if yes, state nature of data in attachment)? [ ] Yes [X] No		
15. Signature of Responsible Official:	Official Title: General Manager	
Typed or Printed Name of Responsible Official: Emiliano Garcia	Phone Number: (303) 925-8500	Date Signed: 7-20-09

- For District Use Only -

Application Number:	*Invoice Number:*	*Permit Number:*	*Company/Facility Number:*

MOJAVE DESERT AIR QUALITY MANAGEMENT DISTRICT
I.C.E. APPLICATION, continued

16. INFORMATION ON I.C.E.:

Manufacturer: Caterpillar - See mfg spec sheets in Appendix C.1

Model No.: 3516C-HDTA Serial No.:

Number of Cylinders: 16 Year of Manufacture:

Rating: 4190 BHP Speed: 1800 RPM

I.C.E. is? [X] New [ ] Existing Date Installed (MM/YYYY):

Prime [ ] Standby [ ] Emergency [X] Portable (Yes or No)?:

CARB engine certification Family: Certification EO#:

Is this engine included in a Demand Response plan?: Yes [ ] No [X]

Type of Fuel(s): Natural Gas [ ] Digester Gas [ ] Ethanol [ ] Landfill Gas [ ]
Propane [ ] CARB Diesel [X] Methanol [ ] Other:

Max fuel usage per hour: 173.3 Fuel units (ft^3, gal, etc.): gal/hr

Engine Lat/Long or UTM Coordinates: see AFC

Exhaust Stack Height (feet): 46 Inside Diameter (inches): 12 Y/N: Vertical? Y Capped? N

Is this I.C.E. (select all that apply): see AFC Appendix C.1

Direct Injected? [ ] After Cooled? [ ]
Turbo Charged? [ ] Inter Cooled? [ ]
Timing Retarded? [ ] Other - Please specify:

17. EMISSION RATES:

Pollutant	at Max.Load	Units	Origin of Emission Rate data: Manufacturer or	Source Test
Oxides of Nitrogen (NOx)	see AFC			
Oxides of Sulfur (SOx)				
Carbon Monoxide (CO)				
Particulates (PM10)				
Total Hydrocarbons (VOC)				

18. EMISSION CONTROL EQUIPMENT: Add on emission control equipment? [ ] Yes [ ] No

If yes: Manufacturer: Model No.:
Serial No.: *CARB EO#:

Type: SCR: [ ] Particulate Trap*: [ ] Ammonia Injection: [ ] Water Injection: [ ]
Non-S CR: [ ] Exhaust Gas Recirc*: [ ] Oxidation Catalyst*: [ ]

Other - Please specify:

19. INFORMATION OF ITEM BEING POWERED: This I.C.E. is used to power:

Electrical Generator [X] Compressor [ ] Pump [ ]
Paint Spray Gun [ ] Conveyor or Drive [ ] Fire Pump [ ]

Other - Please specify:

Manufacturer:

Model No.: Serial No.:

Type, Size or Rating: 2500 kw

MOJAVE DESERT AIR QUALITY MANAGEMENT DISTRICT
14306 Park Avenue, Victorville, CA 92392-2310
(760) 245-1661 Facsimile: (760) 245-2022

www.mdaqmd.ca.gov
Eldon Heaston
Executive Director

APPLICATION FOR INTERNAL COMBUSTION ENGINE (I.C.E.) ONLY

Page 1 of 2: please type or print

REMIT $226.00 WITH THIS DOCUMENT ($129.00 FOR CHANGE OF OWNER)

1. Permit To Be Issued To (company name to receive permit): Mojave Solar LLC		1a. Federal Tax ID No.:
2. Mailing/Billing Address (for above company name): 13911 Park Avenue, Suite 206, Victorville, CA 92392-2407		
3. Facility or Business License Name (for equipment location): Mojave Solar LLC		
4. Facility Address - Location of Equipment (if same as for company, enter "Same"): No address yet, use "same"		Facility UTM or Lat/Long: 470036, 3874396
5. Contact Name/Title: Emiliano Garcia, Manager	Email Address: emiliano.garcia@solar.abengoa.com	Phone/Fax Nos.: P: (303) 925-8500 / F: (303) 928-8510
6. Application is hereby made for Authority To Construct (ATC) and Permit To Operate (PTO) the following equipment: Fire Pump Engine #1		
7. Application is for: [X] New Construction [ ] Modification* [ ] Change of Owner*		For modification or change of owner: *Current Permit Number: _____
8. Type of Organization (check one): [ ] Individual Owner [ ] Partnership [X] Corporation [ ] Utility [ ] Local Agency [ ] State Agency [ ] Federal Agency		
9. Distances (feet and direction to closest): see AFC Fenceline _____ Residence _____ Business _____ School		
10. General Nature of Business: Solar Power Generating Facility	11. Principal Product: Electrical Power	
12. Facility Annual Throughput by Quarters (percent): see AFC % Jan-Mar, % Apr-Jun, % Jul-Sep, % Oct-Dec	13. Expected Operating Hours of IC Engine: see AFC Hrs/Day, Days/Wk, Wks/Yr, Total Hrs/Yr	
14. Do you claim Confidentiality of Data (if yes, state nature of data in attachment)? [ ] Yes [X] No		
15. Signature of Responsible Official:	Official Title: General Manager	
Typed or Printed Name of Responsible Official: Emiliano Garcia	Phone Number: (303) 925-8500	Date Signed: 7-20-09

- For District Use Only -

Application Number:	*Invoice Number:*	*Permit Number:*	*Company/Facility Number:*

MOJAVE DESERT AIR QUALITY MANAGEMENT DISTRICT
I.C.E. APPLICATION, continued

16. INFORMATION ON I.C.E.:

Manufacturer: John Deere - See AFC Appendix C.1 for mfg data

Model No.: 6090H Serial No.: ____

Number of Cylinders: 6 Year of Manufacture: ____

Rating: 346 BHP Speed: ____ RPM

I.C.E. is? [X] New [ ] Existing Date Installed (MM/YYYY): ____

Prime [ ] Standby [ ] Emergency [X] Portable (Yes or No)?: ____

CARB engine certification Family: ____ Certification EO#: ____

Is this engine included in a Demand Response plan?: Yes [ ] No [X]

Type of Fuel(s): Natural Gas [ ] Digester Gas [ ] Ethanol [ ] Landfill Gas [ ]
Propane [ ] CARB Diesel [X] Methanol [ ] Other: ____

Max fuel usage per hour: 7.6 Fuel units (ft^3, gal, etc.): gal/hr

Engine Lat/Long or UTM Coordinates: see AFC

Exhaust Stack Height (feet): 46 Inside Diameter (inches): 8 Y/N: Vertical? Y Capped? N

Is this I.C.E. (select all that apply): see AFC

Direct Injected? [ ] After Cooled? [ ]
Turbo Charged? [ ] Inter Cooled? [ ]
Timing Retarded? [ ] Other - Please specify: ____

17. EMISSION RATES:

Pollutant	at Max.Load	Units	Origin of Emission Rate data: Manufacturer or	Source Test
Oxides of Nitrogen (NOx)	see AFC			
Oxides of Sulfur (SOx)				
Carbon Monoxide (CO)				
Particulates (PM10)				
Total Hydrocarbons (VOC)				

18. EMISSION CONTROL EQUIPMENT: Add on emission control equipment? [ ] Yes [ ] No

If yes: Manufacturer: ____ Model No.:
Serial No.: ____ *CARB EO#: ____

Type: SCR: [ ] Particulate Trap*: [ ] Ammonia Injection: [ ] Water Injection: [ ]
Non-S CR: [ ] Exhaust Gas Recirc*: [ ] Oxidation Catalyst*: [ ]

Other - Please specify: ____

19. INFORMATION OF ITEM BEING POWERED: This I.C.E. is used to power:

Electrical Generator [ ] Compressor [ ] Pump [ ]
Paint Spray Gun [ ] Conveyor or Drive [ ] Fire Pump [X]

Other - Please specify: ____

Manufacturer: ____
Model No.: Serial No.: ____
Type, Size or Rating: ____

MOJAVE DESERT AIR QUALITY MANAGEMENT DISTRICT
14306 Park Avenue, Victorville, CA 92392-2310
(760) 245-1661 Facsimile: (760) 245-2022

www.mdaqmd.ca.gov
Eldon Heaston
Executive Director

APPLICATION FOR INTERNAL COMBUSTION ENGINE (I.C.E.) ONLY

Page 1 of 2: please type or print

REMIT $226.00 WITH THIS DOCUMENT ($129.00 FOR CHANGE OF OWNER)

1. Permit To Be Issued To (company name to receive permit): Mojave Solar LLC		1a. Federal Tax ID No.:
2. Mailing/Billing Address (for above company name): 13911 Park Avenue, Suite 206, Victorville, CA 92392-2407		
3. Facility or Business License Name (for equipment location): Mojave Solar LLC		
4. Facility Address - Location of Equipment (if same as for company, enter "Same"): No address yet, use "same"		Facility UTM or Lat/Long: 470036, 3874396
5. Contact Name/Title: Emiliano Garcia, Manager	Email Address: emiliano.garcia@solar.abengoa.com	Phone/Fax Nos.: P: (303) 925-8500 / F: (303) 928-8510
6. Application is hereby made for Authority To Construct (ATC) and Permit To Operate (PTO) the following equipment: Fire Pump Engine #2		
7. Application is for: [X] New Construction [ ] Modification* [ ] Change of Owner*		For modification or change of owner: *Current Permit Number: _____
8. Type of Organization (check one): [ ] Individual Owner [ ] Partnership [X] Corporation [ ] Utility [ ] Local Agency [ ] State Agency [ ] Federal Agency		
9. Distances (feet and direction to closest): see AFC Fenceline _____ Residence _____ Business _____ School		
10. General Nature of Business: Solar Power Generating Facility	11. Principal Product: Electrical Power	
12. Facility Annual Throughput by Quarters (percent): see AFC % Jan-Mar, % Apr-Jun, % Jul-Sep, % Oct-Dec	13. Expected Operating Hours of IC Engine: see AFC Hrs/Day, Days/Wk, Wks/Yr, Total Hrs/Yr	
14. Do you claim Confidentiality of Data (if yes, state nature of data in attachment)? [ ] Yes [X] No		
15. Signature of Responsible Official:	Official Title: General Manager	
Typed or Printed Name of Responsible Official: Emiliano Garcia	Phone Number: (303) 925-8500	Date Signed: 7-20-09

- For District Use Only -

Application Number:	*Invoice Number:*	*Permit Number:*	*Company/Facility Number:*

MOJAVE DESERT AIR QUALITY MANAGEMENT DISTRICT
I.C.E. APPLICATION, continued

16. INFORMATION ON I.C.E.:

Manufacturer: John Deere - See AFC Appendix C.1 for mfg data

Model No.: 6090H Serial No.: ____

Number of Cylinders: 6 Year of Manufacture: ____

Rating: 346 BHP Speed: ____ RPM

I.C.E. is? [X] New [ ] Existing Date Installed (MM/YYYY): ____

Prime [ ] Standby [ ] Emergency [X] Portable (Yes or No)?: ____

CARB engine certification Family: ____ Certification EO#: ____

Is this engine included in a Demand Response plan?: Yes [ ] No [X]

Type of Fuel(s): Natural Gas [ ] Digester Gas [ ] Ethanol [ ] Landfill Gas [ ]
Propane [ ] CARB Diesel [X] Methanol [ ] Other: ____

Max fuel usage per hour: 7.6 Fuel units (ft^3, gal, etc.): gal/hr

Engine Lat/Long or UTM Coordinates: see AFC

Exhaust Stack Height (feet): 46 Inside Diameter (inches): 8 Y/N: Vertical? Y Capped? N

Is this I.C.E. (select all that apply): see AFC

Direct Injected? [ ] After Cooled? [ ]
Turbo Charged? [ ] Inter Cooled? [ ]
Timing Retarded? [ ] Other - Please specify: ____

17. EMISSION RATES:

Pollutant	at Max.Load	Units	Origin of Emission Rate data: Manufacturer	or Source Test
Oxides of Nitrogen (NOx)	see AFC			
Oxides of Sulfur (SOx)				
Carbon Monoxide (CO)				
Particulates (PM10)				
Total Hydrocarbons (VOC)				

18. EMISSION CONTROL EQUIPMENT: Add on emission control equipment? [ ] Yes [ ] No

If yes: Manufacturer: ____ Model No.:
Serial No.: ____ *CARB EO#: ____

Type: SCR: [ ] Particulate Trap*: [ ] Ammonia Injection: [ ] Water Injection: [ ]
Non-S CR: [ ] Exhaust Gas Recirc*: [ ] Oxidation Catalyst*: [ ]

Other - Please specify: ____

19. INFORMATION OF ITEM BEING POWERED: This I.C.E. is used to power:

Electrical Generator [ ] Compressor [ ] Pump [ ]
Paint Spray Gun [ ] Conveyor or Drive [ ] Fire Pump [X]

Other - Please specify: ____

Manufacturer: ____
Model No.: Serial No.: ____
Type, Size or Rating: ____

APPENDIX J

NOISE

APPENDIX J
ACOUSTIC FUNDAMENTALS

Acoustics is the scientific study that evaluates perception, propagation, absorption, and reflection of sound waves. Sound is a mechanical form of radiant energy, transmitted by a pressure wave through a solid, liquid, or gaseous medium. Sound that is loud, disagreeable, unexpected, or unwanted is generally defined as noise; consequently, the perception of sound is subjective in nature and can vary substantially from person to person. Common sources of environmental noise and noise levels are presented in Table J-1.

A sound wave is initiated in a medium by a vibrating object (e.g., vocal chords, the string of a guitar, the diaphragm of a radio speaker). The wave consists of minute variations in pressure, oscillating above and below the ambient atmospheric pressure. The number of pressure variation cycles occurring per second is referred to as the frequency of the sound wave and is expressed in hertz.

Directly measuring sound pressure fluctuations would require the use of a very large and cumbersome range of numbers. To avoid this and have a more usable numbering system, the decibel (dB) scale was introduced. A sound level expressed in decibels is the logarithmic ratio of two like pressure quantities, with one pressure quantity being a reference sound pressure. For sound pressure in air the standard reference quantity is generally considered to be 20 micropascals, which directly corresponds to the threshold of human hearing. The use of the decibel is a convenient way to handle the millionfold range of sound pressures to which the human ear is sensitive. A decibel is logarithmic; it does not follow normal algebraic methods and cannot be directly added. For example, a 65-dB source of sound, such as a truck, when joined by another 65-dB source results in a sound amplitude of 68 dB, not 130 dB (i.e., doubling the source strength increases the sound pressure by 3 dB). A sound level increase of 10 dB corresponds to 10 times the acoustical energy, and an increase of 20 dB equates to a hundredfold increase in acoustical energy.

The loudness of sound perceived by the human ear depends primarily on the overall sound pressure level and frequency content of the sound source. The human ear is not equally sensitive to loudness at all frequencies in the audible spectrum. To better relate overall sound levels and loudness to human perception, frequency-dependent weighting networks were developed. The standard weighting networks are identified as A through E. There is a strong correlation between the way humans perceive sound and A-weighted sound levels (dBA). For this reason the A-weighted sound level can be used to predict community response to noise from the environment,

including noise from transportation and stationary sources. Sound levels expressed as dB in this section are A-weighted sound levels, unless noted otherwise.

Table J-1. Typical A-Weighted Noise Levels

Common Outdoor Activities	Noise Level (dBA)	Common Indoor Activities
	— 110 —	Rock band
Jet fly-over at 1000 feet		
	— 100 —	
Gas lawn mower at 3 feet		
	— 90 —	
Diesel truck at 50 feet at 50 mph		Food blender at 3 feet
	— 80 —	Garbage disposal at 3 feet
Noisy urban area, daytime		
Gas lawn mower, 100 feet	— 70 —	Vacuum cleaner at 10 feet
Commercial area		Normal speech at 3 feet
Heavy traffic at 300 feet	— 60 —	
		Large business office
Quiet urban daytime	— 50 —	Dishwasher next room
Quiet urban nighttime	— 40 —	Theater, large conference room (background)
Quiet suburban nighttime		
	— 30 —	Library
Quiet rural nighttime		Bedroom at night, concert
	— 20 —	
		Broadcast/recording studio
	— 10 —	
Lowest threshold of human hearing	— 0 —	Lowest threshold of human hearing

Source: Caltrans 2009a

Noise can be generated by a number of sources, including mobile sources (transportation noise sources) such as automobiles, trucks, and airplanes and stationary sources (nontransportation

noise sources) such as construction sites, machinery, and commercial and industrial operations. As acoustic energy spreads through the atmosphere from the source to the receiver, noise levels attenuate (decrease) depending on ground absorption characteristics, atmospheric conditions, and the presence of physical barriers (walls, building facades, berms). Noise generated from mobile sources generally attenuate at a rate of 4.5 dB per doubling of distance (dB/DD). Stationary noise sources spread with more spherical dispersion patterns that attenuate at a rate of 6 dB to 7.5 dB/DD.

Atmospheric conditions such as wind speed, turbulence, temperature gradients, and humidity may additionally alter the propagation of noise and affect levels at a receiver. Furthermore, the presence of a large object (e.g., barrier, topographic features, and intervening building façades) between the source and the receptor can provide significant attenuation of noise levels at the receiver. The amount of noise level reduction or "shielding" provided by a barrier primarily depends on the size of the barrier, the location of the barrier in relation to the source and receivers, and the frequency spectra of the noise. Natural barriers such as berms, hills, or dense woods, and human-made features such as buildings and walls may be used as noise barriers.

Noise Descriptors

The intensity of environmental noise fluctuates over time, and several different descriptors of time-averaged noise levels are used. The selection of a proper noise descriptor for a specific source depends on the spatial and temporal distribution, duration, and fluctuation of both the noise source and the environment. The noise descriptors most often used to describe environmental noise are defined below:

- $\mathbf{L_{max}}$ (Maximum Noise Level): The highest A/B/C weighted integrated noise level occurring during a specific period of time.
- $\mathbf{L_{min}}$ (Minimum Noise Level): The lowest A/B/C weighted integrated noise level during a specific period of time.
- **Peak**: The highest weighted or unweighted instantaneous peak-to-peak value occurring during a measurement period.
- $\mathbf{L_n}$ (Statistical Descriptor): The noise level exceeded n% of a specific period of time, generally accepted as an hourly statistic. An L_{10} would be the noise level exceeded 10% of the measurement period.
- $\mathbf{L_{eq}}$ (Equivalent Noise Level): The energy mean (average) noise level. The steady state sound level which, in a specified period of time contains the same acoustical energy as a varying sound level over the same time period.

- **L_{dn}** (Day-Night Noise Level): The 24-hour L_{eq} with a 10-dB "penalty" applied during nighttime noise-sensitive hours, 10:00 p.m. through 7:00 a.m. The L_{dn} attempts to account for the fact that noise during this specific period of time is a potential source of disturbance with respect to normal sleeping hours.
- **CNEL** (Community Noise Equivalent Level): The CNEL is similar to the L_{dn} described above, but with an additional 5-dB "penalty" for the noise-sensitive hours between 7:00 p.m. to 10:00 p.m., which are typically reserved for relaxation, conversation, reading, and television. If using the same 24-hour noise data, the CNEL is typically 0.5 dB higher than the L_{dn}.
- **SEL** (Sound Exposure Level): The SEL describes the cumulative exposure to sound energy over a stated period of time.
- **SENEL** (Single Event Noise Exposure Level): An SEL where the measurement period is defined by the start and end times of a single noise event, such as an automobile passby, aircraft flyover, or individual industrial operations.

EFFECTS OF NOISE ON HUMANS

Excessive and chronic exposure to elevated noise levels can result in auditory and nonauditory effects in humans. Auditory effects of noise on people are those relating to temporary or permanent hearing loss caused by loud noises. Nonauditory effects of exposure to elevated noise levels are those relating to behavioral and physiological effects. The nonauditory behavioral effects of noise on humans is primarily associated with the subjective effects of annoyance, nuisance, and dissatisfaction; which lead to interference with activities such as communications, sleep, and learning. The nonauditory physiological health effects of noise on humans has been the subject of considerable research efforts attempting to discover correlations between exposure to elevated noise levels and health problems, such as hypertension and cardiovascular disease. The mass of research infers that noise-related health issues are predominantly the result of behavioral stressors and not a direct noise-induced response. The extent to which noise contributes to nonauditory health effects remains a subject of considerable research, with no definitive conclusions.

The degree to which noise results in annoyance and interference is highly subjective and may be influenced by a number of nonacoustic factors. The number and effect of these nonacoustic environmental and physical factors vary depending on individual characteristics of the noise environment such as sensitivity, level of activity, location, time of day, and length of exposure. One key aspect in the prediction of human response to new noise environments is the individual level of adaptation to an existing noise environment. The greater the change in the noise levels that are attributed to a new noise source, relative to the environment an individual has become accustomed too, the less tolerable the new noise source will be viewed.

A change in sound level of 1 dB is generally not perceivable by humans, excluding controlled conditions and pure tones. Outside of controlled laboratory conditions the average human ear barely perceives a change of 3 dB. A change of 5 dB generally fosters a noticeable change in human response, and an increase of 10 dB is subjectively heard as a doubling of loudness.

APPENDIX K

GEOLOGY AND SOILS

GEOTECHNICAL EVALUATION
MOJAVE SOLAR PROJECT
LOCKHART, CALIFORNIA

PREPARED FOR:
Mojave Solar, LLC
13911 Park Avenue, Suite 206
Victorville, California 92392

PREPARED BY:
Ninyo & Moore
Geotechnical and Environmental Sciences Consultants
5710 Ruffin Road
San Diego, California 92123

May 15, 2009
Project No. 105879004

The Geotechnical Evaluation is on file
with the US Department of Energy. Contact:
Carol Hammel-Smith, 202-287-5655

APPENDIX L

PALEONTOLOGY STUDY

Errata Notice

Following publication of this report by SWCA, new project description information was developed by SCE. In particular, the 55 new poles between Lockhart Substation and Harper Lake Road are no longer needed; existing transmission line structures will be used for cable installation. The figures in this report have been annotated regarding this change.

Paleontological Resources Assessment in Support of the Environmental Assessment of the Abengoa Mojave Solar Project, San Bernardino County, California

Prepared for

AECOM

Prepared by

SWCA Environmental Consultants

Pasadena Office

June 2010

PALEONTOLOGICAL RESOURCES ASSESSMENT IN SUPPORT OF THE ENVIRONMENTAL ASSESSMENT OF THE ABENGOA MOJAVE SOLAR PROJECT; SAN BERNARDINO COUNTY, CALIFORNIA

SWCA PROJECT NUMBER 16646

SUBMITTED TO:
AECOM
1420 Kettner Boulevard, Suite 500
San Diego, California 92101

SUBMITTED BY:
SWCA Environmental Consultants
625 Fair Oaks Avenue, Suite 190
South Pasadena, California 91030

Jessica L. DeBusk, SWCA Project Manager and Paleontology Lead

Cara Corsetti, SWCA Office Principal and Qualified Paleontologist

PROJECT SUMMARY

PURPOSE AND SCOPE

SWCA Environmental Consultants was retained by AECOM to conduct paleontological resources management services in support of the Environmental Assessment (EA) of the Abengoa Mojave Solar Project (AMSP) located near Barstow in San Bernardino County, California. A paleontological resources assessment of the AMSP site was conducted by SWCA in July 2009 (DeBusk and Corsetti, 2009). The current study addresses the paleontological resource potential of associated supporting infrastructure for the AMSP, hereinafter referred to as the "project area." The scope of services for the current study included a comprehensive museum records search and literature review and preparation of this technical report of findings that includes recommended mitigation measures.

DATES OF INVESTIGATION

The museum records search was performed on May 7, 2010. This technical report was completed in June 2010.

RESULTS OF THE INVESTIGATION

Geologic mapping by Bortugno and Spittler (1986) and Dibblee (2008a; 2008b) indicate that the project area is underlain by the following geologic units, in approximate ascending stratigraphic order: (1) the Tropico Group of Miocene age (23 million years ago [Ma] to 5.3 Ma), (2) older Quaternary alluvial deposits of Pleistocene age (1.8 Ma to 10,000 years before present [BP]), and (3) younger alluvium of Holocene age (10,000 years BP to Recent). Museum collections records maintained by the San Bernardino County Museum (SBCM) indicate that 18 previously recorded potential fossil localities exist within the project area and immediate vicinity. In addition, numerous vertebrate fossil localities have been recorded throughout the region within the same or similar sedimentary deposits that occur within the project area.

The combined results of the museum records search and literature review indicate that geologic units underlying the project area have a paleontological sensitivity ranging from low to high. Therefore, development of the AMSP may potentially result in direct adverse impacts to nonrenewable fossil resources and will require implementation of paleontological resources mitigation measures to reduce such impacts to a less-than-significant level.

RECOMMENDATIONS

SWCA recommends that a qualified paleontologist be retained to design and implement a paleontological resources monitoring and mitigation plan (PRMMP) for areas where ground disturbance is proposed. All significant fossils recovered during construction monitoring should be prepared, stabilized, identified, and permanently curated in an approved repository or museum such as the SBCM.

DISPOSITION OF DATA

This report will be filed with AECOM. A copy will be retained at SWCA Environmental Consultants, along with all other records relating to the project.

TABLE OF CONTENTS

PROJECT SUMMARY ..... **i**
Purpose and Scope i
Dates of Investigation i
Results of the Investigation i
Recommendations i
Disposition of Data i
INTRODUCTION **4**
Definition and Significance of Paleontological Resources 4
LAWS, ORDINANCES, REGULATIONS, AND STANDARDS **4**
National Environmental Policy Act 5
Federal Land Policy and Management Act 5
American Antiquities Act 5
National Historic Preservation Act 5
Code of Federal Regulations Title 43 6
Department of the Interior Report—Fossils on Federal and Indian Lands 6
Professional Standards 6
RESOURCE ASSESSMENT Summary **7**
PROJECT LOCATION AND DESCRIPTION **8**
PROJECT PERSONNEL **10**
METHODS **11**
Museum Records Search 11
GEOLOGY AND PALEONTOLOGY **11**
Geologic Setting 11
Site-specific Geology and Paleontology 12
Tropico Group 12
Quaternary Older Alluvium 16
Quaternary Younger Alluvium 16
ANALYSIS AND RESULTS **16**
Museum Records Search 16
CONCLUSIONS **18**
RECOMMENDED MITIGATION MEASURES **18**
Preconstruction Assessment, Survey, and Excavation 18
Survey 18
Sampling 19
Salvage 19
Avoidance 19
Construction Monitoring 19
Fossil Preparation and Curation 20
Reporting 20
REFERENCES **21**

LIST OF FIGURES

Figure 1. Project Overview Map 9
Figure 2. Geologic and Paleontological Sensitivity Map 1 of 3 13
Figure 3. Geologic and Paleontological Sensitivity Map 2 of 3 14

Figure 4. Geologic and Paleontological Sensitivity Map 3 of 3 15
Figure 5. Index Map of Confidential Localities 1
Figure 6. Confidential Localities Map 1 of 2 2
Figure 7. Confidential Localities Map 2 of 2 3

LIST OF TABLES

Table 1. Geologic Units within the Project Area 16
Table 2. Previously Recorded Fossil Localities within Project Area and Vicinity 17

APPENDIX

Confidential Appendix A: Paleontological Localities

INTRODUCTION

This report presents the findings of a comprehensive literature review and museum records search conducted in support of the Environmental Assessment of the Abengoa Mojave Solar Project (AMSP) located near Barstow, San Bernardino County, California. This study was performed to evaluate the paleontological sensitivity of the project area and vicinity, assess potential project-related environmental impacts on paleontological resources, and provide recommendations for the management of paleontological resources. This study was conducted in accordance with the professional guidelines established by the Society of Vertebrate Paleontology (SVP) (1995).

DEFINITION AND SIGNIFICANCE OF PALEONTOLOGICAL RESOURCES

Paleontology is a multidisciplinary science that combines elements of geology, biology, chemistry, and physics in an effort to understand the history of life on earth. Paleontological resources, or fossils, are the remains, imprints, or traces of once-living organisms preserved in rocks and sediments. These include mineralized, partially mineralized, or unmineralized bones and teeth, soft tissues, shells, wood, leaf impressions, footprints, burrows, and microscopic remains. The fossil record is the only evidence that life on earth has existed for more than 3.6 billion years. Fossils are considered nonrenewable resources because the organisms they represent no longer exist. Thus, once destroyed, a fossil can never be replaced. Fossils are an important scientific and educational resource because they are used to:

- Study the phylogenetic relationships between extinct organisms, as well as their relationships to modern groups.
- Elucidate the taphonomic, behavioral, temporal, and diagenetic pathways responsible for fossil preservation, including biases in the fossil record.
- Reconstruct ancient environments, climate change, and paleoecological relationships.
- Provide a measure of relative geologic dating, which forms the basis for biochronology and biostratigraphy, and which is an independent and supporting line of evidence for isotopic dating.
- Study the geographic distribution of organisms and tectonic movements of land masses and ocean basins through time.
- Study patterns and processes of evolution, extinction, and speciation.
- Identify past and potential future human-caused effects to global environments and climates (Murphey and Daitch, 2007).

LAWS, ORDINANCES, REGULATIONS, AND STANDARDS

Fossils are classified as nonrenewable scientific resources and are protected by various laws, ordinances, regulations, and standards (LORS) across the country. Professional standards for the assessment and mitigation of adverse impacts on paleontological resources have been established by the SVP (1995, 1996). Federal protections for scientifically significant paleontological resources apply to projects if any construction or other related project impacts occur on federally owned or managed lands, involve the crossing of state lines, or are federally funded. Federal protections would apply to paleontological resources within the area of potential effect (APE) for this project because it is in part federally funded and because a portion of the project area crosses federal lands administered by the Bureau of Land Management (BLM). Pertinent federal LORS are summarized in the following sections.

NATIONAL ENVIRONMENTAL POLICY ACT

The National Environmental Policy Act (NEPA) of 1969, as amended (Pub. L. 91-190, 42 USC 4321-4347, January 1, 1970, as amended by Pub. L. 94-52, July 3, 1975, Pub. L. 94-83, August 9, 1975, and Pub. L. 97-258 § 4(b), Sept. 13, 1982) recognizes the continuing responsibility of the Federal Government to "preserve important historic, cultural, and natural aspects of our national heritage..." (Sec. 101 [42 USC § 4321]) (#382).

The goal of the NEPA process is to make informed, publicly supported decisions regarding environmental issues. Under NEPA, the Federal Government requires that:

a) all federal agencies consider the environmental impacts of proposed actions;

b) the public be informed of the potential environmental impacts of proposed actions; and

c) that the public be involved in planning and analysis relevant to actions that impact the environment.

FEDERAL LAND POLICY AND MANAGEMENT ACT

The Federal Land Policy and Management Act (FLPMA) of 1976 (43 USC 1712[c], 1732[b]); sec. 2, Federal Land Policy and Management Act of 1962 [30 USC 611]; Subpart 3631.0 et seq.), Federal Register Vol. 47, No. 159, 1982 does not refer specifically to fossils. However, "significant fossils" are understood and recognized in policy as scientific resources. Permits that authorize the collection of significant fossils for scientific purposes are issued under the authority of FLPMA.

Under FLPMA, federal agencies are charged to:

a) manage public lands in a manner that protects the quality of scientific, scenic, historical, ecological, environmental, air and atmospheric, archaeological, and water resources, and, where appropriate, preserve and protect certain public lands in their natural condition (Section 102[a][8] [11]);

b) periodically inventory public lands so that the data can be used to make informed land-use decisions (Section 102[a][2]); and

c) regulate the use and development of public lands and resources through easements, licenses, and permits (Section 302[b]).

AMERICAN ANTIQUITIES ACT

The American Antiquities Act of 1906 1 (6 USC 431 433) establishes a penalty for disturbing or excavating any historic or prehistoric ruin or monument or object of antiquity on federal lands as a maximum fine of $500 or 90 days in jail.

NATIONAL HISTORIC PRESERVATION ACT

The National Historic Preservation Act of 1966 (Pub. L. 89 665; 80 Stat. 915, 16 U.S.C. 470 et seq.) provides for the survey, recovery, and preservation of significant paleontological data when such data may be destroyed or lost due to a federal, federally licensed, or federally funded project.

CODE OF FEDERAL REGULATIONS TITLE 43

Under the Code of Federal Regulations (CFR) Title 43, Section 8365.1-5, the collection of scientific resources, including vertebrate fossils, is prohibited without a permit. Except where prohibited, individuals are also authorized to collect some fossils for their personal use. The use of fossils found on federal lands for commercial purposes is also prohibited.

DEPARTMENT OF THE INTERIOR REPORT—FOSSILS ON FEDERAL AND INDIAN LANDS

In 2000, the Secretary of the Interior submitted a report to Congress titled "Assessment of Fossil Management on Federal and Indian Lands." This report was prepared with the assistance of eight federal agencies including the Bureau of Indian Affairs, the Bureau of Land Management (BLM), the Bureau of Reclamation, the United States Fish and Wildlife Service, the United States Forest Service (USFS), the National Park Service, the U.S. Geological Survey (USGS), and the Smithsonian Institution. The consulting agencies concluded that administrative and Congressional actions with respect to fossils should be governed by these seven basic principles:

a) Fossils on federal land are a part of America's heritage.

b) Most vertebrate fossils are rare.

c) Some invertebrate and plant fossils are rare.

d) Penalties for fossil theft should be strengthened.

e) Effective stewardship requires accurate information.

f) Federal fossil collections should be preserved and available for research and public education.

g) Federal fossil management should emphasize opportunities for public involvement.

PROFESSIONAL STANDARDS

The SVP has established standard guidelines (SVP, 1995) that outline professional protocols and practices for the conducting of paleontological resource assessments and surveys, monitoring and mitigation, data and fossil recovery, sampling procedures, and specimen preparation, identification, analysis, and curation. Most practicing professional vertebrate paleontologists adhere closely to the SVP's assessment, mitigation, and monitoring requirements as specifically provided in its standard guidelines. Typically, state regulatory agencies with paleontological LORS accept and use the professional standards set forth by the SVP.

As defined by the SVP (1995:26), significant nonrenewable paleontological resources are defined as:

> …Fossils and fossiliferous deposits here restricted to vertebrate fossils and their taphonomic and associated environmental indicators. This definition excludes invertebrate or paleobotanical fossils except when present within a given vertebrate assemblage. Certain invertebrate and plant fossils may be defined as significant by a project paleontologist, local paleontologist, specialists, or special interest groups, or by lead agencies or local governments.

As defined by the SVP (1995:26), significant fossiliferous deposits are defined as:

> A rock unit or formation which contains significant nonrenewable paleontologic resources, here defined as comprising one or more identifiable vertebrate fossils, large or small, and any associated invertebrate and plant fossils, traces and other data that provide taphonomic, taxonomic, phylogenetic, ecologic, and stratigraphic information (ichnites and trace fossils generated by vertebrate animals, e.g., trackways, or nests and middens which provide datable material and climatic information). Paleontologic resources are considered to be older than recorded history and/or older than 5,000 years, BP [before present].

Based on the significance definitions of the SVP (1995), all identifiable vertebrate fossils are considered to have significant scientific value. This position is adhered to because vertebrate fossils are relatively uncommon, and only rarely will a fossil locality yield a statistically significant number of specimens of the same genus. Therefore, every vertebrate fossil found has the potential to provide significant new information on the taxon it represents, its paleoenvironment, and/or its distribution. Furthermore, all geologic units in which vertebrate fossils have previously been found are considered to have high sensitivity. Identifiable plant and invertebrate fossils are considered significant if found in association with vertebrate fossils or if defined as significant by project paleontologists, specialists, or local government agencies.

A geologic unit known to contain significant fossils is considered to be "sensitive" to adverse impacts if there is a high probability that earth-moving or ground-disturbing activities in that rock unit will either disturb or destroy fossil remains directly or indirectly. This definition of sensitivity differs fundamentally from that for archaeological resources as follows:

> It is extremely important to distinguish between archaeological and paleontological (fossil) resource sites when defining the sensitivity of rock units. The boundaries of archaeological sites define the areal extent of the resource. Paleontologic sites, however, indicate that the containing sedimentary rock unit or formation is fossiliferous. The limits of the entire rock formation, both areal and stratigraphic, therefore define the scope of the paleontologic potential in each case. [SVP, 1995]

Many archaeological sites contain features that are visually detectable on the surface. In contrast, fossils are contained within surficial sediments or bedrock and are therefore not observable or detectable unless exposed by erosion or human activity. Monitoring by experienced paleontologists greatly increases the probability that fossils will be discovered during ground-disturbing activities and that, if these remains are significant, successful mitigation and salvage efforts may be undertaken to prevent adverse impacts to these resources.

RESOURCE ASSESSMENT SUMMARY

Paleontological sensitivity is defined as the potential for a geologic unit to produce scientifically significant fossils. This is determined by rock type, past history of the geologic unit in producing significant fossils, and fossil localities recorded from that unit. Paleontological sensitivity is derived from the known fossil data collected from the entire geologic unit, not just from a specific survey. In its "Standard Guidelines for the Assessment and Mitigation of Adverse Impacts to Nonrenewable Paleontologic Resources," the SVP (1995:23) defines three categories of paleontological sensitivity (potential) for sedimentary rock units: high, low, and undetermined:

- **High Potential.** Rock units from which vertebrate or significant invertebrate fossils or suites of plant fossils have been recovered and are considered to have a high potential for containing significant nonrenewable fossiliferous resources. These units include, but are not limited to, sedimentary formations and some volcanic formations that contain significant nonrenewable paleontologic resources anywhere within their geographical extent and sedimentary rock units temporally or lithologically suitable for the preservation of fossils. Sensitivity comprises both (a) the potential for yielding abundant or significant vertebrate fossils or for yielding a few significant fossils, large or small, vertebrate, invertebrate, or botanical, and (b) the importance of recovered evidence for new and significant taxonomic, phylogenetic, ecologic, or stratigraphic data. Areas that contain potentially datable organic remains older than Recent, including deposits associated with nests or middens, and areas that may contain new vertebrate deposits, traces, or trackways are also classified as significant.
- **Low Potential.** Reports in the paleontological literature or field surveys by a qualified vertebrate paleontologist may allow determination that some areas or units have low potentials for yielding significant fossils. Such units will be poorly represented by specimens in institutional collections.
- **Undetermined Potential.** Specific areas underlain by sedimentary rock units for which little information is available are considered to have undetermined fossiliferous potentials.

It should be noted that highly metamorphosed rocks and granitic rock units do not generally yield fossils and therefore have low potential to yield significant nonrenewable fossiliferous resources.

In general terms, for geologic units with high potential, full-time monitoring typically is recommended during any project-related ground disturbance. For geologic units with low potential, protection or salvage efforts typically are not required. For geologic units with undetermined potential, field surveys by a qualified paleontologist are usually recommended to specifically determine the paleontologic potential of the rock units present within the study area.

PROJECT LOCATION AND DESCRIPTION

The AMSP is located in unincorporated San Bernardino County approximately 9 miles northwest of Hinkley, California (Figure 1). It would have a combined nominal electrical output of 250 megawatts (MW) from twin 125-MW power blocks. The power blocks would be joined at the transmission line interconnection substation to form one full-output transmission interconnection. The project interconnection is proposed to connect to the Southern California Edison (SCE)-owned Kramer-Coolwater 230-kV transmission line located adjacent to the southern border of the project. SCE would lead the permitting effort for the transmission improvements past the project-specific interconnection to the statewide system as a separate process. All project-related transmission facilities are within the project boundaries. Natural gas for the project's ancillary purposes would be supplied by a Southern California Gas Company-owned pipeline that runs to the project boundary.

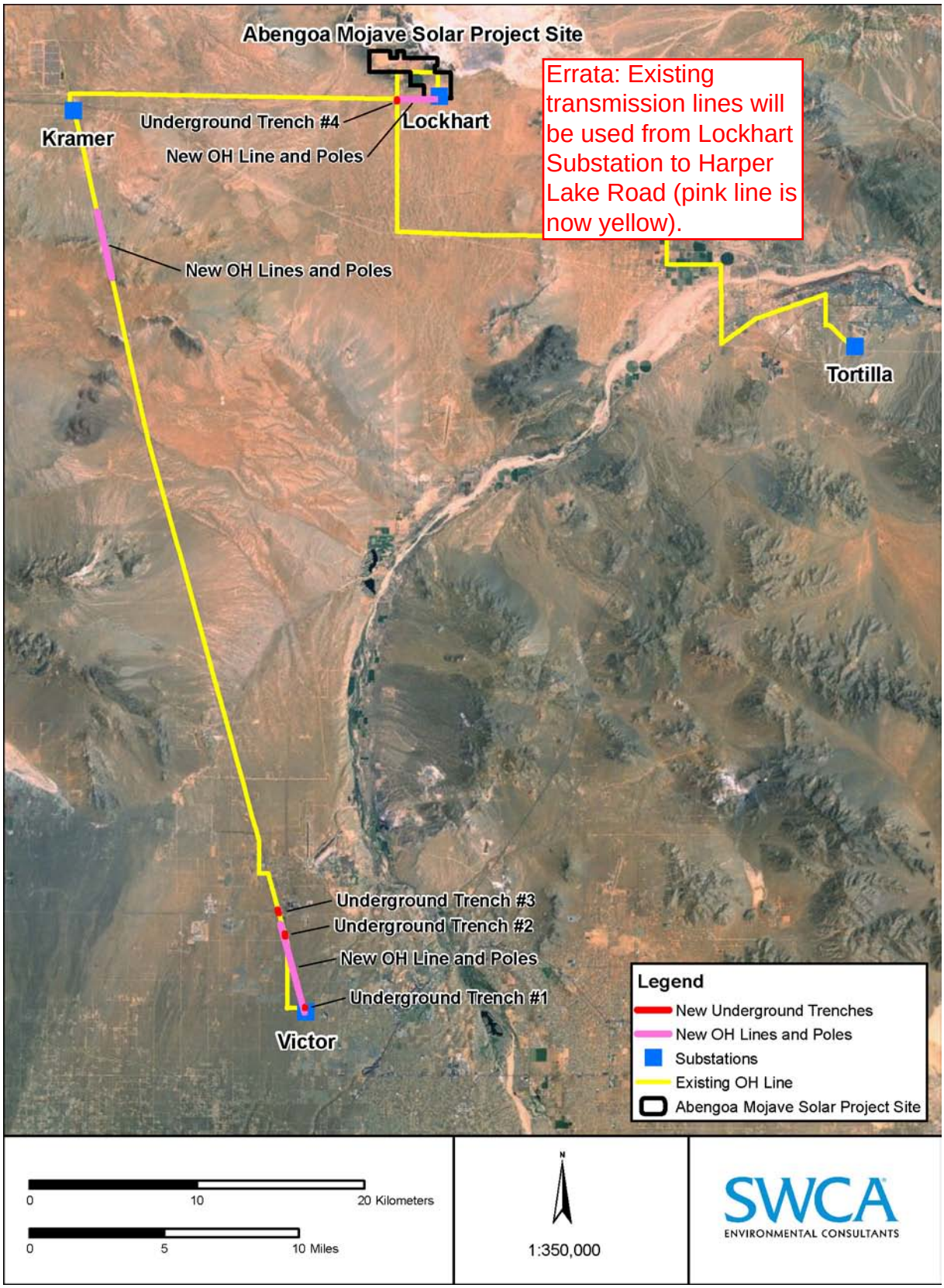

Figure 1. Project Overview Map

The AMSP project includes approximately 31 miles of new fiber-optic cable to be installed between the proposed Lockhart Substation and the existing Tortilla Substation, located to the southeast in Barstow (See Figure 1).The fiber-optic cable would require the construction of approximately 55 new poles between the Lockhart Substation and Harper Lake Road. The new underground trench would be located within the disturbed road ROW of Harper Lake Road, on the east side of the road, before transitioning to the west side of the road. From this point, the underground cable would transition back to the overhead line via a riser to existing overhead transmission line poles that parallel Harper Lake Road for approximately 5 miles south. This method, stringing the cable on existing transmission line structures, would continue between the intersection of Harper Lake Road/SR-58 heading east, then south on Summerset Road, east on Community Road, and south on Lenwood and Sun Valley roads until intersecting with an existing 33-kV transmission line located approximately one-third mile south of Main Street. The cable would be strung on the existing transmission line structures (called the Poco 33-kV line) for approximately 4.7 miles, then would continue to be strung on existing transmission line structures south on I Street. Where the overhead line intersects Bonanza Road, the cable would be strung on existing transmission line structures heading east along Bonanza Road until intersecting with the existing SCE Kramer-Tortilla 115-kV transmission line.

Fiber-optic cable between the Lockhart Substation and Kramer Substation commences with trenching within the substation site to install the cable in an underground conduit approximately 1,000 feet long until it reaches the overhead poles for the proposed substation light and power lines. These overhead poles, approximately 30 in number, would be new poles proposed within the AMSP property between the substation and Lockhart Road to the north. The cable would then be strung along existing power and transmission line structures until it intersects with the existing Kramer Substation, where it would transition to an underground conduit.

Fiber-optic cable connecting the Kramer Substation to Victor Substation would commence at Kramer Substation by installing cable in both a new underground conduit and existing underground conduit. It would then transition to, and be strung on, the existing Kramer-Victor 115-kV transmission line for a majority of this alignment. There are areas where the cable would need to be installed underground where the 115-kV line crosses other transmission lines. One trench would be located just north of the Victor Substation (See Figure 1), where the cable would be installed in an underground trench underneath SR-18 and stretch 225 feet. Two other areas, farther north near U.S. Highway 395, consist of 500 linear feet each (See Figure 1). Trenching would also be located within the Roadway and Kramer Substation boundaries, within the disturbed footprint of those existing facilities (See Figure 1). In addition, approximately 30 new poles would be required in two main areas along this alignment, as shown in Figure 1.

For the purposes of this study, the “project area” includes proposed areas of ground disturbance where underground trenching for new cable installation and grading or excavations are anticipated during the installation of new poles.

PROJECT PERSONNEL

SWCA Paleontology Lead Jessica DeBusk managed this project and authored this technical report. Geographic Information Systems (GIS) Specialist Chad Flynn produced graphics. Technical Editor Elizabeth Slocum edited and formatted this report. Cara Corsetti, Qualified Paleontologist and SWCA Office Principal, provided quality review/quality assurance (QA/QC) review of this technical report.

METHODS

Due to the nature of the fossil record, paleontologists cannot know either the quality or the quantity of fossils present in a given geologic unit prior to natural erosion or human-caused exposure. Therefore, in the absence of surface fossils, it is necessary to assess the sensitivity of rock units based on their known potential to produce scientifically significant fossils elsewhere within the same geologic unit (both within and outside of the study area) or a unit representative of the same depositional environment.

MUSEUM RECORDS SEARCH

For this project, a museum records search was performed by the Department of Earth Sciences at the San Bernardino County Museum (SBCM). Museum collections records were searched for the purposes of determining whether there are any known fossil localities in or near the project site, identifying the geologic units present in the project area, and determining the paleontological sensitivity ratings of those geologic units to assess potential impacts to nonrenewable paleontological resources. Published and unpublished literature and geologic maps were reviewed, and mitigation measures specific to this project were developed in accordance with the SVP's professional standards and guidelines (1995).

Geologic units were assigned a paleontological sensitivity rating based on the museum records search and literature review. For the purpose of this study, geologic units and paleontological sensitivity are mapped for those areas where ground disturbance is proposed (See Figures 2 through 4).

GEOLOGY AND PALEONTOLOGY

GEOLOGIC SETTING

California is naturally divided into the following 12 geomorphic provinces, each distinguished from one another by having unique topographic features and geologic formations: (1) the Sierra Nevada, (2) the Klamath Mountains, (3) the Cascade Range, (4) the Modoc Plateau, (5) the Basin and Range, (6) the Mojave Desert, (7) the Colorado Desert, (8) the Peninsular Ranges, (9) the Transverse Ranges, (10) the Coast Ranges, (11) the Great Valley, and (12) the Offshore area. The AMSP, substation, interconnect and fiber-optic routes are located in the western region of the Mojave Desert geomorphic province. The Mojave Desert is bounded to the northwest by the Transverse Ranges and to the southwest by the Colorado Desert. The Sierra Nevada and the Basin and Ranges provinces establish the northern boundary and the Nevada state line and Colorado River establish the eastern boundary (Norris and Webb, 1976).

The Mojave Desert is an elevated alluvial plain located on a wedge-shaped fault block bounded by the San Andreas and Garlock fault zones to the southwest and north, respectively. The western Mojave Desert is characterized by three major rock groups. The first is the basement complex consisting of a pre-Tertiary granitoid batholith believed to be an extension of the Sierra Nevada batholith (Dibblee, 1967). The second is Tertiary-age sedimentary and volcanic rocks mostly of terrestrial origin and consisting of conglomerates, sandstones, shales, carbonates, tuffs and breccias, lava flows, and basaltic and rhyolitic plugs. The third major rock assemblage in the western Mojave Desert is composed of Quaternary alluvial, fluvial, and playa, or lakebed, deposits. Quaternary-age alluvial sediments, largely derived from the San Gabriel and Sierra Nevada mountains, were deposited either conformably or, more commonly, unconformably on top of Tertiary- and pre-Tertiary-age rocks. The depth of alluvial deposition ranges from a few feet to possibly several thousand feet in thickness. Both Quaternary and Tertiary-age deposits underlie the project area; these units are discussed in more detail below.

SITE-SPECIFIC GEOLOGY AND PALEONTOLOGY

The geology in the project area has been mapped by Bortugno and Spittler (1986) at a scale of 1:250,000 and Dibblee (2008a; 2008b) at a scale of 1:62,500. No larger-scale maps (1:24,000) were available for this analysis. Geologic mapping by Bortugno and Spittler (1986) and Dibblee (2008a; 2008b) indicate that the project area is underlain by the following geologic units, in approximate ascending stratigraphic order: (1) the Tropico Group of Miocene age (23 million years old [Ma] to 5.3 Ma, (2) older Quaternary alluvial deposits of Pleistocene age (1.8 Ma to 10,000 years before present [BP]), and (3) younger alluvium of Holocene age (10,000 years BP to Recent).

Tropico Group

The Tropico Group is made up of Tertiary age non-marine and volcanic rocks scattered throughout the western Mojave Desert, exposed mostly in the vicinities of Rosamond, Mojave, and Boron. The group has a maximum exposed thickness of 2,800 feet and is divided into several lithological units of local extent. In general, its lower part is composed of tuffaceous material of rhyolitic composition, and its upper part is composed of coarse stream-laid or fine lacustrine sediments (or both). The Tropico Group overlies the deeply eroded surface of pre-Tertiary granitic basement rocks and is unconformably overlain by Quaternary age alluvial sediments (Dibblee, 1958).

According to geologic mapping by Dibblee (2008a), the Project area traverses a small portion of a basalt unit within the lower part of the Tropico Group in the vicinity of Kramer Hills (See Figure 3). This unit, mapped as “Tb,” is composed of black non-vesicular massive olivine basalt occurring locally as flows or sills up to 300 feet in thickness. Most volcanic rocks do not have the potential to contain paleontological resources and are not generally suitable for the preservation of fossils due to their molten origin. Therefore, “Tb” is assigned a “low” sensitivity.

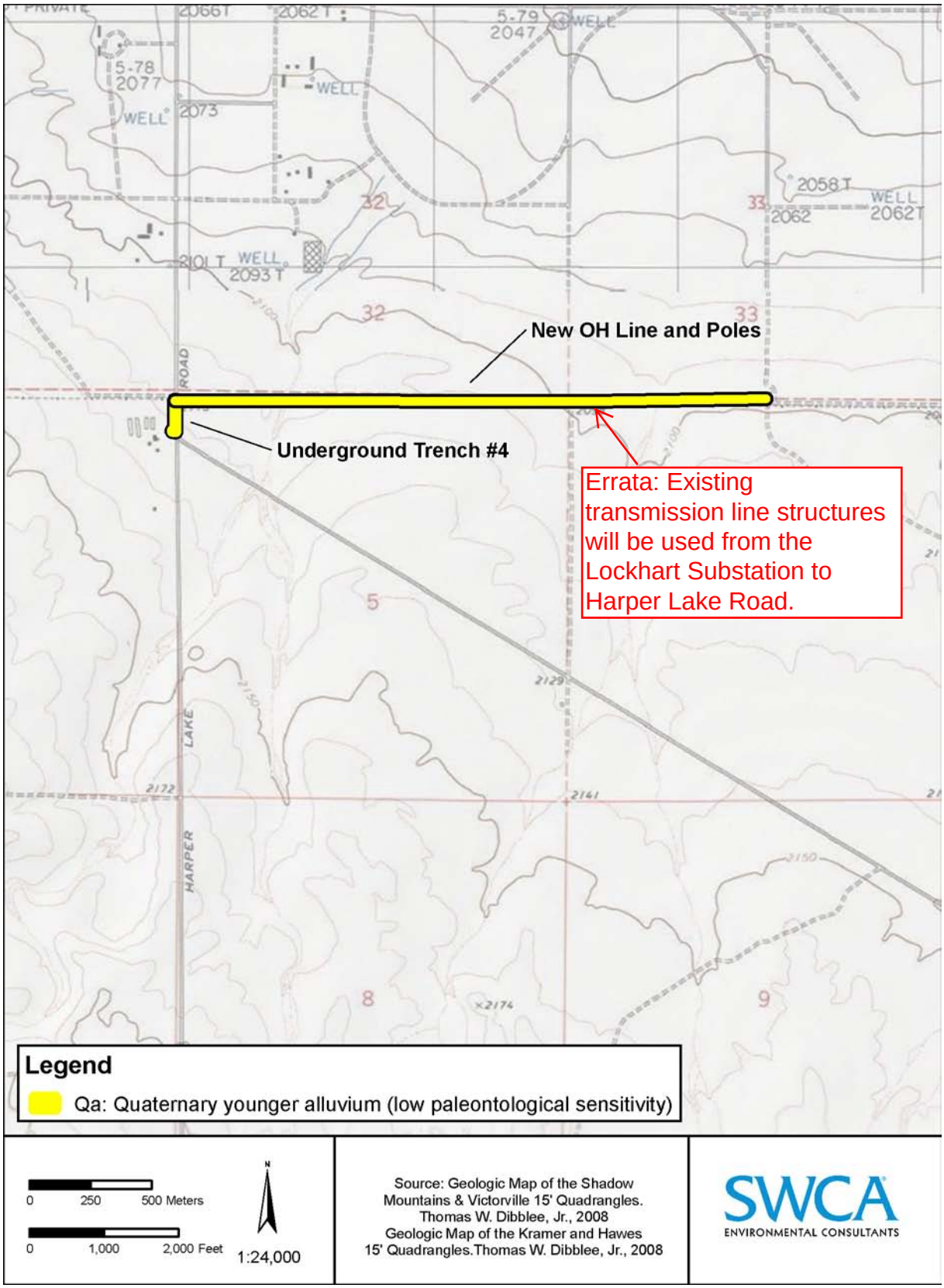

Figure 2. Geologic and Paleontological Sensitivity Map 1 of 3

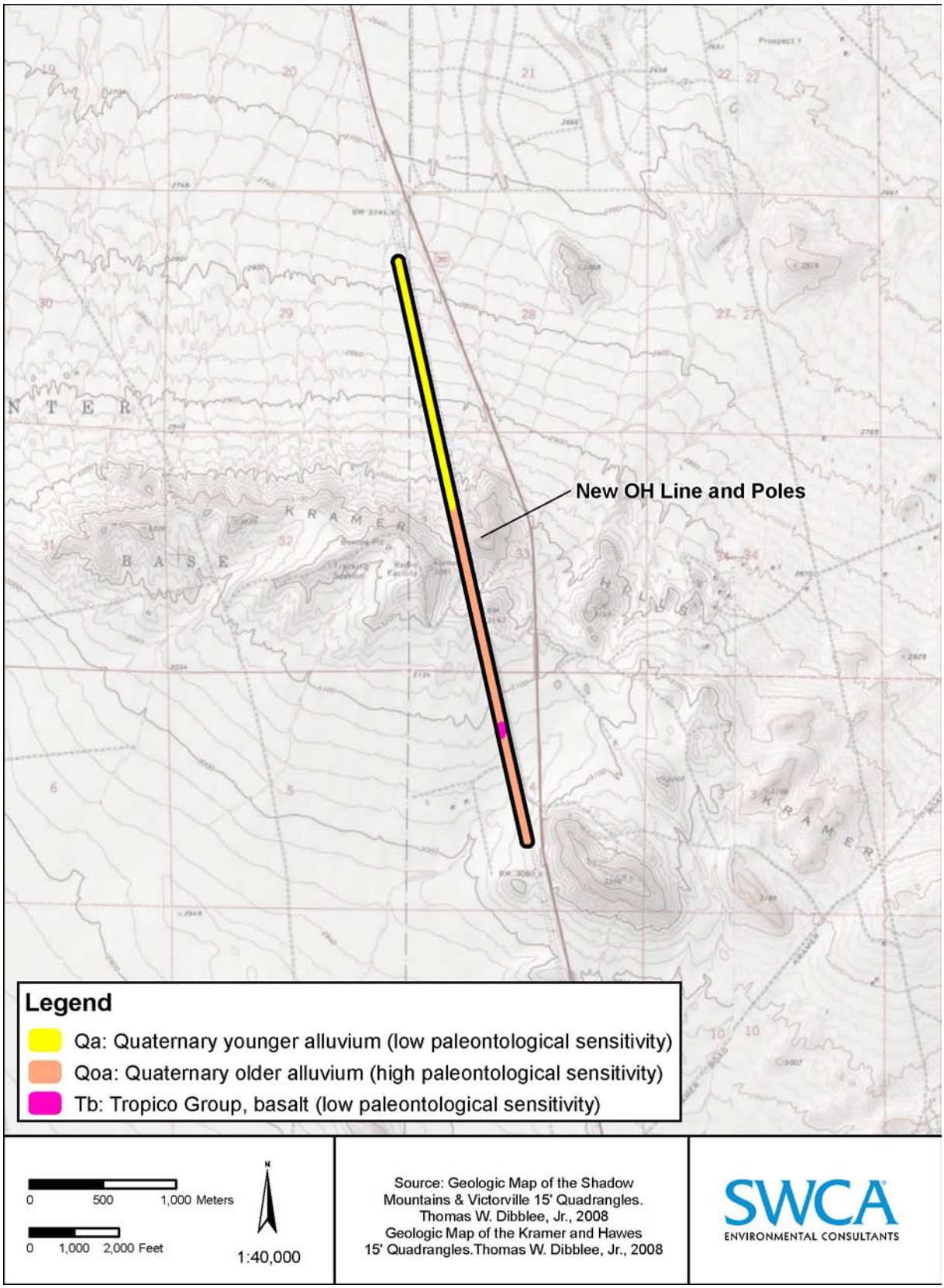

Figure 3. Geologic and Paleontological Sensitivity Map 2 of 3

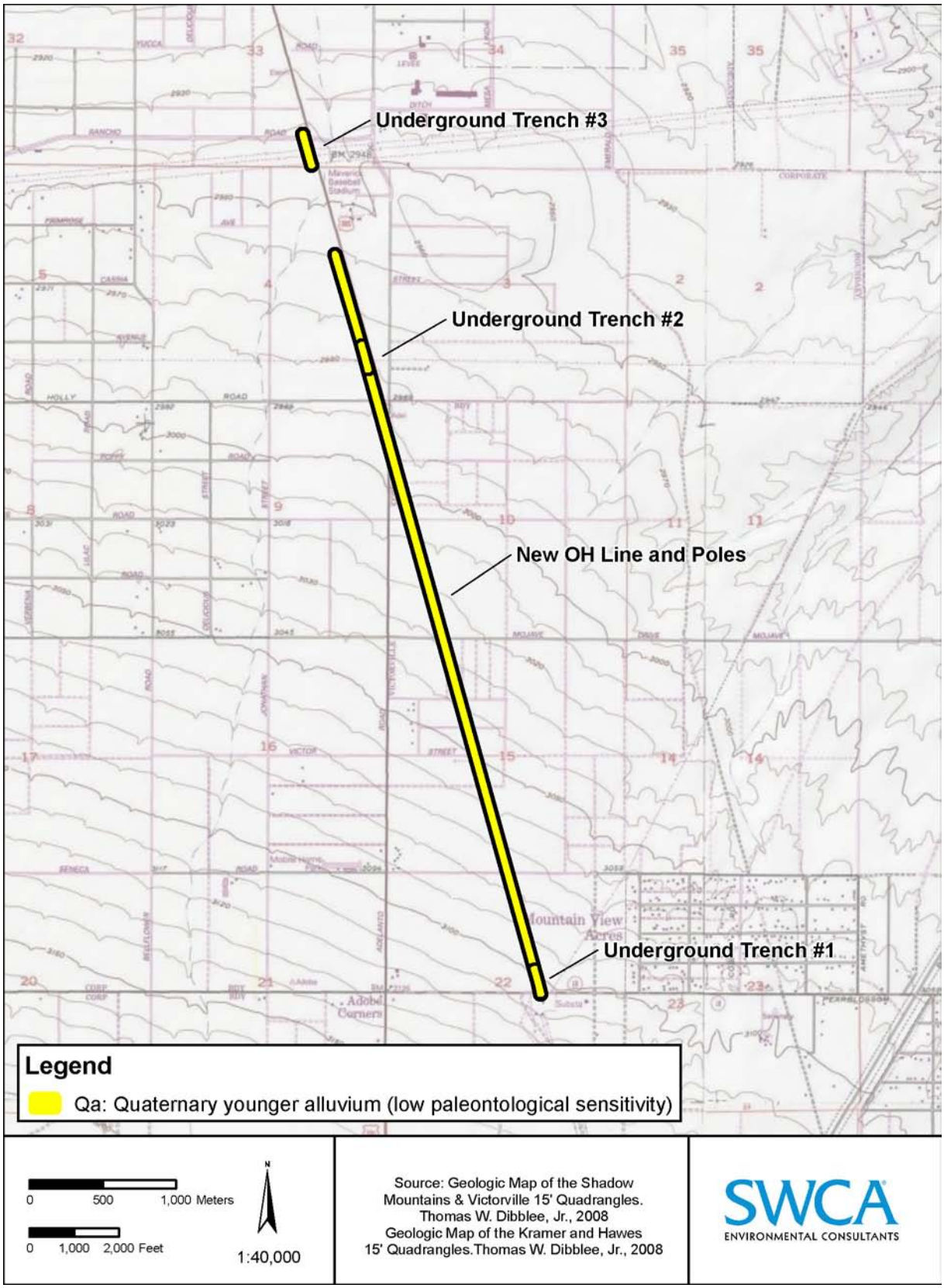

Figure 4. Geologic and Paleontological Sensitivity Map 3 of 3

Quaternary Older Alluvium

Quaternary older alluvial sediments of Pleistocene age (1.8 Ma to 10,000 years BP) occur both at the surface within portions of the project area (See Figure 4) and at depth (Dibblee, 2008a; 2008b). Older alluvium within the study area consists of weakly consolidated, moderately to poorly bedded gravel, sand, and silt light gray to buff in color. These deposits are locally dissected and in part indurated by white caliche (Dibblee, 2008a). Pleistocene-aged alluvium has proven to yield scientifically significant vertebrate fossils both within the region and throughout southern California. Sediments of similar or the same lithologic composition throughout the areas of Barstow and Lenwood to the east as well as Victorville to the south have also been proven to yield significant fossil localities; thus, this unit is determined to have a high potential for paleontological resources (Whistler, 1990; Scott, 2010).

Quaternary Younger Alluvium

The youngest geologic unit found within the project area is Quaternary alluvium of Holocene age to latest Pleistocene in age (Bortugno and Spittler; 1986; Dibblee, 2008a; 2008b). These sediments, making up the majority of the surficial deposits within the project area (See Figures 2 through 4), are composed of unconsolidated and poorly sorted stream, fan, and basin deposits ranging from clay to boulder in size (Bortugno and Spittler, 1986). Although the uppermost sediments of Holocene age may contain the remains of modern organisms, they are too young to contain significant paleontological resources. However, underlying Pleistocene-age sediments are considered to have a high paleontological sensitivity. Therefore, Quaternary younger alluvium within the project area is assigned a paleontological sensitivity ranging from low to high, increasing with age (i.e., depth).

Table 1. Geologic Units within the Project Area

Age	Geologic Unit	Map Abbreviation	Typical Fossil Types	Paleontological Resource Potential (Sensitivity)
Holocene	Younger surficial alluvium	Qa	None	Low to high (increases with depth)
Pleistocene	Older alluvium	Qoa	Vertebrates	High
Miocene	Tropico Group (basalt)	Tb	None	Low

ANALYSIS AND RESULTS

MUSEUM RECORDS SEARCH

A review of the Regional Paleontologic Locality Inventory (RPLI) maintained by the SBCM revealed that 18 vertebrate localities have been previously recorded and collected during a prior mitigation project within the project area. These recorded localities are listed in Table 2 below and shown on Figures 6 and 7 in Confidential Appendix A. These localities yielded specimens of small terrestrial vertebrates such as pocket mouse, jackrabbit, deer mouse, pocket gopher, kangaroo rat, squirrel, cottontail rabbit, and packrat as well as bird, reptile, and a few mostly indeterminate large mammal specimens (Table 2). Eleven of the localities reported a depth of discovery ranging from three to 14 feet below the ground surface; four localities were reportedly surficial localities, and seven localities did not report depth of discovery. All specimens were of extant species, and no time-diagnostic taxa were identified from any of these localities;

therefore, the age of the material cannot be conclusively determined. The SVP (1995) defines paleontological resources as "older than recorded history and/or older than 5,000 years BP." Since all identified taxa from these localities are also present in the region in modern times, their presumed age of greater than 5,000 years BP cannot be verified (Scott, 2010).

Table 2. Previously Recorded Fossil Localities within Project Area and Vicinity

Geological Formation	Museum Locality Number	Taxon	Common Name
Quaternary alluvium	SBCM 1.115.1	Mammalia (large)	Mammal
	SBCM 1.115.2	Mammalia (large)	Mammal
	SBCM 1.115.3	?Artiodactyla	Even-toed ungulate
	SBCM 1.115.4	Mammalia (large)	Mammal
	SBCM 1.115.5	Mammalia (small)	Mammal
	SBCM 1.115.6	*Lepus sp.*	Jackrabbit
	SBCM 1.115.7	*Lepus sp.*	Jackrabbit
		Camelidae	Camel
	SBCM 1.115.11	*Thomomys sp.*	Pocket gopher
	SBCM 1.155.422	Rodentia	Rodent
	SBCM 1.155.423	Mammalia (small)	Mammal
		Vertebrata (large)	Vertebrate
	SBCM 1.155.424	*Perognathus sp.*	Pocket mouse
		Dipodomys sp.	Kangaroo rat
		Peromyscus sp.	Deer mouse
		?*Neotoma sp.*	Packrat
		Mammalia (large)	Mammal
		Mammalia (small)	Mammal
	SBCM 1.155.425 SBCM 1.155.426 SBCM 1.155.427	Mammalia (small)	Mammal
		Dipodomys sp.	Kangaroo rat
		Vertebrata (small)	Vertebrate
		Phrynosoma sp.	Horned lizard
		?Iguanidae	Lizard
		Lacertilia	Lizard
		Lampropeltinae	Snake
		Crotalus sp.	Rattlesnake
		Sylvilagus sp.	Cottontail rabbit
		?Sciuridae	Squirrel
		Thomomys sp.	Pocket gopher
		Perognathus sp.	Pocket mouse
		Dipodomys sp.	Kangaroo rat
		Mammalia (small)	Mammal
	SBCM 1.155.428	Colubridae	Snake
		Lacertilia	Lizard
		Crotalus sp.	Rattlesnake
		Aves	Bird
		Lepus sp.	Jackrabbit

Table 2. Previously Recorded Fossil Localities within Project Area and Vicinity

Geological Formation	Museum Locality Number	Taxon	Common Name
		Sciuridae (small)	Squirrel
		Thomomys sp.	Pocket gopher
		Perognathus sp.	Pocket mouse
		Dipodomys sp.	Kangaroo rat
		?*Peromyscus sp.*	Deer mouse
		Neotoma sp.	Packrat
		Mammalia (small)	Mammal
	SBCM 1.155.474	Vertebrata (small)	Vertebrate
	SBCM 1.155.475	Vertebrata (small)	Vertebrate
	SBCM 1.155.476	Ophidia	Reptile
		Phrynosoma sp.	Horned lizard
		Lepus sp.	Jackrabbit
		Thomomys sp.	Pocket gopher
		Dipodomys sp.	Kangaroo rat
		Mammalia (small)	Mammal

CONCLUSIONS

The destruction of fossils as a result of human-caused ground disturbance has a significant cumulative impact, as it makes biological records of ancient life permanently unavailable for study by scientists. Implementation of proper mitigation measures can, however, reduce the impacts to the paleontological resources to below the level of significance. Various activities related to the installation of new fiber optic cable may require substantial trenching, grading, and excavating for pole foundations, as well as borehole drilling for pole installation. Surficial disturbance may also occur within equipment staging areas. Any ground disturbances in areas considered to be paleontologically sensitive may have an adverse impact on paleontological resources unless proper mitigation measures are implemented.

RECOMMENDED MITIGATION MEASURES

The following are mitigation measures that have been developed to reduce adverse impacts on paleontological resources to a less than significant level. They have been successfully implemented for surface-disturbing projects in California and throughout the western United States.

PRECONSTRUCTION ASSESSMENT, SURVEY, AND EXCAVATION

Survey

Prior to development of the project, a comprehensive pedestrian survey should be conducted by a qualified paleontologist in all areas underlain by geologic units determined to have a high paleontological sensitivity (See Figures 2 though 4). Based on the results of the survey, additional paleontological mitigation (construction monitoring) may be recommended. If the paleontological sensitivity of rock formations, members, individual strata and/or lithology types within the project area is determined to be

more than or less than anticipated as a result of the survey, the paleontological sensitivity of portions of the project area may be adjusted accordingly.

The field survey should consist of an inspection of all potentially fossiliferous rock outcrops and exposures of surficial sediments within the project area. All fossil occurrences, whether significant or not, should be recorded. Recordation should include the types of fossils discovered, geographic coordinates, stratigraphic provenance, photographs for locality relocation, and the lithologies of the fossil-bearing strata. If possible, all significant fossils should be collected during the survey, depending on the number present and their size. This is because it is often difficult to relocate small fossils, and erosion and weathering are adverse impacts on fossils which can be prevented if the fossils are collected and removed from the site. The results of the pre-construction survey will be taken into account during construction monitoring in order to more effectively salvage the resources. For example, a particularly fossiliferous stratum observed during the survey should be more carefully monitored and sampled during construction excavations.

The following are typical recommendations that may result from an initial paleontological field survey:

Sampling

Scientifically significant microfossils (vertebrate, invertebrate, plant or trace fossils) may be identified in rock matrix during a field survey, or, if they are known to occur elsewhere in the same geologic unit or type of deposit in the general area, a determination of their presence or absence may require the use of test sampling of rock matrix for screen-washing in a paleontological laboratory, even if microfossils are not visible in the field. The fossils found, if any, would then be inspected and evaluated in order to determine their significance and make additional mitigation recommendations, if any. Mitigation would include collection of additional matrix for screen-washing.

Salvage

If medium- or large-sized fossils are discovered within a given project site, and they are determined to be scientifically significant, they should be salvaged. Fossil salvages typically involve the systematic excavation of fossil remains as determined on a case-by-case basis, and they should be designed in such a way as to prevent delays to project schedules while properly collecting the fossil and associated data.

Avoidance

If the cost of salvage or other mitigation options are determined to be too high, or permanent damage to the resource caused by surface disturbance is considered to be unavoidable, it may be necessary to “avoid” or “reroute” the locality in order to prevent adverse impacts on the resource. Avoidance should also be considered if a known fossil locality contains critical scientific information and should be left undisturbed for subsequent scientific evaluation.

Construction Monitoring

Paleontological monitoring work should be performed by a qualified paleontological monitor under the supervision of a qualified paleontologist. Paleontological monitoring would include inspection of exposed rock units and microscopic examination of matrix to determine if fossils are present. This work would take place during surface-disturbing activities such as excavations for the construction of roads, buildings, and other associated facilities or infrastructure. Depending upon the paleontological sensitivity of the

area/geologic units, and the types and significance of potential fossils that could be present in sub-surface sedimentary deposits, monitoring would be scheduled to take place continuously or to consist of spot-checks of construction excavations. Paleontological monitors would follow earth-moving equipment and examine excavated sediments and excavation sidewalls for evidence of significant paleontological resources. The monitors would have authority to temporarily divert grading away from exposed fossils in order to professionally and efficiently recover the fossil specimens and collect associated data. All efforts to avoid delays to project schedules would be made.

If any subsurface bones or other potential fossils were found by construction personnel during construction when a paleontological monitor is not present, work in the immediate area would cease immediately, and the qualified paleontologist would be contacted to evaluate the significance of the find. Once salvage or other mitigation measures (including sampling) was complete, the qualified paleontologist would notify the construction supervisor that paleontological clearance had been granted.

Paleontological monitors should be equipped with the necessary tools for the rapid removal of fossils and retrieval of associated data in order to prevent construction delays. This equipment would include handheld global positioning system (GPS) receivers, digital cameras, cell phones, laptop computers, as well as toolkits containing specimen containers and matrix sampling bags, field labels, field tools (awls, hammers, chisels, shovels, etc.), and plaster kits. The collected fossils would be transported to a paleontological laboratory for processing.

Fossil Preparation and Curation

In the laboratory, all fossils would be prepared, identified, inventoried, and a determination of significance made. Specimen preparation and stabilization methods would be recorded for use by the paleontological repository. All fossil specimens would then be transferred to a public museum or other approved paleontological repository accompanied by a copy of the final paleontological monitoring report and all data in hard and electronic copy. The cost of curation, maintenance, and permanent storage of fossil specimens is generally assessed by the repository.

Reporting

The final paleontological monitoring report shall be prepared to include, but not be limited to, a discussion of the results of the mitigation-monitoring plan, an evaluation and analysis of the fossils collected (including an assessment of their significance, age, and geologic context), an itemized inventory of fossils collected, a confidential appendix of locality and specimen data with locality maps and photographs, an appendix of curation agreements and other appropriate communications, and a copy of the project-specific paleontological monitoring and mitigation plan.

REFERENCES

Bortugno, E.J., and Spittler, T.E., 1986, Geologic Map of the San Bernardino Quadrangle, California: California Division of Mines and Geology Regional Map Series, scale: 1:250,000.

County of San Bernardino, 2007, County of San Bernardino General Plan: Adopted March 13, 2007.

DeBusk, J., and C. Corsetti, 2009. Paleontological Resources Assessment for the Mojave Solar Project, San Bernardino County, California. Prepared for Abengoa Solar, Incorporated. On file at SWCA Environmental Consultants Pasadena Office.

Dibblee, T.W., Jr., 1958, Tertiary Stratigraphic Units of Western Mojave Desert, California. Bulletin of the American Association of Petroleum Geologists Vol. 42, No. 1. PP. 135-144.

Dibblee, T.W., Jr., 1967, Areal geology of the western Mojave Desert, California: U.S. Geological Survey Professional Paper 522.

Dibblee, T.W., Jr., 2008a, Geologic Map of the Kramer and Hawes 15 Minute Quadrangles, Kern, San Bernardino, and Los Angeles Counties, California: Dibblee Geological Foundation Map DF-385, scale 1:62,500

Dibblee, T.W., Jr., 2008b, Geologic Map of the Shadow Mountains and Victorville 15 Minute Quadrangles, San Bernardino and Los Angeles Counties, California: Dibblee Geological Foundation Map DF-387, Scale: 1:62,500.

Murphey, P.C., and Daitch, D., 2007, Paleontological overview of oil shale and tar sands areas in Colorado, Utah and Wyoming: U.S. Department of Energy, Argonne National Laboratory Report Prepared for the U.S. Department of Interior Bureau of Land Management, 468 p. and 6 maps, scale 1:500,000.

Norris, R.M., and R.W. Webb, 1976, Geology of California, second edition: John Wiley & Sons, New York, p. 277–300.

Society of Vertebrate Paleontology (SVP), 1995, Assessment and Mitigation of Adverse Impacts to Nonrenewable Paleontologic Resources: Standard Guidelines: Society of Vertebrate Paleontology News Bulletin. v. 163, p. 22–27.

Norris, R.M., and R.W. Webb, 1976, *Geology of California*. 2d ed. New York: John Wiley & Sons, p. 277–300.

Scott, E., 2010, Unpublished paleontological specimen and locality data: San Bernardino County Museum, Redlands, California, 6p.

Whistler, D.P., 1990, A Late Pleistocene (Rancholabrean) fossil assemblage from the northwestern Mojave Desert, California: San Bernardino County Museum Association Quarterly, v. 37, p. 1–17.

Confidential APPENDIX A: Paleontological Localities

On file with Department of Energy

APPENDIX M

BIOLOGICAL RESOURCES

APPENDIX M

DESCRIPTION OF VEGETATION COMMUNITIES

AMSP, Lockhart Substation and Interconnection Study Area

Desert Saltbush Scrub. Desert saltbush scrub is dominated by four-wing saltbush (*Atriplex canescens*), spinescale (*Atriplex spinifera*), and allscale (*Atriplex polycarpa*) shrubs up to 6 feet in height. Other shrubs found growing within desert saltbush scrub included winter fat (*Krasheninnikovia lanata*), horsebrush (*Tetradymia* sp.), and creosote bush (*Larrea tridentata*).

Disturbed – Desert Saltbush Scrub. Disturbed desert saltbush scrub occurs mainly at the edges or adjacent to abandoned agricultural fields. It was mapped in areas that have been altered by previous human activity including grading, repeated clearing, and vehicular damage, which over time has degraded "naturally" occurring desert saltbush scrub resulting in a lower shrub density and an increased abundance of nonnative plant species. Disturbed desert saltbush scrub is mainly dominated by allscale and spinescale with a dominant understory of nonnative herbaceous plants.

Mojave Creosote Bush Scrub. Mojave creosote bush scrub occurs near the southern portion of the AMSP/ Lockhart Substation site. Mojave creosote bush scrub consists of widely spaced shrubs from 2 to 6 feet in height and dominated by creosote bush and white bursage (*Ambrosia dumosa*). While dominated by shrubs, this vegetation community also was found to have a relatively diverse herbaceous layer that included such native annual species as dwarf cottonrose (*Filago depressa*), Fremont's phacelia (*Phacelia fremontii*), and desert dandelion (*Malacothrix glabrata*).

Desert Sink Scrub. Desert sink scrub is characterized as dominated by chenopod-type plants that grow on poorly drained soils with high alkalinity and sometimes with a layer of salt crust at the soil surface. Dominant plants for this vegetation community within the Project study area include bush seepweed, alkali heath (*Frankenia salina*), red molly (*Kochia californica*), and five-hook bassia. This vegetation community occurred between, or intermixed with, alkali marsh and desert saltbush scrub.

Tamarisk Scrub. This community is dominated by tamarisk (*Tamarix ramosissima*), a nonnative shrub to small tree from Central Asia. The plant was originally introduced for erosion control and windbreak purposes. Tamarisk is deep rooted and can be found along streams and lake shores throughout California. Tamarisk is highly invasive and is associated with dramatic changes in groundwater availability. This species is also capable

of forming monotypic stands that outcompete native species for water. Tamarisk scrub is restricted to a few areas within the Project study area that are mainly situated near the western margin of Harper Dry Lake. Tamarisk was also detected along roadsides adjacent to abandoned agricultural fields, and as windbreaks surrounding some of the residential developments.

Mojave Desert Wash Scrub. Mojave Desert wash scrub consists mostly of sandy, braided, shallow washes dominated by allscale and creosote bush. In areas where a more defined channel was present, shrub species included Anderson's boxthorn (*Lycium andersonii*), peachthorn (*Lycium cooperi*), cheesebush (*Ambrosia* [*Hymenoclea*] *salsola*), and white bursage. Native annuals included whitestem blazingstar (*Mentzelia albicaulis*), Mojave pincushion (*Chaenactis xantiana*), easterbonnets (*Eriophyllum wallacei*), whitemargin sandmat (*Chamaesyce albomarginata*), and Mojave suncups (*Cammisonia campestris*).

Dry Lake. Dry lake was determined to be bare saline soils devoid of vegetation and occurs in the northeastern portion of the AMSP/ Lockhart Substation site; however, the Project has been designed to avoid impacts to the dry lakebed.

Fallow Agricultural - Disturbed Desert Saltbush Scrub. The fallow agricultural - disturbed desert saltbush scrub regrowth community occurs in areas previously used for agricultural purposes but that have now become occupied with several *Atriplex* species. The dominant species is allscale, a colonizer that readily occupies abandoned agricultural lands in the Mojave Desert. The degree of regrowth appears to correspond to variation in soil texture and moisture retention. Other plants that were detected in this vegetation community included shadscale (*Atriplex confertiflora*), Russian thistle (*Salsola tragus*), annual bursage (*Ambrosia acanthicarpa*), and salt heliotrope (*Heliotropium curassavicum*).

Fallow Agricultural-Ruderal. This land cover type represents the largest category that occurs within the AMSP/Lockhart Substation site. The fallow agricultural-ruderal vegetation community occurs on land formerly used for agricultural purposes and is dominated by ruderal nonnative plants. The dominant plant species are Russian thistle, Saharan mustard (*Brassica tournefortii*), and split grass (*Schismus arabicus*).

Active Agricultural. The active agricultural area is currently farmed with alfalfa (*Medicago sativa*) and is being irrigated with a center pivot system.

Disturbed. Disturbed habitat is land that has been altered by previous human activity including grading, repeated clearing, and vehicular damage. Disturbed land is typically characterized by more than 50 percent bare ground and an absence of remnant native vegetation. Disturbed habitat is mostly unvegetated; when vegetation is present, it mostly consists of Saharan mustard.

Developed. The areas mapped as developed include paved roads, dirt roads, and residential areas.

Evaporation Ponds. Two evaporation ponds are located in the northwestern portion of the Harper Dry Lake Solar Electric Generating Stations (SEGS), northwest and outside of the boundaries of the Project study area and within the one-mile buffer zone. The ponds are mentioned here for comparison to the proposed new ponds.

Telecommunication System Study Area

White Bursage Scrub. White bursage scrub consists of white bursage with creosote bush in a lower proportion. The shrub canopy is two tiered with a few creosote shrubs in the upper tier and white bursage in the lower tier. This white bursage scrub vegetation community was described as Mojave creosote bush scrub-*Ambrosia dumosa* dominant and Mojave Creosote Bush –*Ambrosia dumosa* – *Atriplex* Scrub in the preliminary analysis (AECOM 2010a).

Joshua Tree Woodlands. Joshua tree woodlands consist of Joshua trees (*Yucca brevifolia*) interspersed with *Atriplex* species, white bursage, and creosote bush.

Table M-1. Special Status Plant Species and Probability of Occurrence in the Project study area

Common Name *Scientific Name*	Sensitivity Status[1]	Habitat Requirements (CNPS 2008)	Blooming Period	Probability of Occurrence
Chaparral sand-verbena *Abronia villosa* var. *aurita*	CNPS List 1B.1	Known to occur in chaparral, coastal scrub, and desert dunes or sandy areas.	Annual herb Blooms January through September	Low potential of occurrence within Project study area. Chaparral sand-verbena is known to occur over 5 miles from the Project study area near the town of Hinkley, California (CDFG 2008). No populations were observed in the Project study area during 2008 botanical surveys.
Desert cymopterus *Cymopterus deserticola*	CNPS List 1B.2	Found in Joshua tree woodland and Mojave desert scrub.	Perennial herb Blooms March through May	Detected in the vicinity of the Project study area. One individual was detected in a small wash, south of Santa Fe Avenue, and approximately 4,350 feet southwest of the southernmost section of the AMSP site.
Recurved larkspur *Delphnium recurvatum*	CNPS List 1B.2	Known to occur in chenopod scrub, cismontane woodland, and valley/foothill grassland.	Perennial herb Blooms March through June	Low potential of occurrence within Project study area. Recurved larkspur is not listed as occurring near the Project study area using a nine-quad search centered on the Lockhart quad (CDFG 2008). The closest occurrence of recurved larkspur (recorded in 1952) is approximately 20 miles west of the Project study area, near the northeast corner of Edwards Air Force Base and near State Route 58. No populations were observed in the Project study area during 2008 botanical surveys.
Barstow woolly sunflower *Eriophyllum mohavense*	CNPS List 1B.2	Creosote bush scrub, desert playas, and desert saltbush scrub.	Annual herb Blooms March through April	Moderate to high potential of occurrence within Project study area. Barstow woolly sunflower is known from a population just north of Harper Dry Lake (CDFG 2008). No populations were observed in the Project study area during 2008 botanical surveys.

Common Name *Scientific Name*	Sensitivity Status[1]	Habitat Requirements (CNPS 2008)	Blooming Period	Probability of Occurrence
Sagebrush loeflingia *Loeflingia squarrosa* var. *artemisiarum*	CNPS List 2.2	Desert dunes, great basin scrub, and sonorant desert scrub.	Annual herb Blooms April through May	Low potential of occurrence within Project study area. Sagebrush loeflingia is not listed as occurring near the Project study area using a nine-quad search centered on the Lockhart quad (CDFG 2008). No populations were observed in the Project study area during 2008 botanical surveys.
Mojave monkeyflower *Mimulus mohavensis*	CNPS List 1B.2	Joshua tree woodland and Mojave desert scrub.	Annual herb Blooms April through June	Low potential of occurrence within Project study area. Mojave monkeyflower is not listed as occurring near the Project study area using a nine-quad search centered on the Lockhart quad (CDFG 2008). No populations were observed in the Project study area during 2008 botanical surveys.
Utah glasswort *Salicornia* [*Sarcocornia*] *utahensis*	CNPS List 2.2	Known to occur along alkali playas and marshes.	Perennial succulent Blooms August through September	Moderate potential of occurrence within the Project study area. According to information in the CNDDB, this species was previously detected near the Rancho Percebu Duck Club Pond, west of Harper Dry Lake (CDFG 2008). A pickleweed species was found growing in the proximity of alkali marsh outside of the Project study area, but based on rigorous field inspection during the appropriate blooming period, it was determined that the species was annual pickleweed.

[1] Sensitivity Status Key.

California Native Plant Society (CNPS).
List 1B.1- Plants rare, threatened, or endangered in California and elsewhere; seriously endangered in California.
List 1B.2 - Plants rare, threatened, or endangered in California and elsewhere; fairly endangered in California.
List 2.2 - Plants rare, threatened, or endangered in California, but more common elsewhere; fairly endangered in California.

Table M-2. Special Status Wildlife Species and Probability of Occurrence in the Project study area

Common Name *Scientific Name*	Sensitivity Status[1]	Habitat Requirements	Probability of Occurrence
Reptiles			
Testudines (Turtles)			
Desert tortoise (DT) *Gopherus agassizii*	ESA: Threatened CESA: Threatened	Various desert scrubs and desert washes up to about 5,000 feet, but not including large, unvegetated playas.	DT individuals were not detected during 2009 surveys; however, in 2008, 35 DTs were encountered in the within or near the Project study area, with six observed on Zone of Influence (ZOI) transects for a total of 41 DT observations. No DTs were documented within the AMSP site during 2007 or 2008 surveys. One female DT was observed twice near and within one of the ranches located in the AMSP site during reconnaissance surveys in 2006 (EREMICO 2006); however, this DT may have been preyed upon by dogs residing at the home as it was not seen during 2007 or 2008 surveys.
Birds			
Pelecaniformes (Tropicbirds, Pelicans, and Relatives)			
American white pelican *Pelecanus erythrorhynchos*	CDFG: Species of Special Concern	Breeds in northeastern California, winters throughout central and southern California. Rivers, lakes, estuaries, bays, marshes, nests usually in brackish or freshwater lake islands.	Detected. Remains of this species were found in August 2007, north of the AMSP site within the one-mile buffer. The carcass was scavenged.
Falconiformes (Vultures, Hawks, and Falcons)			
Swainson's hawk *Buteo swainsoni*	CESA: Threatened	Migrant that breeds in North America and winters in South America. Forages in open grasslands, agricultural areas, sparse shrublands, and small open woodlands. Nests in scattered trees within grasslands, shrublands, or agricultural landscapes.	Detected. One individual of this species was observed perched within the AMSP site near the southern boundary in June 2007. Two other individuals were observed soaring above the 1-mile buffer in August 2007.
Northern harrier *Circus cyaneus*	CDFG: Species of Special Concern	Occurs in grasslands and agricultural fields during migration and in winter.	Detected. Two individuals of this species were observed within the 1-mile buffer, one in May 2007, and one in August 2007. This species was also detected during 2006 reconnaissance surveys (EREMICO 2006; EDAW 2006).

Common Name *Scientific Name*	Sensitivity Status[1]	Habitat Requirements	Probability of Occurrence
American peregrine falcon *Falco peregrinus anatum*	CESA: Endangered CDFG: Fully Protected	Open habitats from tundra, moorlands, steppe, and seacoasts to mountains, and open forested regions, especially where there are suitable nesting cliffs.	Detected. One individual of this species was observed within the AMSP site perched north of the active agricultural field in August 2007. This individual was likely a transient or at most may use the area in the vicinity of the Project study area as a peripheral and occasional part of its home range.
Charadriiformes (Shorebirds, Gulls, and Relatives)			
Western snowy plover *Charadrius alexandrinus nivosus* *Federal listing applies only to the Pacific coastal population.	CDFG: Species of Special Concern (nesting)	Sandy beaches, dunes, and salt flats. Outside the breeding season they are more widespread.	Low potential for this species to occur. This bird was reported as occurring on the southwestern edge of Harper Dry Lake in 1978, with an estimated count of 94 birds. Most individuals appeared to be displaying nesting behavior; one nest found with three eggs. Since that time, the marsh area has become degraded due to loss of artificial water inputs from agricultural operations; therefore, habitat for this species is not present, and it is not expected that this species would utilize the Project study area as habitat.
Strigiformes (Owls)			
Short-eared owl *Asio flammeus*	CDFG: Species of Special Concern	Nests in well-vegetated open areas including grasslands, grain fields, riparian edges, and marshes. Many populations of this species are migratory.	High potential for this species to occur. This species was detected within the Project study area during a reconnaissance survey conducted in 2006 (EREMICO 2006). Suitable nesting habitat for this species occurs in the active agricultural field.
Western burrowing owl (WBO) *Athene cunicularia*	CDFG: Species of Special Concern	Found mainly in grassland and open scrub from the seashore to foothills. Strongly associated with ground squirrel burrows.	Detected. In 2008, one WBO was observed within the AMSP site. Also, one owl pellet was observed in the northwestern corner of the AMSP site in 2008. In 2007, a pair of WBOs was observed; however, they were not observed during 2008 surveys. An unchained domestic dog was observed within this area, so the loss of the pair may have been due to dog predation, or the WBO may have moved. Four WBOs were detected during a reconnaissance survey conducted within the AMSP site in 2006 (EREMICO 2006).
Passeriformes (Perching Birds)			

Common Name *Scientific Name*	Sensitivity Status[1]	Habitat Requirements	Probability of Occurrence
Yellow warbler *Dendroica petechia*	CDFG: Species of Special Concern	Breeds in mature riparian woodlands that consist of cottonwood, willow, alder, and ash trees.	Detected. This species was observed within the AMSP site during May 2007 surveys. Suitable breeding habitat for this species does not occur within the AMSP site or the 1-mile buffer; therefore, this individual was likely a migrant and was not mapped.
Willow flycatcher *Empidonax traillii*	ESA: Endangered (only *E. t. extimus* is federally listed) CESA: Endangered	Riparian woodlands with current or evidence of recent water flow and scouring. Riparian corridors must be at least 33 feet wide, closed canopy, relatively dense understory, and open mid-story.	Detected. One individual of this species was observed using a small stand of ornamental trees within the AMSP site near the southern boundary in June 2007. Suitable breeding habitat for this species does not occur within the Project study area or the 1-mile buffer; therefore, this individual was likely a migrant.
Loggerhead shrike *Lanius ludovicianus*	CDFG: Species of Special Concern	Occurs in semiopen country with utility posts, wires, and trees to perch on.	Detected. Suitable habitat for loggerhead shrike occurs throughout the AMSP site. Loggerhead shrikes were observed in the AMSP site during 2007 and 2009. This species was also detected during 2006 reconnaissance surveys (EREMICO 2006; EDAW 2006).
Mammals			
Mohave ground squirrel (MGS) *Spermophilus mohavensis*	CESA: Threatened	Mojave desert scrub, alkali scrub, and Joshua tree woodland between 1,800 and 5,000 feet. Sandy to gravelly soils.	Detected. In 2007, one MGS was trapped (one adult female; age approx. 1 year) within the AMSP site at the edge of an active alfalfa field in the northeast quarter of Section 32 during a reconnaissance survey (EREMICO 2006).
American badger *Taxidea taxus*	CDFG: Species of Special Concern	Coastal sage scrub, mixed chaparral, grassland, oak woodland, chamise chaparral, mixed conifer, pinyon-juniper, desert scrub, desert wash, montane meadow, open areas, and sandy soils.	High potential for this species to occur. A badger den was detected within the AMSP site during a 2006 reconnaissance survey (EREMICO 2006).

[1] Sensitivity Status Key.

Federal Endangered Species Act (ESA).

State California Endangered Species Act (CESA).

California Department of Fish and Game (CDFG).

Special Status Species Survey Results, AMSP/Lockhart Substation Study Area

Desert Tortoise. Results of DT reconnaissance and focused protocol surveys for the AMSP indicated that very few DTs utilized the site over a 4-year period. In 2006, the only DT observed within the Project study area was detected near an existing ranch property and was thought to be a pet of the ranch owner (pers. comm., William Clark, 2009). No other DTs were documented within the site during subsequent focused protocol-level surveys.

Another DT observation occurred in 2006, approximately 700 feet south outside of the Project study area boundary (south of the Beta site and coincidentally, near an active alfalfa field) (EDAW 2006). In addition to the two DT observations in 2006, a DT was also observed approximately 500 feet southeast of the Project study area boundary in 2008. These three DTs were the only individuals observed in proximity to the Project study area.

The remainder of DTs observed during Project surveys were observed to the west and east and relatively distant from the Project study area. For example, in 2008, the nearest DT observation occurred over 2,250 feet from the Project study area boundary. West of the Project study area boundary, the nearest observation of DT in 2008 was over 2,300 feet away.

In 2008, DT surveys resulted in observation of 35 DTs, plus six within the Zone of Influence (ZOI) transects, totaling 41 DT observations in 2008. Of the observed DTs, 33 were adults, six were subadults, and 2 were juveniles. DT sign observed within the Project study area includes five DT bone groups. In 2007, only one DT was documented during surveys, within the 1-mile CEC buffer south of the Project study area.

Other DT sign detected within the Project study area (burrows, scat, etc.) consisted mainly of DT carcasses. Specific DT sign locations and descriptions are provided in appendices of the AMSP AFC.

*Swainson's Hawk***.** Suitable nesting and foraging habitat for SWHA occurs within the site in the form of large ornamental trees at occupied and abandoned residences and open active and fallow agricultural fields. A single SWHA was observed perched on a small shrub within the site on June 20, 2007, during a raptor survey, and a pair of SWHAs was observed soaring over the site on August 13, 2007, during a WBO survey. At least two large, empty stick nests were also found within the 1-mile buffer; however, no birds were seen using these nests, and the bird species using these nests could not be determined.

*American Peregrine Falcon***.** One American peregrine falcon, likely a transient, was detected within the Project study area perched north of the active agricultural field on August 14, 2007, during WBO surveys.

*Willow Flycatcher***.** A willow flycatcher was observed within the Project study area on June 12, 2007, during the spring migratory period for a northern subspecies of willow flycatcher (*E. traillii brewsteri*) that is known to migrate through this area. No suitable willow flycatcher breeding habitat occurs within the Project study area; therefore, this individual was likely a transient. Based on this lack of suitable

habitat, the willow flycatcher is not expected to remain or breed within the site or the Project study area.

*Mohave Ground Squirrel***.** In consultation with resource agencies, it was determined that surveys for MGS were not required in 2009. No MGS were detected during habitat assessment activities in 2008. During 2007 surveys, one MGS was captured within the Project study area at the edge of an active alfalfa field in the northeast quarter of Section 32 (EREMICO 2007). No MGS were captured during trapping efforts in 2006 (EREMICO 2006). The AMSP/Lockhart Substation area is surrounded by the MGS Conservation Area as designated in the West Mojave Plan (BLM 2005). However, all of the area lies outside of the MGS Conservation Area.

Species of Special Concern Detected within AMSP/Lockhart Substation site or within one-mile

*American White Pelican***.** During 2007 surveys, remains of this species were found north of the Project study area and within the 1-mile buffer. No suitable American white pelican breeding habitat occurs within the Project study area; therefore, this individual was likely a transient. Based on this lack of suitable habitat, the American white pelican is not expected to remain or breed within the site or the Project study area.

*Northern Harrier***.** Harriers were detected twice in the 1-mile buffer north of the AMSP site: May 30, 2007, during DT surveys and August 22, 2007, during WBO surveys. This species was also detected within the site during 2006 reconnaissance surveys (EREMICO 2006).

*Western Snowy Plover***.** The western snowy plover was reported to occur on the southwestern edge of Harper Dry Lake in 1978, with an estimated count of 94 birds (CDFG 2008). Most individuals seemed to be displaying nesting behavior; one nest was found with three eggs. Since that time, the marsh area has degraded and lost all structure and function; therefore, habitat for this species is not present, and it is not expected that this species would utilize the site or the Project study area. The interior population of western snowy plover is not considered a federally listed (threatened) species, although both the interior and coastal populations are CDFG SSC (CDFG 2009; USFWS 2009).

*Western Burrowing Owl***.** During WBO surveys in 2008, a single WBO was observed within the AMSP/Lockhart Substation site. A pair of WBO that had been observed in the site during 2007 surveys was not observed in the 2008 surveys. A domestic dog was observed within this area, so the loss of the pair may have been due to dog predation, or the owls may have simply moved. During 2006 reconnaissance surveys, four WBO individuals were detected in the eastern section of the site.

*Short-eared Owl***.** One short-eared owl was observed within the site during reconnaissance surveys in 2006; however, because this species tends to be active both day and night and no subsequent observations were recorded, it is likely that this individual was a transient and did not breed within the site.

*Loggerhead Shrike***.** Suitable breeding and nonbreeding habitat for loggerhead shrike occurs throughout the Project study area. Loggerhead shrikes were observed during biological surveys of the vicinity of the

AMSP/Lockhart Substation site. Loggerhead shrikes were observed in the site during 2007 and 2009. This species was also detected during 2006 reconnaissance surveys (EREMICO 2006; EDAW 2006).

Yellow Warbler. This species was observed within the Project study area during the May 2007 surveys. Suitable breeding habitat for this species does not occur within the site or the 1-mile buffer; therefore, this individual was likely a migrant and was not mapped.

American Badger. The American badger was not detected during 2007/2008 surveys; however, one badger den was detected within the AMSP/Lockhart Substation site during reconnaissance surveys in 2006 (EREMICO 2006). The den was partially filled in and no recent badger sign was evident, indicating that the den likely had not been used recently.

Raptor Survey Results, AMSP/Lockhart Substation Site and Study Area

Cooper's Hawk. A Cooper's hawk was observed flying over the Project study area during DT surveys in 2008. It would not be expected to nest within the Project study area due to lack of suitable habitat. The species typically nests in relatively large trees, and in areas of dense patches of trees. Within the Project study area, there is a relatively sparse occurrence of trees within and adjacent to the Project; therefore, there is a low probability that the Cooper's hawk would nest on site.

Merlin. The merlin was documented within the fallow agricultural fields in the Project study area during both DT and WBO surveys in 2008.

Prairie Falcon. Prairie falcons were observed twice within the Project study area; a pair was observed soaring just west of the Project study area during DT surveys, and a single individual was observed hunting in the active agricultural area on two consecutive days (August 22 and 23, 2007) during WBO surveys. This species was also detected during reconnaissance surveys of the Project study area in 2006. Suitable prairie falcon nesting habitat occurs on the desert bluffs approximately 8 miles northeast of the Project study area but not within the Project study area.

APPENDIX M-1

DESERT TORTOISE CLEARANCE AND RELOCATION/TRANSLOCATION PLAN

MOJAVE SOLAR PROJECT

DESERT TORTOISE CLEARANCE AND RELOCATION/TRANSLOCATION PLAN

Submitted to:

MOJAVE SOLAR, LLC
13911 Park Avenue, Suite 206
Victorville, California 92392

Prepared by:

Alice E. Karl, Ph.D.
P.O. Box 74006
Davis, California 95617

January 2011

TABLE OF CONTENTS

1.0 Background 1

1.1 Project Description and Setting 1

1.2 Desert Tortoise Occurrence in the Project Area and Vicinity 2

2.0 Purpose and Structure of the Plan 3

3.0 Procedures Applicable to All Relocations and Translocations 4

3.1 Data Gathered on Relocated and Translocated Tortoises 4

3.2 Transmitters 5

3.3 Tortoise Transportation and Holding 5

3.4 Handling Temperatures 6

3.5 Authorized Handlers 6

4.0 Clearance and Relocation/Translocation During Specific Project Phases 7

4.1 Project Area Perimeter Fencing and Temporary Fencing 7

4.1.1 Project Area Fencing Schedule 8

4.1.2 Surveys and Monitoring during Fence Construction 8

4.1.3 Tortoise Relocation Methods during Fence Construction 9

4.1.4 Health Considerations 14

4.1.5 Post-Release Tortoise Monitoring 14

4.1.6 Nest Relocation 18

4.1.7 Monitoring Fence Integrity 18

4.2 Plant Sites and Associated Facilities inside the Project Area 18

4.2.1 Clearance Surveys 18

4.2.2 Translocation Release Areas and Designated Translocation Sites 20

4.2.3 Translocation Methods 22

4.2.4 Health Considerations 24

4.2.5 Post-Release Tortoise Monitoring 26

4.2.6 Nest Relocation 26

4.3 SCE Fiberoptics Construction, Construction Outside the Project Area, and Harper Lake Road 26

4.4 Operations Phase 27

4.5 Decommissioning and Reclamation Phase 28
4.6 Injured or Dead Tortoises 28
5.0 Reporting 28
6.0 Funding 29
7.0 Literature Cited 29

Appendix 1. Sample Desert Tortoise Data Form 33

List of Figures

Figure 1. Location of the Mojave Solar Project 36
Figure 2. Mojave Solar Project Vegetation Cover and Special Management Areas 37
Figure 3. Desert Tortoise Sign Observed during Surveys 38
Figure 4. Relocation Sites and Proposed Surveys for Diseased Resident Tortoises 39
Figure 5. Translocation Sites and Proposed Surveys for Diseased Resident Tortoises 40

List of Tables

Table 1. Alternatives for Relocating Tortoises Found during Periods of Ambient Temperatures Outside the USFWS (2009, 2010b) Guidelines 11

MOJAVE SOLAR PROJECT

DESERT TORTOISE CLEARANCE AND RELOCATION/TRANSLOCATION PLAN

1.0 BACKGROUND

1.1 Project Description and Setting

Mojave Solar, LLC, (Mojave Solar) proposes to develop the 1,765-acre Mojave Solar Project (MSP or Project), approximately nine miles northwest of the town of Hinkley, California, in an unincorporated area of San Bernardino County (Figure 1). The Project is a 250 MW, parabolic solar thermal trough facility, the details of which can be found in the Biological Assessment (BA; U.S. Department of Energy [DOE] 2010). In summary, the Project includes the following:

- Within the Project Area (i.e., Project footprint) there will be two, independent Plant Sites (Alpha and Beta), each of which includes a solar electric generating facility with a nominal net electrical output of 125 megawatts (MW). Each Plant Site contains a solar array, power block and power generating equipment, support facilities and two evaporation ponds with a nominal surface area of 5 acres each (10 acres total, or 20 acres for the entire Project).
- The Project will connect to the Southern California Edison (SCE)-owned Kramer-Coolwater 220 kilovolt (kV) transmission line located adjacent to the southern border of the Project. SCE's new Lockhart Substaton and most interconnection facilities will be entirely located within the boundaries of the southern portion of the Project Area. Part of the proposed "transmission line loop", will be located outside the Project boundary in the existing SCE right-of-way (ROW). Also outside the Project Area is SCE's proposed telecommunication system between Lockhart Substation and other regional substations. This will require that new fiber-optic cables be strung on existing and/or new transmission poles in SCE ROWs along one or more of three potential routes.
- Natural gas for the Project's ancillary purposes will be supplied by a pipeline owned by Southern California Gas (SoCal Gas) that runs to the Project boundary. No off-site pipeline facilities are proposed as a part of this Project.
- Water for all industrial and construction uses will be supplied from on-site groundwater wells. Drinking water will be produced using an onsite water treatment system to meet potable standards.
- A sanitary septic system and on-site leach field will be used to dispose of sanitary wastewater.

The Project is sited on formerly and currently farmed lands. Abandoned agricultural operations include crops, especially alfalfa, irrigated by center-pivot irrigation, as well as some livestock operations. Half of one center-pivot field is still farmed for alfalfa and wheat. Existing adjacent anthropogenic development includes the Solar Electric Generating Systems (SEGS) VIII and IX facility to the north-northwest and a few remaining residences. Other aboveground development includes SCE's Kramer-Coolwater 230-kV transmission line, which travels east-west, south of the Project, and the paved Harper Lake Road, which runs through the Project Area.

Relict native plant communities on the site exist in the corners of the center-pivot fields and consist of disturbed saltbush scrub (*Atriplex polycarpa* and *A. confertifolia*). There is also some saltbush scrub regrowth in the former dairy operation and formerly farmed fields west of Harper Lake Road, and northeast of Harper Lake Road. Areas surrounding the Project Area include developed or disturbed lands, native Mojave creosote bush scrub and native saltbush scrub. Harper Dry Lake and associated shoreline vegetation intersects the northeastern corner of the Project Area.

The topography is generally flat with elevations ranging from approximately 2,025 to 2,105 ft. The Project Area is covered by older alluvium consisting of dry, loose-to-moderately dense, silty fine-to-coarse sand with occasional gravel; subsurface layers of silt and possibly clay are likely to be present (Ninyo & Moore, 2006). In general, the hydrology of the Project Area, which was originally characterized by washes flowing northeast into the dry lake, has been disrupted by long-term farming.

Conservation areas in the Project vicinity include the Harper Dry Lake Area of Critical Ecological Concern (ACEC), adjacent and northeast of the Project Area (Figure 2). U. S. Fish and Wildlife Service (USFWS)-designated desert tortoise critical habitat abuts or is near the Project in the north, west and south. The U. S. Bureau of Land Management (BLM) has also designated the Superior-Cronese Desert Wildlife Management Area (DWMA) abutting the southern boundary of the Project and a Mohave Ground Squirrel Conservation Area to the south and east that overlaps the DWMA.

1.2 Desert Tortoise Occurrence in the Project Area and Vicinity

Desert tortoise focused surveys were conducted in April and May of 2007, 2008, and 2009 according to USFWS desert tortoise survey protocol (USFWS 1992). The survey area changed each year with refinements in the Project footprint, but was always a subset of the broadest area surveyed in 2007 - the Biological Resources Survey Area (BRSA) - which also included a one-mile buffer around the BRSA (see Mojave Solar [2009], Figure 5.3b in Section 5.3). In 2008, the proposed Project Area was modified as a subset of the BRSA. Surveys in 2008 were conducted within an updated Project Area and out to one mile from the Project Area boundary. During 2009, supplemental protocol-level surveys for desert tortoise were conducted within select locations of the Project Area. (See Mojave Solar [2009] for a detailed description of surveys completed each year.)

The survey data (Figure 3) indicate that tortoises are unlikely to occupy the Project Area. Tortoise sign observed on the Project Area consisted of carcass parts and one full carcass of an immature tortoise; one old scat was observed in a center-pivot field, approximately 600 ft from the southern Project Area border. No recent scat and no burrows were observed. No live desert tortoise were documented on the Project Area during any focused surveys, although one tortoise was observed in the northeastern Project Area near a residence and along the southern Beta field border during surveys in 2006 for another project. Density on the Project Area is considered to equal zero. During the cumulative surveys, substantial quantities of tortoise sign were observed outside the Project Area to the east, west and south. (See Mojave Solar [2009], Section 5.3, for details of desert tortoise observations.)

2.0 Purpose, Background and Structure of the Plan

The purpose of this relocation/translocation plan (Plan) is to provide direction for the removal of tortoises from harm's way on the Project Area during all Project activities. A draft Plan was submitted to USFWS, the California Department of Fish and Game (CDFG), and the California Energy Commission (CEC) in March 2010 (Karl 2010a). USFWS provided comments on 26 April 2010 (USFWS 2010a); CDFG provided comments on 6 May 2010 (CDFG 2010). This was followed by discussions between CDFG (E. Weiss and T. Moore), USFWS (A. Blackford), and A. Karl (representing Mojave Solar) on 13 and 21 May 2010. Since those conversations, USFWS guidance has changed repeatedly, with new translocation guidance issued as recently as August 2010 (USFWS 2010b). This updated Plan incorporates the original agency comments, as well as changes reflected in the more recent USFWS (2010b) guidance[1]. Except where superseded by this recent guidance document and informal communications from USFWS, this Plan relies on formal guidelines from USFWS in December 2009 (USFWS 2009a). Finally, this version of the Plan incorporates relevant agency comments on a revised version submitted in November 2010. Because USFWS is in the process of analyzing desert tortoise translocation in general, relevant newer guidance will be incorporated into the Project relocation/translocation procedures as they become available.

Biologically, translocation refers to moving an animal outside its home range. For desert tortoises, males generally have been shown to have larger home ranges than females in studies of sufficient duration and sample size (O'Connor et al. 1994; TRW 1999a), approximately 111.6 acres (range: 10.4–487.8 acres) (45.2 ha; range: 4.2–197.5 ha) for adult males and 43.5 acres (range: 4.7–143.3 acres) (17.6 ha; range: 1.9–58.0 ha) for adult females. These areas result in home range diameters of 2482 ft (752 m) for males

[1] Although there have been many changes in USFWS policy since May 2010, MSP has received no formal or informal communications from CDFG since 6 May 2010 regarding CDFG translocation policy. However, based on conversations between Dr. Larry Lapre (BLM) and Dr. Karl, it appears that CDFG policy is consistent with the most recent USFWS (2010b) guidance. Mojave Solar is proceeding with this Plan under this assumption.

and 1554 ft (470 m) for females. Studies of shorter duration or with a smaller sample size found smaller home ranges (e.g., Burge 1977, Barrett 1990, O'Connor et al. 1994, Duda et al., 1999). Home ranges for both genders (Duda et al, 1999) and for males, only, in one study (TRW 1999), decreased significantly in drought years.

USFWS terminology regarding translocation has changed repeatedly in the past year, as has the distance within which tortoises are considered translocated. Currently, the USFWS is attempting to use the phrases "tortoises translocated >500 m" and "tortoises translocated <500m" for any tortoises moved off of project sites, including during perimeter fencing. They are using the phrase"tortoises moved out of harm's way" to describe tortoises that are moved off of linear facilities, such as access roads and pipelines outside a project site proper. This is not only awkward terminology for repeated use in a document, but it is likely to change again during USFWS' continued analysis of desert tortoise translocation. For the purposes of this Plan and ease of use, the following simple terms, which are consistent with the 2009 *Desert Tortoise Field Manual*, will be used:

- Relocation – Moving a tortoise out of harm's way to a point within that tortoise's home range. This would include tortoises moved <500m.
- Translocation – Moving a tortoise out of harm's way to a point distant from the tortoise's home range. This would include tortoises moved >500m.

The structure of this Plan is first to describe general procedures applicable to all tortoise relocations/translocations: data collected on all tortoises; tortoise transportation; authorized handlers; and reporting. The Plan then addresses desert tortoise clearance and translocation during various Project phases, from site perimeter fencing through construction, restoration activities following construction, operations, and Project decommissioning. The reader is advised that this Plan is for desert tortoise clearance and translocation only. Other actions associated with tortoise protection measures (construction monitoring, fence construction and monitoring, etc.) are included in other, relevant documents, such as the BA (DOE 2010) and CEC license (CEC 2010). All avoidance, protection, and minimization measures that are identified in other Project documents for other biological and cultural resources will be implemented in concert with this Plan.

3.0 Procedures Applicable to All Relocations and Translocations

3.1 Data Gathered on Relocated and Translocated Tortoises

Each captured tortoise will be processed at capture, prior to translocation. The gender, carapace length, width along the widest area between and inclusive of Marginals 5 and 6, height at the third vertebral, distinguishing morphology, clinical signs of disease, capture site location and description, and the amount of void, if any, will be recorded. In addition,

the tortoise will be photographed and drawn. All release site locations will also be recorded at relocation/translocation, along with their descriptions. All tortoise handling will be accomplished by techniques outlined in the USFWS *Field Manual* (2009a: Sections 7.6-7.8) and including the most recent disease prevention techniques (e.g., Wendland et al. 2009). Each tortoise will be assigned an individual number, with a number series to be provided by USFWS. Marking techniques will be approved by USFWS, but temporary marks using very small epoxy numbers (e.g., clear epoxy over a small, indelible number on a correction fluid [Wite-Out©] background) on a costal or interior marginal area that receives little to no abrasion are suggested, with a Project-specific identifier. Such numbers will last for several years, which will facilitate identifying specific tortoises if they are subsequently observed during Project maintenance or other activities, including repeated observations during construction (e.g., on the perimeter fence).

3.2 Transmitters

If needed for monitoring relocated or translocated tortoises, transmitters will be affixed to the tortoises. Holohil R1-2B transmitters (24 mm wide by 11 mm thick; 14.9 g; www.holohil.com) will be epoxied onto a carapace scute using five-minute gel epoxy. For males, transmitters will be affixed to the fifth vertebral; for females, transmitters will be affixed to the anterior carapace in the most appropriate location for the animal's shell shape that will preclude interference with righting. The transmitter antenna will be fed through a plastic sheath with a diameter slightly greater than the antenna. This sheath will be epoxied low on the carapace, just above the marginal scutes, and split at the scute seams (growth areas) to preclude distortion of the tortoise's shell during growth. This technique permits the antenna to remain protected from abrasion, but move freely, thereby not affecting tortoise growth. Juvenile tortoises will be similarly equipped but with smaller transmitters, appropriate for their mass and size (<10% of the tortoise's mass). Because the antenna sheath is tightly curved on a very small tortoise, potentially constricting antenna movement with subsequent growth distortion, much more of the antenna will remain free on small tortoises. These are proven techniques to minimize disturbance to the tortoise, refined and/or developed and used by Dr. Karl for more than 20 yrs and on over 300 tortoises and subsequently used at Fort Irwin for several hundred tortoises.

3.3 Tortoise Transportation and Holding

Tortoises that only need to be moved a few hundred feet will be hand-carried to the release site. Each tortoise that is hand-carried will be kept upright and the handler, wearing disposable examination gloves (one pair per tortoise), will move the tortoise as quickly and smoothly as possible. Tortoises that must be moved farther from the capture site or temporarily held in a climate-controlled situation will be sequestered in individual, sterilized tubs with taped, sterilized lids or single-use cardboard boxes with lids. During transport by vehicle, the tortoise tub will be kept shaded and the tub will be placed on a well-padded surface that is not over a heated portion of the vehicle floor. These measures are consistent with USFWS guidance (2009a: Section 7.10).

Should a tortoise void or defecate between capture and release, it will be thoroughly rinsed to remove potential attracting odors to predators. Then, it will be placed in a shallow bath of room temperature water to re-hydrate it, per USFWS guidance (2009a: Section 7.9). The tortoise's mass following this procedure will be recorded.

3.4 Handling Temperatures

Handling will adhere to USFWS (2010b) handling guidelines, which state that tortoises can only be handled when air temperatures, measured at 2 in (5 cm) above the ground (shaded bulb), are not expected to exceed 95°F (35°C) during the handling session. If the air temperature exceeds 95°F during handling or processing, desert tortoises will be kept shaded in an environment where the ambient air temperatures do not exceed 91°F (32.7 °C) and air temperature does not exceed 95°F. The desert tortoise will not be released until air temperature at the release site declines to 95°F.

Tortoises must go underground to escape surface heat at ground surface temperatures of 109°F (43°C) (Karl 1992) to 113°F (45°C) (Zimmerman et al., 1994). Because surface temperatures can easily exceed 109°F when air temperatures at two inches are still below 95°F, the more conservative temperature will govern all tortoise handling described in this Plan, to minimize harm to tortoises. In other words, the USFWS guidelines will be followed except in the situation where they exceed 109°F ground temperature.

USFWS (2009a, 2010b) has not provided guidance relative to handling temperatures for tortoises found during cold temperatures (e.g., less than approximately 50°F (10°C) except as they relate to moving the tortoise. This is addressed in the relevant sections below on relocation and translocation.

3.5 Authorized Handlers

USFWS describes a single designation for biologists who can be approved to handle tortoises - "Authorized Biologist" (AB) (http://www.fws.gov/ventura/speciesinfo/protocols_guidelines/docs/dt; USFWS 2009a). Such biologists have demonstrated to USFWS that they possess sufficient desert tortoise knowledge and experience to handle and move tortoises appropriately. Specific ABs will be approved to conduct specific tasks, including such specialized tasks as health assessments, blood sampling and transmitter attachment. Notwithstanding that the CEC only has designations for "Designated Biologist" and "Biological Monitor," only those biologists authorized by USFWS, CDFG, and BLM, presumably including the Designated Biologist and certain Biological Monitors, can conduct specific handling tasks on desert tortoises.

For USFWS, ABs are permitted to approve specific biological monitors (BMs) to assist in certain tasks, at their discretion, without further approvals from USFWS. Direct supervision from the AB (i.e., voice and sight contact) is required for all clearance

surveys and other specialized tasks. However, CDFG, BLM and CEC must also approve ABs, and BLM and CDFG will independently approve BMs for specific activities. .

4.0 Clearance and Relocation/Translocation During Specific Project Phases

Tortoise relocation/translocation that is necessary during Project construction may occur during initial perimeter fence construction, tortoise clearance from the Plant Site and Lockhart Substation (i.e., all facilities inside the Project Area), and initial grading on the Project Area. Based on the survey results, it is anticipated that no or very few desert tortoises would require removal from the Project Area. Tortoises may also be moved from harm's way during the SCE installation of the fiber optics line and associated poles. While unlikely, a tortoise could be found on the Project Area during operations. Relocation/translocation may also occur during decommissioning.

4.1 Project Area Perimeter Fencing and Temporary Fencing

Prior to the onset of Project Area tortoise clearance, both Plant Sites (Alpha and Beta Sites) and Lockhart Substation will be fenced with permanent, tortoise exclusion fence per USFWS (2009a) guidelines, to keep tortoises in habitat adjacent to the Project Area from entering during construction and operations phases. The permanent fence around the Plant Sites will also include the drainage channel. Tortoise exclusion fence will be attached to the MSP permanent perimeter fence. Exclusion fence material will be one-inch by two-inch vertical wire mesh fence, extending at least two feet above the ground and buried at least one foot. Although unlikely, where burial is impossible, the mesh will be bent at a right angle toward the outside of the fence, with the bent portion anchored by stakes and further held down by rocks and soil to prevent tortoises from digging under the fence. Tortoise-proof gates will be established at all site entry points, to remain closed except during entry by personnel. If shown to be effective and not potentially dangerous to tortoises, tortoise "cattle guards" may be installed instead of or in addition to gates.

Temporary fencing may be used to exclude tortoises until the permanent fence is installed. Currently, no Project-related construction is planned outside the facility, although some work (e.g., drainage channel crossing at Harper Lake Road) may occur. Should any work outside the fenced Project occur where tortoises are possible, temporary fencing may be installed where the AB believes that it would provide better protection than monitoring by BMs. Temporary fencing will follow guidelines and materials for permanent fencing except in very temporary situations, when silt fencing may be used. In both cases, supporting stakes will be sufficiently spaced (e.g., ≤8 ft for wire mesh; ≤5 ft for silt fencing) to maintain fence integrity. Fencing may be buried if it would not create a biologically significant disturbance, or bent outward at the ground level, with the bent portion tacked and/or held down by rocks and soil.

4.1.1 Project Area Perimeter Fencing Schedule

Project Area perimeter fencing is planned for installation prior to April 2011, with tortoise clearance and relocation/translocation beginning in April 2011. Should this schedule change, or construction phasing occur, then the same criteria expressed in this Plan to ensure that tortoises are safe during construction, clearance and relocation/translocation procedures still will be implemented.

4.1.2 Surveys and Monitoring during Fence Construction

Within 24 hours prior to fence installation, biologists will survey the staked fenceline for all desert tortoise burrows and tortoises, covering a swath of at least 90 ft centered on the fenceline, using 15-ft-wide transects. Tortoise burrows will be mapped using Global Positioning System (GPS), and the size and occupancy recorded; if not occupied, indications of how recently the burrow was used will be recorded. Burrows also will be flagged if they would not be likely to attract poaching. Burrows will be avoided if at all possible (especially if this is temporary fencing). But, if a burrow must be destroyed for fencing to occur, then it will be visually and tactilely examined for occupancy by tortoises and other wildlife. If occupancy is negative or cannot be established, the burrow will be carefully excavated with hand tools, using standardized techniques approved by USFWS (2009a) and the Desert Tortoise Council (1994). No burrows that can be avoided will be collapsed during perimeter fence construction.

All fence construction will be monitored by approved biologists to ensure that no desert tortoises are harmed. The level of monitoring will depend on the specific fencing activity, but at least one BM will accompany each separate construction team, such that no driving, trenching, fence pulling, or any surface disturbing activities will occur without the immediate presence of a BM. Maps of burrows from the pre-construction survey will be provided to all BMs to assist in protecting tortoises. Such maps will also be potentially useful for relocating tortoises.

Following the onset of the tortoise activity season, or if exclusion fencing is installed when tortoises are known to be active (for example, if unusually warm weather occurs in winter before fencing is completed), then all installed exclusion fence (partial or complete) will be checked ensure that no tortoise is trapped inside the Project Area. If fencing is installed during a warm period in winter, then all fencing will be checked twice daily, during the warmer periods of the day. Any tortoise would be relocated as described in Section 4.1.3, Tortoise Relocation Methods during Fence Construction, below. If fencing occurs during spring or summer (approximately 1 April through September), then all fencing will be checked 2-3 times daily during tortoise activity temperatures (between approximately 15 and 42°C ground surface temperature), for two weeks, to ensure that a tortoise is not inadvertently trapped inside. Tortoises would be passively or actively relocated as identified below in Section 4.1.3 and Table 1. If, for any reason, tortoise clearance surveys were delayed for several months after fencing, at least one clearance pass would be completed as soon as tortoises became active following the completion of fencing (e.g., April if fencing were completed in winter, immediately

afte fencing if fencing were completed from April through October); see Section 4.2.1, Clearance Surveys, below. These measures would ensure that no tortoise were trapped into the non-habitat inside the site following fencing.

4.1.3 Tortoise Relocation Methods during Fence Construction

Tortoises will be avoided if at all possible. Fence gaps and erection of temporary fencing will be used to "encourage" a tortoise to return to the outside of the fence. For instance, if an active tortoise is observed inside the Project boundary, construction and equipment can be temporarily moved to another section of the fence, a large gap can be left in the fence nearest the tortoise and a temporary (e.g., silt) fence can be quickly constructed from the gap edges well around the tortoise so that it moves through this channel to the outside of the Project. Following exit from Project Area, the tortoise would then be immediately monitored as identified below in Section 4.1.5, Post-Release Monitoring.

Any tortoise that must be moved during perimeter fencing will be relocated immediately outside the construction zone, but onto MSP land (Figure 4). Release points will be as close as possible to the capture point, to keep tortoises within their home range, but will always be on or immediately adjacent to suitable habitat. Specific release points cannot be identified at this time without knowing where tortoises are, but the highest likelihood of finding a tortoise along the perimeter fence is along the southern, eastern and northeastern border of the Beta Site and the western border of the Alpha Site (Figure 4).

Generally, tortoises will be placed in the shade of a shrub or, if known, in the entrance of that tortoise's burrow (but see below in the event that ambient temperatures are high). The most recent USFWS guidance (USFWS 2010b) states that all "perimeter fence" tortoises be moved to the interior of the Project Area. Because the solar project site has limited desert tortoise habitat and is expect to support few if any desert tortoises, which is supported by the limited amount sign and burrows on the proposed solar fields, it is believed that any individual found during fence construction maintains a territory outside of the solar project site and is utilizing the project area for foraging or movement. Therefore, desert tortoises on the MSP project found during fence construction will be placed outside of the solar project site rather than inside.

All tortoises relocated from harm's way during perimeter fencing will be transmittered as described in Section 3.2, above. The exception will be tortoises brumating (≈hibernating) in burrows during winter (see below for a discussion of handling tortoises outside of USFWS temperature guidelines).

USFWS guidance (2009a, 2010b) regarding translocation temperatures states that translocation occur when air temperatures at 2 in (5 cm) above the ground, are not forecast to exceed 90°F (32°C) within three hours of release and 95°F (35°C) within one week of release; additionally, daily low temperatures should not be cooler than 50°F (10°C). The rationale for the higher temperature constraints is that tortoises must find or dig new refuges in the potentially unfamiliar translocation area prior to the onset of lethal daily temperatures. Along the perimeter fenceline, however, tortoises would be moved

only a short distance, within their home ranges, where they are knowledgeable about the locations of refuges. USFWS (2010b) has agreed that relocation on linear facilities, including perimeter fencing, may occur during any time of the year. The only high temperature constraint is that no tortoise will be moved when air temperatures are expected to exceed 90°F (32°C) within three hours of release.

Although fence construction is currently planned for February to March 2011, schedules may change. Fence construction is permitted by USFWS for any time of the year, so air and ground temperatures will exceed lethal levels in the warmer months or may be lower than 50°F during some winter days and evenings. Contingencies must be in place in the event that a tortoise must be relocated. The following options to protect tortoises address potential contingencies during periods of high temperatures. (Note, however, that no tortoise would be moved when air temperatures exceed 95°F, except in an emergency.) A summary of these activities is found in Table 1.

- *If a tortoise is found under a shrub*, a temporary fence can be erected to keep the tortoise from entering the construction zone. The fence will be flagged to ensure avoidance. Fencing will be 1 by 2-inch mesh or other, adequate temporary fencing (e.g., silt fencing can be used for very short-term needs). If practical, the fence would be removed later in the day (or several days later if needed to protect the tortoise) when the tortoise could be allowed to move away from the construction area of its own accord (preferred) or safely moved If the tortoise must be handled, it would be processed and transmittered.

  If the AB determines that leaving the tortoise under a shrub would potentially result in overexposure to high temperatures and no burrow is known for that tortoise, construction in that area will halt and all personnel will depart. Construction can be resumed later in the day when air temperature has dropped below 95°F. Less preferably, the tortoise can be collected in a sterile, covered tub, held in a climate-controlled location (e.g., Project office), transmittered, and released in early evening, when air temperature has dropped below 95°F or the following morning. All boxed tortoises would be checked several times until release, to ensure their safety. All released tortoises would be visually monitored until they found a suitable burrow. At the AB's discretion, if this tortoise's burrow is known, the tortoise can be placed at that burrow and watched until it enters the burrow.

- *If a tortoise is in a burrow that can be avoided,* a temporary fence will be erected to keep the tortoise from entering the construction zone. The fence will be flagged to ensure avoidance.

- *If a tortoise is in a burrow* that *cannot be avoided by construction activities*, then the tortoise will be collected in a sterile, covered tub, held in a climate-controlled location (e.g., Project office) until early evening, when air temperature has

Table 1. Alternatives for Relocating or Translocating Tortoises Found During Periods of Ambient Temperatures Outside the USFWS (2009a, 2010b) Translocation Guidelines. Note that in all cases, no tortoises will be handled during air temperatures at two inches above the ground that exceed 95°F.

Project Phase	Project Activities	Alternatives for Relocation or Translocation[1]		
		During Periods of High Temperatures		During Winter[2]
		Tortoise Found Under Shrub	Tortoise Found In Burrow	
Construction	Construction of Project Area perimeter fence; tortoises on Harper Lake Road; SCE telecommunications upgrades and interconnection construction outside the Project boundary	• Relocate to known burrow; monitor • Erect temporary fence between tortoise and construction; monitor; remove fence when appropriate • Temporarily move construction to another area • Collect and hold in climate-controlled facility; release in evening or the following morning; monitor	• Erect temporary fence between tortoise and construction; monitor; remove fence when appropriate • If cannot be avoided, collect and hold in climate-controlled facility; release late afternoon/early evening or following morning; monitor	• If cannot be avoided, place tortoise in artificial burrow, temporarily block in and monitor; remove block at two weeks (or earlier depending on the weather) and monitor • If tortoise fails to find suitable winter burrow and will not use artificial burrow, hold in climate-controlled facility, in the dark at temperatures simulating burrow temperatures, until seasonal temperatures warm and tortoises are active; release within 100 ft of capture burrow; monitor
	Grading of Project Area; tortoises trapped inside Project Area after fencing	• Capture and hold in climate-controlled facility, contact USFWS and CDFG for direction	• Capture and hold in climate-controlled facility, contact USFWS and CDFG for direction	Not applicable
Operations	Plant Sites	• Capture and hold in climate-controlled facility, contact USFWS and CDFG for direction	• Capture and hold in climate-controlled facility, contact USFWS and CDFG for direction	Not applicable

	Access road, utilities maintenance	• Allow tortoise to proceed out of area unimpeded; monitor • Relocate to known burrow; monitor • Erect temporary fence between tortoise and construction; monitor; remove fence when appropriate • Temporarily move construction to another area • Collect and hold in climate-controlled facility; release in evening or the following morning; monitor	• Erect temporary fence between tortoise and construction; monitor; remove fence when appropriate • Collect and hold in climate-controlled facility; release late afternoon/early evening or following morning; monitor	• If cannot be avoided, place tortoise in artificial burrow, temporarily block in and monitor; remove block at two weeks (or earlier depending on the weather) and monitor • If tortoise fails to find suitable winter burrow and will not use artificial burrow, hold in climate-controlled facility, in the dark at temperatures simulating burrow temperatures, until seasonal temperatures warm and tortoises are active; release within 100 ft of capture burrow; monitor
Decommissioning	Project decommissioning and site restoration, outside fenced areas	• Relocate to known burrow; monitor • Erect temporary fence between tortoise and construction; monitor; remove fence when appropriate • Temporarily move construction to another area • Collect and hold in climate-controlled facility; release in evening or the following morning; monitor	• Erect temporary fence between tortoise and construction; monitor; remove fence when appropriate • If cannot be avoided, collect and hold in climate-controlled facility; release late afternoon/early evening or following morning; monitor	• If cannot be avoided, place tortoise in artificial burrow, temporarily block in and monitor; remove block at two weeks (or earlier depending on the weather) and monitor • If tortoise fails to find suitable winter burrow and will not use artificial burrow, hold in climate-controlled facility, in the dark at temperatures simulating burrow temperatures, until seasonal temperatures warm and tortoises are active; release within 100 ft of capture burrow; monitor

[1] See the text for the details of each alternative.
[2] Winter is defined as the period when tortoises are brumating, approximately 1 November to 1 April.

dropped below 95°F. At that time, the transmittered tortoise will be released outside the Project Area fence within a few feet of the point of collection. It will be followed until it either finds a suitable burrow or night falls. (If this exercise occurs in the morning, the threshold will be air temperatures exceeding 95°F.) If no suitable burrow has been found, the tortoise would be again tracked in the morning until it finds a suitable burrow or the threshold temperature has been reached. If the latter occurs, the tortoise will again be collected and the process repeated that evening. Because tortoises use many burrows, it is anticipated that the tortoise would locate a suitable burrow quickly.

If fencing occurs during winter when tortoises are inactive (approximately 1 November to 1 April), tortoises found in burrows will be avoided, and the burrow fenced with high visibility fencing (if this would not attract poaching) and mapped on construction drawings; a biological monitor will continually monitor the burrow and fence while construction is proceeding in the immediate area of the burrow, to ensure tortoise safety (Table 1). The high visibility fencing will be removed once all danger of construction is past. A brumating tortoise will not be removed from its burrow for the sole purpose of transmittering it. If a tortoise in a burrow that cannot be avoided[2] and tortoises are still in brumation, then an artificial burrow that replicates the capture burrow (i.e., location relative to a shrub, direction, length) will be constructed as nearby as possible outside the Project fence and in an area where construction has finished (i.e., the tortoise will not be disturbed). All burrows that cannot be avoided will be completely excavated using standardized techniques approved by USFWS (2009a) and the Desert Tortoise Council (1994). The tortoise will be captured at night, affixed with a transmitter and placed in the artificial burrow along with soil and scat from the capture burrow. The tortoise will be blocked into the burrow for two weeks (unless the weather warms, in which case the barriers will be removed), at which time the blocks will be removed and the tortoise continually monitored to ensure that it either remains in the burrow or finds another suitable burrow. If the tortoise fails to find a burrow in several days, and the nighttime air temperatures fall below approximately 50°F, then it will be captured and held in a climate-controlled, dark, quiet, and safe location (e.g., room in Project office) at an air temperature equivalent to the air temperature one meter inside a natural burrow, until seasonal temperatures warm and tortoises are observed to be active in the area. At that point, it will be released within 100 ft of its capture burrow and monitored as described in Section 4.1.5, Post-Release Tortoise Monitoring, below.

Any tortoise found aboveground during winter is highly likely to be near its burrow, except during extended periods of warm weather. A transmitter will be affixed to the tortoise and it will be tracked daily until it is established that the tortoise is sequestered in a suitable burrow.

[2] This could occur where the permanent fence was the first and only perimeter fence constructed.

4.1.4 Health Considerations

Visual health assessments will be conducted on all tortoises relocated during site fencing (i.e., moved <500 m), by an experienced biologist approved by the USFWS. USFWS (2010b) guidance and later e-mails from USFWS (T. Englehard, pers. comm. to A. Karl) have identified that no tortoise will be relocated within 1.5 km (0.9 mi) of a diseased resident tortoise because relocated tortoises may move 1.5 km after translocation. Mojave Solar will comply with the requirement to complete a 100%-coverage survey for resident diseased tortoises within 1.5 km of any relocated tortoise (Figure 4). However, surveying for such resident tortoises would be problematic during the anticipated time when fence construction is occurring (February-March 2011). Also, USFWS' rationale is highly unlikely to apply to the Project, since any tortoise that must be relocated from the Project Area likely will be moved only a few meters. The USFWS anticipates that such "relocated tortoises typically remain within their home range" (USFWS 2010b:27). Based on these factors, alternatives may be discussed with USFWS following relocation of all tortoises during perimeter fencing activities.

No tortoise with clinical signs of mycoplasmosis will be relocated. Schumacher *et al.* (1997) observed that clinical signs had a high statistical correlation with positive serology (i.e., exposure to *Mycoplasma agassizii*). A mucous nasal discharge was the clinical sign that was the most reliable predictor (93% of tortoises with a mucous nasal discharge were seropositive), although it could be caused by pathogens other than *M. agassizii*. Furthermore, a purulent nasal discharge was the only clinical sign that was relatively objective; other clinical signs were far more subjective, were potentially present for other reasons, and reduced the statistical predictability of positive serology. For the MSP, a purulent nasal discharge will be the threshold to identify a diseased tortoise, unless USFWS determines that other clinical signs should be used for diagnosing a diseased tortoise.

Desert tortoises determined to be infectious or unhealthy will be sent to the Desert Tortoise Conservation Center (DTCC) or other USFWS-approved facility where they will undergo further assessment, treatment, and/or necropsy. Mojave Solar will provide a flat fee of $9,000 for each desert tortoise sent to the DTCC commensurate with the cost to provide housing, care, treatment, and other services for five years ($3,000 for Year 1, $1,500 for Years 2 to 5).

4.1.5 Post-Release Tortoise Monitoring

While tortoises moved a short distance from construction activities along the perimeter fence would be assumed to be within their home range and familiar with burrow locations, they would receive immediate post-release monitoring. This may be especially critical for juvenile tortoises, which are highly subject to depredation. Any tortoise moved will be watched for at least one hour to determine if it is behaving safely (e.g., seeking shade or a burrow) or if it is likely to try and re-enter the construction area. Because each relocated tortoise will have a transmitter, it will also be located via

telemetry for the next two days during tortoise activity temperatures to ensure that the tortoise is not fence-walking and is using burrows. .

As described above in Section 4.1.3, Tortoise Relocation Methods during Fence Construction, any tortoise moved in the evening during a period when daily air temperatures exceed 95°F (late April through early October) will be followed until it either finds a suitable burrow or night falls. (If this exercise occurs in the morning, the threshold will be air temperatures exceeding 95°F by which a tortoise must find a suitable burrow.) If it has not found a suitable burrow, the tortoise would be again tracked in the morning until it finds a suitable burrow or the threshold temperature has been reached. If the latter occurs, the tortoise will again be collected, held in a climate-controlled environment and the process repeated that evening.Because tortoises use many burrows, it is anticipated that the tortoise would locate a suitable burrow quickly.

USFWS (2010b) requires a five-year monitoring program for translocatees, including tortoises removed from the perimeter fence. Mojave Solar will monitor all transmittered tortoises for five years from the time of relocation/translocation. Based on multiple Project surveys, it is assumed that fewer than five tortoises will be part of the study. USFWS (2010b) has determined that no resident and control study cohorts are required for fewer than five translocatees. The Ventura Field Office (VFO) requires that juveniles be counted in the total for monitoring but recognizes the difficulty in obtaining juvenile control and recipient cohorts. So, if mostly juveniles are translocated, then USFWS will consider a modification of the five-year monitoring program. If five or more desert tortoises are translocated from the project site, Mojave Solar will work with the BLM, CDFG, and Service to identify appropriate locations for control and resident desert tortoise monitoring.

Based on the requirements from the USFWS (2010b), the following elements will be part of the monitoring program:

- Tortoises will be located by telemetry according to the schedule identified in USFWS (2010b) guidelines. Each time the tortoise is located, the behavior, location (UTM), and burrow description (if any) will be recorded.

- Survival and general health will be monitored through body condition indices (mass to volume ratios), clinical signs of disease, serology, and inspection for injuries. Any time a tortoise is handled, it will be examined for clinical signs of disease. Formal health assessments will be conducted during April (following brumation), July (following oviposition), and October (prior to brumation). At these times, body condition (mass to volume ratio) also will be measured (mass, carapace length, width at Marginal 5 or 6, height).

- Blood samples will be taken and analyzed annually, in July or October. An approved biologist will conduct the assessments and tissue sampling. While

blood samples are not required of tortoises moved <500 m during relocation, blood will be sampled shortly after relocation[3] in order to provide baseline data.

- Sampling frequency and techniques for disease analysis will be updated as necessary during the study, based on the newest disease information from this and other studies. This may include tests for other pathogens (e.g. *Mycoplasma.* spp., herpesvirus, iridovirus) as their importance and evaluation techniques become validated for desert tortoises. Data will be recorded on a data sheet similar to that in Appendix 1, with an additional health assessment data sheet to be provided by USFWS.

- Any health problems observed (*e.g.*, rapid declines in body condition, perceived outbreaks of disease, mortality events) will be reported to the USFWS, CDFG and BLM[4] such that appropriate actions can be taken in a timely manner.

- Should a transmittered tortoise die, the cause of death will be determined to the extent possible. This information, along with the location and any other analysis that could assist the USFWS, CDFG, BLM and DOE will be provided to these agencies within 48 hours, verbally, or five business days, if by e-mail. All fresh carcasses will be salvaged and frozen. They will be submitted for necropsy upon direction from USFWS, CDFG, and BLM; DOE will also be notified.

- Transmitters will be changed as necessary.

USFWS' stated purpose for this study is "to evaluate the effectiveness of translocation as a take minimization measure" (USFWS 2010b). Part of USFWS' rationale for monitoring perimeter fence tortoises is to assess the impact of the new barrier to movement in their home range (A. Blackford, USFWS, pers. comm. to A. Karl). Recognizing the site-specific conditions (i.e., the existing and historical agriculture is already a barrier to use), as well as the anecdotal results from such a small study cohort, USFWS has expressed interest in discussing other research questions. Mojave Solar offers the following research questions for discussion, if fewer than five tortoises are moved:

1. **What is the survival of tortoises following relocation and short-distance translocation until tortoises settle into home ranges?**

---

[3] USFWS (2010b) requires that blood sampling be conducted no sooner than 15 May, "based on activity of the immune system." This premise is currently under scrutiny (e.g., e-mail from M. Brown, University of Florida Mycoplasma Lab, to K. Fields, USFWS, 8 October 2010).

[4] Although no relocation sites are located on BLM land, these sites are immediately adjacent to BLM land, so most relocated tortoises will use BLM land. One translocation site is on BLM land. Consequently, BLM will be included in all decisions relative to tortoises in relocation/translocation areas.

Background and Rationale - Tortoises that may be relocated or translocated from the Project Area currently reside outside the site, as evidenced by the complete lack of burrows and only one old scat within 200 m of the border in three years of surveys (not including the 2006 reconnaissance). Therefore, since tortoises in the area are already accustomed to the area outside the site, moving them outside again, should they happen to be on the site at the time of clearance, merely moves them into an area with which they are already familiar. It seems far-fetched to assume that they would experience the same stressors that a tortoise translocated into unfamiliar territory would experience. So, mortality or harm due to relocation or translocation seems highly unlikely.

Approach - Mojave Solar would monitor all transmittered tortoises for 2.2 years, from the time of relocation/translocation (expected March 2011) through May 2013. All monitoring elements described above for the USFWS monitoring program would form the basis of the monitoring program. A period of 2.2 years is being proposed because two translocation studies have identified that translocated animals exhibit similar movement patterns as resident animals (i.e., settle into new home ranges) in approximately nine months to two years following translocation to an unfamiliar area (Nussear 2004, Karl and Resource Design Technology, 2007)

2. **How do tortoises respond to a large barrier fence in their home range following relocation and short-distance translocation?**

Rationale – In general, to answer this USFWS question, it would be useful to monitor tortoises that live in the immediate area of the fence more closely than the weekly and bi-weekly schedule proposed by the USFWS. This would provide information on a tortoise's use of the area relative to the tortoise's proximity to the fence. A temporal component would provide information on how that use changed following fence installation.

At MSP, tortoises already do not use the Project Area because long-term agriculture has virtually eliminated tortoise habitat there; even the center-pivot corners and former residential area in the north are very small and disturbed. So, the Project presents a special situation whereby the Project fence should have a negligible effect on normal tortoise behaviors.

Approach - Mojave Solar would track all transmittered tortoises twice a day during the height of the activity season (March to May and October-November). (During the remainder of the year, the monitoring schedule for #1, above would be maintained.) Wildlife cameras might be used to augment fenceline sampling for tortoises that reside very close to the fence, or were frequently found there. The study would last the same length of time as #1, above. All locations and behavior would be recorded. Data analysis would examine the density of above-ground locations and burrows with respect to distance from the fence; covariates would include time since translocation, gender, and tortoise size.

Per USFWS (2010b) guidelines, triggers for implementation of adaptive management will be developed through coordination with USFWS, CDFG, BLM and DOE.

4.1.6 Nest Relocation

Any nests found between November 1 and April 15 are unlikely to be viable and will not be moved; hatching is typically completed by October. In the event that nests are found between April 15 and October 31, the nests will be moved. Eggs will be inspected to determine if they are viable and, if so, will be moved to an identical microsite (e.g., cover, plant species, soil type, substrate, aspect) on the approved Translocation Site (see Section 4.2.2, Translocation Release Areas and Designated Translocated Site, below) using standard techniques (e.g. Desert Tortoise Council 1994, USFWS 2009a). Translocated nests will be fenced with open-mesh fencing (e.g. 2-inch wide mesh) that will permit hatchlings to escape but prevent depredation by canids that might be attracted to the new nests by human scent predator entry. Open-mesh fencing or avian netting also will be installed on the roof of the nest enclosure to prevent predator entry. Nests will be monitored from a 30-foot distance once a month until late November, at which time they will be excavated for examination. If possible, hatchlings will be weighed, measured, photographed, described and marked.

4.1.7 Monitoring Fence Integrity

All permanent exclusion fencing will be inspected monthly and immediately after all rainfall events where soil and water flow through washes or overland and could damage the fence or erode the soil underneath. Temporary fencing will be inspected at least weekly if construction is occurring; if there is a delay in construction, temporary fence inspections will follow the same schedule as for permanent fencing. Any damage to the fencing will be repaired immediately. If it cannot be repaired immediately, any gaps that are open to tortoise habitat will be continuously monitored until the gap can be repaired, to ensure that a tortoise has not entered the site through the gap.

4.2 Plant Sites and Associated Facilities inside the Project Area

4.2.1 Clearance Surveys

A clearance survey for tortoises will be conducted inside the completed perimeter Project boundary tortoise fence or suitable temporary fence. Clearance surveys will coincide with heightened tortoise activity to maximize the probability of finding all tortoises. These periods occur from April through May and during late September through October (and often into early November).

Currently, Project Area perimeter fencing is planned for installation in Winter 2011, with tortoise clearance and relocation/translocation beginning 1 April, or as soon as tortoises in the area are found to be consistently active. (Clearance earlier than 1 April would have to be approved by USFWS and CDFG.) Construction is scheduled to begin after tortoise clearance, probably from July to September 2011. Surveys would begin approximately 1

April, with two passes completed by approximately 10 April. For tortoise translocation to be successful in spring, clearance must be completed in early April to meet appropriate translocation temperatures. Tortoises must be relocated or translocated from the Project Area at least one week before daily, midday temperatures are expected to exceed 95°F (35°C) air temperature (at 2 in) or 108°F (42°C) ground surface temperature (see discussion in Section 4.1.3, Tortoise Relocation Methods during Fence Construction, above) whichever is lower. The rationale is that tortoises must find or dig new refuges in the potentially unfamiliar translocation area, prior to the onset of lethal daily temperatures. Mojave Solar intends to begin grading the entire Project Area after tortoise clearance surveys, so all tortoises must be removed prior to grading.

Should this schedule change, or construction phasing occur, then the same criteria expressed throughout this Plan to ensure that tortoises are safe during construction, clearance and relocation/translocation procedures will be implemented for separate phases. It is always important to consider that Project scheduling may change, resulting in Project Area clearance surveys being conducted outside temperatures that are higher than the USFWS guidelines for translocation. For instance, tortoises are very active (i.e., available for surveying) well past the period when it is safe to translocate in spring. Likewise, during September, high activity will likely occur prior to safe, autumn translocation temperatures. Generally, in either event, any tortoise found typically would be monitored onsite, via telemetry, until the next period when ambient temperatures permitted translocation. . However, because there is so little habitat on the Project Area, and arguably not enough to support a tortoise, if fencing is completed from April through September, then clearance surveys will occur immediately after fencing is complete to ensure that no tortoise is trapped inside the Project boundary. (Note also that fence checks would be conducted twice daily for fence-walking tortoises – see Section 4.1.2, Surveys and Monitoring during Fence Construction, above.) It would be prudent to consider relocating or translocating this tortoise prior to the following "safe" translocation period. So, if a tortoise is observed during clearance surveys when ambient temperatures are likely to be too high for translocation (i.e., mid-April and early October), then: (1) the tortoise will be "encouraged to exit the Project Area by the use of openings in the fence and temporary corrals (see Section 4.1.3, above); or (2) the tortoise will be monitored onsite to see if it has a burrow and could be reasonably monitored onsite until the following safe translocation period; or (3) CDFG and USFWS will be contacted to determine methods of release for that tortoise. If, through monitoring onsite, the tortoise is found to have one or more burrows and ample forage, it would be tracked at least once per week during high activity seasons (April through June, September) and twice per month during diminished activity seasons (July and August), until translocation.

Per USFWS (2010b) guidelines, a minimum of three, 100% coverage clearance passes will be completed. For the Project Area to be deemed cleared of tortoises, no additional tortoises may be found on the two, final, consecutive clearance passes. If a tortoise is found on one of these passes, two clean passes (i.e., no new tortoises) must follow before the Project Area can be declared to be cleared of tortoises. In this event, and because of the broad fields of non-habitat, it would not be necessary to complete another clearance

of the entire Project Area, but instead only that portion of the site where the tortoise was found. For instance, if a tortoise were found in a center pivot corner, where degraded relict habitat remains, that corner, as well as all other connected habitat and a several hundred meter band into the farmed field, would be searched.

Clearance transects generally will be 15 ft wide. Transects narrower than 15 ft wide will be used if dictated by dense shrub vegetation or where visibility is otherwise compromised. Wider transects during the second and third passes may be requested of USFWS on the shrub-less crop fields, depending on the height and nature of the vegetation there and the results of the first clearance pass. On each subsequent pass, an attempt will be made to view all shrubs and the terrain from as many angles as possible. To achieve this, transects programmed into GPS units will be either perpendicular, parallel but offset, and/or approached from the opposite direction on each subsequent pass (Karl and Resource Design Technology, Inc., 2007).

All tortoise sign will be mapped and evaluated (e.g., type, age, size) during all passes, and all scat collected. During subsequent passes, areas where fresh scat is found will prompt concentrated searches. After the second pass, concentrated searches will be conducted in all areas where recent sign is concentrated, unless a tortoise has been found in that area.

No burrows will be collapsed until the third pass, assuming that all tortoises probably have been relocated from the Project Area. (Fresh burrows used by other wildlife, including badgers or foxes, will not be collapsed until occupants have been removed via active or passive techniques approved by CDFG.) While clearance is planned to occur when ambient temperatures are safe for translocating tortoises, ambient temperatures may rise unexpectedly during the second pass such that a tortoise or other wildlife might be trapped in the open if its burrow has been excavated and collapsed during the search effort. To assist the identification of currently used burrows, all burrows will be inspected and assessed for occupation or recent use by tortoises during the first two passes, gated with small sticks along the entrance to detect future use, mapped and flagged. On the third pass, burrows will be completely excavated using standardized techniques approved by USFWS (2009a) and the Desert Tortoise Council (1994). During excavation, attention will be given to potential tortoise nests (see Nest Relocation, below).

Once all tortoises have been translocated from the Project Area, heavy equipment will be allowed to enter the site to conduct construction activities. However, the Project AB(s) will be continuously available during the construction period to remove any tortoises overlooked during the clearance surveys.

4.2.2 Translocation Release Areas and Designated Translocation Sites

Based on the multi-year surveys (Figure 3), it is highly likely that any tortoises found on the Project Area would be close to the Project Area borders, so few tortoises are likely to be moved >500 m (1650 ft) (Figure 4). Those moved <500 m will be relocated

immediately outside the perimeter fence, onto suitable habitat on MSP land. Release points will be as close as possible to the tortoise's capture location, to keep tortoises within their home ranges. These locations cannot be specifically predicted, since surveys did not find any tortoises or burrows in the Project Area. However, based on habitat quality and observed tortoise sign (Figures 2 and 3), the release points most likely would occur along the southern, eastern and northeastern border of the Beta Site and the western border of the Alpha Site (Figure 4).

There is very little area inside the Project Area that is further than 500 m from the boundary (Figure 4). However, much of the Project boundary does not have suitable habitat into which to move a tortoise, even if it were <500 m from the border. Where tortoises must be moved >500 m, they will be translocated to individual pens in one of two designated Translocation Sites. USFWS (2010b) has mandated that any tortoise moved >500 m must be quarantined onsite or offsite until the serology lab report is obtained in mid to late May. Onsite quarantine is not possible on the Project Area because there is not sufficient habitat onsite to support a tortoise. Furthermore, all areas inside the perimeter fence will be graded following tortoise clearance. Two translocation sites were chosen, one on each side of Harper Lake Road, to minimize post-translocation movements of tortoises across that road. All tortoises west of Harper Lake Road will be moved to the Translocation Site in Section 25, on land owned by Mojave Solar. All tortoises east of Harper Lake Road will be moved to the Translocation Site in Section 4, in the BLM DWMA and ACEC. Translocation to a DWMA or ACEC is preferred by CDFG, and BLM has agreed to move the few potential tortoises from MSP to BLM land (L. Encinas, pers. comm.). While the Translocation Sites constitute the release areas for tortoises moved >500 m, each Translocation Site plus surrounding area to 6.5 km (per USFWS 2010b) collectively would be considered a Translocation Area. This area meets the following critical requirements for an appropriate translocation site:

- Acclimation by translocatees would be facilitated by site familiarity, since tortoises currently live outside the Project Area, very likely all in the Translocation Area.

- The Translocation Sites are within the same population as the Project Area, so genetic, morphological and behavioral integrity would be maintained.

- The Translocation Sites are immediately adjacent to, in, or very near areas receiving moderate protection from BLM.

- The Translocation Area is part of a broad expanse of occupied tortoise habitat, sufficient to accommodate a few translocated tortoises. Tortoise populations are currently well below carrying capacity throughout their documented range, including the western Mojave Desert, due to a long-term drought and other factors (Karl 2004 and 2010b, McLuckie et al. 2006, Boarman et al. 2008). Based on the pattern of rangewide and local declines, it is likely that tortoise densities in the Project vicinity have similarly declined, so long-term carrying capacity would not be exceeded by the addition of a few tortoises. USFWS (2010b) has estimated that

adult tortoise density in any Translocation Area should not exceed 130% of the current density, which was recently estimated as 2.7 tortoises/km^2 for the Fremont-Kramer DWMA and 6.3 tortoises/km^2 for the Superior-Cronese DWMA (USFWS 2009b). This would translate into a maximum allowable density (130%) of 3.5 and 8.5 tortoises/km^2, respectively, or the addition of one tortoise to the Fremont-Kramer DWMA and two tortoises to the Superior-Cronese DWMA. However, this exercise is irrelevant for the MSP because, although one to few tortoises may be translocated from the Project Area, they would not be *added* to the population since they already live in the Translocation Area. In conclusion, then, since no tortoises are known to live on the Project Area, there is no chance that tortoise density in the Translocation Area would exceed the allowable 130% threshold or carrying capacity following translocation of tortoises from the Project Area.

The Translocation Site pens will be sufficiently large to support each tortoise pending disease testing results. Each will be a minimum of 165 x 165 ft (50 by 50 m), thereby providing adequate forage and sufficient habitat for a tortoise to find and/or construct adequate cover sites. Pens will be constructed using double-walled, 1 by 2 inch tortoise-proof fencing, installed as identified in Section 4.1, Project Area Fencing and Temporary Fencing, above. They will be separated by a minimum of 100 m so that tortoises will not be crowded once the fences are removed (if tortoises are seronegative) and tortoises fully released. Prior to Project Area clearance, pen design and an animal husbandry plan for penned tortoises will be approved by experienced personnel from an accredited American Zoological Association institution and approved by USFWS, BLM, and CDFG. While design will be pre-approved, pens will not be constructed until after that clearance pass on which tortoises are found, because it is highly unlikely that pens will be needed at all. All pens will be surveyed prior to and following their construction to ensure that no resident tortoises inhabit the pen.

4.2.3 Translocation Methods

All tortoises relocated or translocated from the Project Area will be measured, weighed, assessed for health, and affixed with a transmitter at the time of initial capture, and transported as described in detail in Section 3.0, Procedures Applicable to All Relocations and Translocations, above. Transmittered tortoises will be located daily the first week after transmittering and weekly thereafter until relocation or translocation.

All tortoises will be relocated or translocated at least one week before daily, midday temperatures are expected to exceed 95°F (35°C) air temperature (at 2 in) or 109°F (43°C) ground surface temperature, whichever is lower. This is expected to occur following the second clearance pass. No tortoise will be moved when air temperatures are expected to exceed 90°F (32°C) within three hours of release (USFWS 2010b).

All translocated tortoises will be rehydrated within 12 hours prior to release, via USFWS (2009a) methods.

All tortoises moved <500 m (1650 ft) will be placed in the shade of a shrub[5] or at the entrance to a known burrow for that tortoise, and monitored as described in Section 4.2.5, Post-Release Tortoise Monitoring, below.

Any tortoise found further inside the Project Area than 500 m will be transmittered and monitored daily for one week to determine if it typically lives that far inside the Project Area or if the observed location was outside its core use area. If its burrows or core use areas are closer to the perimeter fence than 500 m, or outside the fence (i.e., the tortoise fencewalks), it will be relocated as identified above for tortoises moved < 500 m.

Any tortoise translocated >500 m will be placed in an individual quarantine pen in the relevant Translocation Site (see above), under a shrub or near an artificial burrow. Two artificial burrows, each at least 4 ft (1.2 m) long, will be constructed for each tortoise, using a gas-powered auger or shovel/plywood, per USFWS (2009a) guidance.

Moving tortoises from the Project Area to the Translocation Site following the second clearance pass in April will ensure that tortoises are moved well prior to lethal temperatures. Because blood samples must be collected on tortoises moved >500 m (see Section 4.2.4, Health Considerations, below) and blood sampling cannot occur prior to 15 May (USFWS 2010b) [5], if tortoises were left on the Project Area until blood samples could be collected, then the spring translocation temperature window would be missed. If lab results are negative for exposure to *M. agassizii*, then the pen fence simply will be removed, thereby passively releasing the tortoise. This method ensures that tortoises are moved only once during the translocation process.

Juvenile tortoises, especially those under 4.4 inches (110 mm) in length, are highly subject to depredation by canids, badgers, and ravens, and require special consideration for successful translocation. Little is known about juvenile tortoise movements. Based on two studies of hatchling and/or juvenile tortoises, the mean distance translocatees moved in approximately one month was 521-723 ft (158-219 m; Hazard and Morafka 2002). For non-translocated hatchlings, the distance between nests and first-year hibernacula was 304-350 ft (92-106 m; TRW 1999b). Based on these values, as well as other data reported in these studies, a juvenile tortoise moved farther than 330 ft (100 m) may be outside its recent or familiar use area. For MSP clearance, if juvenile tortoises are moved within 330 ft of the capture location, where they may have site familiarity, they will be released under a shrub and monitored initially as described in Section 4.2.5, Post-Release Tortoise Monitoring, below. For distances >330 ft, they will be moved to the Translocation Site into a predator-proof enclosure, using 5-ft-tall "Non-Climb", 2 by 4 inch vertical mesh fencing, buried at least 1 ft. and with avian netting over the top. The size of the enclosure would depend on the number of tortoises found, but would be a

[5] In past relocation/translocation efforts, an artificial burrow has typically been constructed for tortoises. However, relocated and translocated tortoises do not use these burrows and it is anticipated that most tortoises removed from the Project Area will be relocated to areas where they have known burrows. Therefore, no artificial burrows will be constructed for relocated tortoises.

minimum of 20 ft in diameter, extending to 50 ft or more, as necessary, to accommodate more juvenile tortoises. (Morafka *et al*. 1997 successfully penned juvenile tortoises at the rate of 62-123 tortoises per acre (152-305 animals per hectare). After tortoises have become familiar with the site's odors and landmarks for at least two weeks, escape holes will be opened in the lower edge for tortoises to escape passively (e.g., Morafka et al. 1997). Modifications to the design and process may occur in response to predator interest in the enclosure or juvenile tortoise behavior in the enclosure, incorporating new and relevant head-starting techniques used at Twentynine Palms Marine Corps Air Ground Combat Center.

This Plan recognizes that a tortoise may be found in the Project Area during site grading or routine fence monitoring, at ambient temperatures that are higher than the USFWS translocation guidelines. In such cases, the disposition of the tortoise will be determined by the AB, in consultation with USFWS and CDFG. In any case, the tortoise will be captured, secured in an individual, sterilized box and temporarily placed in a quiet, climate-controlled environment (e.g., the onsite Project office). Depending on temperatures and other factors, it is possible that the tortoise could be affixed with a transmitter and relocated outside the Project Area or translocated into the Translocation Site the same day, when temperatures subside (or the following morning for juvenile tortoises), and monitored to ensure its safety. Options are provided in Table 1. If the tortoise would likely be harmed or die, it will be held in captivity at a location approved by USFWS and CDFG, away from other tortoises, to be released into the Translocation Site during the next available window. Other options will also be investigated. The goal of the translocation is to keep the tortoise in the population, in order to promote recovery.

4.2.4 Health Considerations

Health assessments will be conducted on all tortoises relocated or translocated during Project Area clearance, by an experienced biologist approved by the USFWS. No tortoise with clinical signs of mycoplasmosis will be relocated. Schumacher *et al.* (1997) observed that clinical signs had a high statistical correlation with positive serology (i.e., exposure to *Mycoplasma agassizii*). A mucous nasal discharge was the clinical sign that was the most reliable predictor (93% of tortoises with a mucous nasal discharge were seropositive), although it could be caused by pathogens other than *M. agassizii*. Furthermore, a purulent nasal discharge was the only clinical sign that was relatively objective; other clinical signs were far more subjective, were potentially present for other reasons, and reduced the statistical predictability of positive serology. For the Project, a purulent nasal discharge will be the threshold to identify a diseased tortoise, unless USFWS determines that other clinical signs should be used for diagnosing a diseased tortoise.

Tortoises moved <500 m (1650 ft) will only have visual health assessments. Tortoises moved >500 m will also have blood samples collected. Blood samples (no more than 2 cc) will be collected via standardized techniques of brachial or subcarapacial venipuncture (University of Florida, Department of Pathobiology, no date) to test for the presence of antibodies to *M. agassizii* and other pathogens. Whole blood will be

centrifuged and the plasma packaged on ice and sent overnight express freight to the University of Florida Mycoplasma Research Lab for analysis. USFWS (2010b) has determined that blood sampling on translocated tortoises cannot be collected until 15 May[5]. If this should change, then tortoises will be sampled as early as permitted. Only experienced, approved persons who have been previously permitted to conduct this work on desert tortoises will be permitted to collect the samples.

Desert tortoises relocated or translocated from the Project Area that have clinical signs of disease or are seropositive will be sent to the Desert Tortoise Conservation Center (DTCC) or other agency-approved facility where they will undergo further assessment, treatment, and/or necropsy. Mojave Solar will provide a flat fee of $9,000 for each desert tortoise sent to the DTCC commensurate with the cost to provide housing, care, treatment, and other services for five years ($3,000 for Year 1, $1,500 for Years 2 to 5).

USFWS (2010b) and more recent communications (T. Engelhard, pers. comm. to A. Karl) have mandated that if a diseased or seropositive resident is within 1.5 km (0.9 mi) of a relocated tortoise or 6.5 km (4.1 mi) of a translocated tortoise, then the relocation site (or translocation site) must be moved. The rationale given is that relocated tortoises may move 1.5 km after relocation and translocated tortoises may move as much as 6.5 km. This rationale is highly unlikely to apply to MSP, since any tortoise that must be relocated or translocated from the Project Area is likely a transient; most would be moved only a few meters. Per USFWS (2010b) guidance, Mojave Solar will conduct a 100% coverage survey for all diseased or seropositive residents within 1.5 km of any release site for a relocated tortoise (Figure 4) and within 6.5 km of the translocation site to which a tortoise is translocated (Figure 5). However, recognizing the unusual, site-specific conditions for the Project, USFWS, CDFG, and BLM have agreed to consider alternatives for this measure based on the number and distance of tortoises actually moved.

Mojave Solar would conduct surveys for resident tortoises during the second clearance pass (assuming that tortoises have been observed inside the Project Area) based on locations of tortoises found inside the Project Area – these would determine release sites and if the Translocation Site is likely to be needed.

All resident tortoises within 1.5 km of a relocation site and 6.5 km of a translocation site will be processed (weighed, measured, described, photographed), marked with an epoxy number for future identification and their health assessed. If any tortoises from the Project Area are moved more than 500 m, then all resident tortoises within 6.5 km of the Translocation Site will be transmittered for follow-up blood sampling at the earliest date approved by USFWS, currently 15 May (USFWS 2010b). All transmittered residents will be located the first day following the transmitter attachment, every other day for two weeks to determine the tortoise's use area (for ease of furture monitoring), and then according to the USFWS (2010b) schedule. If a resident tortoise has clinical disease signs or is seropositive following lab testing, the relocation site that is within 1.5 km or the Translocation Site that is within 6.5 km will be shifted to be outside of those respective

distances. If this cannot be accommodated, further coordination with the agencies will be needed.

4.2.5 Post-release Tortoise Monitoring

All relocated or translocated tortoises will receive immediate post-release visual monitoring as described for Project Area Perimeter Fencing in Section 4.1.5, Post-Release Tortoise Monitoring, above. Additionally, each will be located via telemetry for the next two days during tortoise activity temperatures to ensure that no tortoise is fence-walking or otherwise compromised. All tortoises in quarantine pens will be monitored according to the approved husbandry plan. A minimum monitoring effort will include checking twice daily for the first two weeks, or until fence-walking (should it occur) ceases, whichever is longest. Following this, all tortoises sequestered in pens will be checked daily via telemetry until serology results are returned and tortoises can either be released or transferred to an approved facility. All pen fences will be monitored daily to ensure that they are intact.

All relocated or translocated tortoises will will become part of the five-year monitoring study, as described for Project Area Perimeter Fencing in Section 4.1.5, Post-Release Tortoise Monitoring, above.

4.2.6 Nest Relocation

Nest relocation and monitoring during Project Area clearance will follow the same procedures as outlined above for Project Area Perimeter Fencing in Section 4.1.6, Nest Relocation.

4.3 SCE Fiberoptics Construction, Construction Outside the Project Area, and Harper Lake Road

SCE's upgrades to their existing transmission line to accommodate telecommunications will be subject to all tortoise protection measures, including but not limited to pre-construction surveys, construction monitoring, and relocation, that are identical to those for construction of the perimeter fence in Section 4.1, Project Area Perimeter Fencing and Temporary Fencing, above, with the exception that no tortoises would be transmittered or included in a long-term monitoring program.

Although not anticipated, any other Project-related construction activities that occur in unfenced, native habitat will adhere to the same tortoise protection measures described for SCE telecommunications upgrades.Harper Lake Road will be the main access to the Project during both construction and operation. Tortoise exclusion fencing was previously installed on sections of this road, but it is incomplete. According to BIO-7 (CEC 2010), during construction a BM will drive this road at least every three hours during the desert tortoise activity period (approximately 1 April to 1 November). Outside of the active period, a BM will monitor the road in advance of peak morning and evening traffic. If possible, tortoises will be allowed to move off the road of their own accord;

follow-up monitoring will ensure that the tortoise will not re-enter the road. For tortoises that must be moved to protect them, they will be handled in accordance with the measures provided in Section 3.0 Procedures Applicable to All Relocations/Translocations, above. All tortoises will be placed in the deep shade of a large shrub with immediate follow-up monitoring as described for tortoises moved during Project Area fence construction (Section 4.1, Project Area Perimeter Fencing and Temporary Fencing, above).

4.4 Operations Phase

Tortoises observed during maintenance activities outside the Project Area fence or along the main access road by personnel leaving or entering the Project Site will not be disturbed or handled and will be allowed to move away of their own accord. Any maintenance or emergency/unexpected repairs outside the fence that require surface disturbance or heavy equipment will require the same protection measures described for Project Area fence construction in Section 4.1, Project Area Fencing and Temporary Fencing, above.

Because it is anticipated that the Project Area will be entirely devoid of vegetation following surface grading, (except for small, landscaped areas at the offices) there will be no areas where a tortoise could reside onsite. Therefore, any tortoise found during Project operations likely will have entered the Project Area through a gate or breach in the fence. It is likely, although not impossible, that any tortoise found during Project operations would not yet have constructed a burrow and would have entered the site only recently. Any such tortoise will be relocated, under supervision of the AB, to the nearest suitable, safe habitat outside the fence onto Project or BLM land adjacent to the Project. Because any tortoise found inside the Project Area is likely to be a transient, it is anticipated that the tortoise would seek a familiar burrow when released outside the Project Area. All tortoises will be placed in the deep shade of a large shrub and monitored as described for tortoises moved during Project Area fence construction (Section 4.1, Project Area Perimeter Fencing and Temporary Fencing, above). USFWS, CDFG, BLM, CEC, and DOE will be contacted and informed of the disposition when any desert tortoise is located within the solar field during operations.

In the event that surface temperatures are in excess of USFWS translocation temperatures, the tortoise will be secured in an individual, sterilized box and placed in a quiet, climate-controlled environment (e.g., the onsite Project office). Under supervision of the AB, the tortoise will be released in the late afternoon/early evening of the same day, when ambient temperatures subside. Juvenile tortoises will be released in the early morning to minimize depredation. All boxed tortoises or tortoises affixed with transmitters will be monitored periodically during the day and following release, to ensure their safety, according to methods described for perimeter fencing in Section 4.1.5 Post-Release Tortoise Monitoring, above.

It would be highly unlikely for a tortoise to be discovered wintered in a burrow on the site. However, if such an inactive tortoise were found, it would be handled and removed

from the site as specified for wintering tortoises in Section 4.1, Project Area Perimeter Fencing and Temporary Fencing, above.

4.5 Decommissioning and Reclamation Phase

During the Project decommissioning and reclamation phase, activities will take place both inside fenced areas and in unfenced native habitat. All techniques provided above for tortoise relocation and translocation during perimeter fence construction will apply to decommissioning activities outside fenced areas. Newer information will be incorporated, as appropriate, to optimize tortoise relocation.

4.6 Injured or Dead Tortoises

During construction or operations, any tortoise injured or killed will be reported by phone to USFWS, CDFG, BLM, DOE and CEC no later than noon on the first business day following the discovery of the injured/killed tortoise; a follow-up written report will be e-mailed or faxed within 48 hours. Prior to initiation of relocation/translocation, the DB will contact CDFG for the name of an approved veterinarian or wildlife rehabilitation clinic (per BIO-7 [CEC 2010]). If a tortoise is injured, the tortoise will be taken immediately to one of these facilities at the expense of the Project owner. If a tortoise is killed, it will be salvaged for necropsy.

5.0 Reporting

BIO-11 of the final CEC license (CEC 2010) requires that the Designated Biologist provide a report to the CEC within 30 days of completing Project Area clearance. This report will document how each of the desert tortoise mitigation measures in this Plan have been satisfied. At a minimum, the report will also document survey results, the capture and release locations of all desert tortoises found, immediate post-release monitoring, individual tortoise data, and other relevant data. These reports will be submitted to USFWS, CDFG, BLM[6] and DOE; the AB in charge of relocation/translocation will approve these reports prior to submittal. Monthly and annual reports that document similar data, collected during all monitoring activities, will be prepared as part of the Designated Biologist's duties and submitted to the CEC, USFWS, CDFG, BLM and DOE.

For the post-relocation monitoring study, an annual report will be submitted to the USFWS, CDFG, BLM, CEC and DOE to document activities and analyze preliminary results. A comprehensive report will be conducted at the end of the monitoring program. Interim contact will be made (e.g., via e-mail or letter reports) if important findings could assist the resource agencies in desert tortoise recovery.

---

[6] All reports relative to tortoises on BLM lands will be provided to BLM, as well as USFWS, CDFG, CEC, and DOE.

6.0 Funding

Mojave Solar will provide adequate funds to complete all work as described.

7.0 Literature Cited

Barrett, S.L. 1990. Home range and habitat of the desert tortoise (*Xerobates agassizii*) in the Picacho Mountains of Arizona. Herpetologica 46:202-206.

Blackford, A. USFWS, Ventura Field Office. 21 May 2010. Personal communication to A. Karl

---, W.B. Kristan, III, and A.P. Woodman. 2008. Neither here nor there: current status of Sonoran desert tortoise populations in Arizona. Paper presented at the 2008 Desert Tortoise Council Symposium, Las Vegas, NV.

Brown, M.B. 2010. E-mail on blood sampling for ELISA testing and seasonal effects on immune systems to Kimberleigh Field, USFWS. 6 October 2010.

Burge, B.L. 1977. Movements and behavior of the desert tortoise, *Gopherus agassizi*. M.S. Thesis, Univ. of Nevada, Las Vegas. 225 pp.

California Department of Fish and Game. 2010. Comments from Eric Weiss and Tonya Moore on the Abengoa Draft Translocation Plan. E-mail to Heather Blair, Aspen Environmental.

California Energy Commission. 2010. Commission decision on the Abengoa Mojave Solar Project. Docket No.09-AFC-5. 583 pp.

Desert Tortoise Council, 1994 (rev. 1999). Guidelines for handling desert tortoises during construction projects. E.L. LaRue, Jr. (ed.) Wrightwood, CA.

Duda, J.J., A.J. Krzysik, and J.E. Freilich. 1999. Effects of drought on desert tortoise movement and activity. Jour. Wildlife Mgmt. 63(4):1181-1192.

Encinas, L. 17 November 2010. E-mail to C. Hammel-Smith, A. Karl, and A. Blackford.

Englehard, T. USFWS, Carlsbad Fish and Wildlife Office. 24 September 2010. E-mail to A. Karl.

Hazard, L.C. and D.J. Morafka. 2002. Comparative dispersion of neonate and headstarted juvenile desert tortoises (*Gopherus agassizii*): a preliminary assessment of age effects. Chelonian Conserv. Biol. 4(2):406-409.

Holland, R. F. 1986. Preliminary descriptions of the terrestrial natural communities of California. California Department of Fish and Game, Nongame-Heritage Program. 155 pp.

Karl, A.E. 1989. Investigations of the desert tortoise at the California Department of Health Services' proposed low-level radioactive waste facility site in Ward Valley, California. Unpub. rept. submitted to US Ecology and Ecological Research Services. 116 pp.

---. 1992. Annual report to the U.S. Fish and Wildlife Service for Permit No. PRT-746058. 12 pp.

---. 2004. Drought: acute effects and impacts to recovery of the desert tortoise. Paper presented at the 2004 Desert Tortoise Council Symposium, Las Vegas, NV.

---. 2010a. Mojave Solar Project desert tortoise clearances and relocation/translocation plan. Submitted to Mojave Solar, LLC. CEC Docket No. 09-AFC-5. 29 pp.

---. 2010b. Ridgecrest Solar Power Project. Analysis of population and species impacts to the desert tortoise, due to the siting of this project in its current location. Docketed 29 April 2010. 19 pp.

--- and Resource Design Technology, Inc. 2007 Mesquite Regional Landfill. Initial desert tortoise clearance-October 2005. Submitted to the Los Angeles County Sanitation Districts, Whittier, CA. 28 pp plus attachments.

Marlow, R. W., K. von Seckendorff Hoff, and P. Brussard. 1997. Management of wild tortoise populations is complicated by escape or release of captives. Pp. 479-480 *in* J. van Abbema (ed.), Proceedings: Conservation, Restoration, and Management of Tortoises and Turtles – an International Conference. Joint publ. of the New York Turtle and Tortoise Society and the WCS Turtle Recovery Program.

McLuckie, A.M., M.R.M. Bennion, R.A. Fridell, and R. Radant. Status of the desert tortoise in the Red Cliffs Desert Reserve. Paper presented at the 2006 Desert Tortoise Council Symposium, Las Vegas, NV.

Morafka, D.J., K.H. Berry, and E.K. Spangenberg. 1997. Predator-proof field enclosures for enhancing hatching success and survivorship of juvenile tortoises: a critical evaluation. Pp. 147-165 *in* the New York Turtle and Tortoise Society, Proceedings: Conservation, Restoration, and Management of Tortoises and Turtles – an International Conference.

Mojave Solar, LLC. 2009. Mojave Solar Project Application for Certification. Submitted to the California Energy Commission, Sacramento, CA. August 31, 2009.

Ninyo & Moore, 2006. Ninyo & Moore Geotechnical and Environmental Sciences Consultants (Ninyo & Moore), 2006. Geotechnical Reconnaissance Harper Lake Dairy Park, Lockhart, California. Prepared for Metcalf & Eddy. July 7.

Nussear, K.E. 2004. Mechanistic investigation of the distributional limits of the desert tortoise, Gopherus agassizi. *Ph.D. Diss.* University of Nevada, Reno.

O'Connor, M. P., L. C. Zimmerman, D. E. Ruby, S. J. Bulova, and J. R. Spotila. 1994. Home range size and movements by desert tortoises, *Gopherus agassizii*, in the eastern Mojave Desert. Herp. Monogr. 8:60-71.

Schumacher, I.M., M.B. Brown, E.R. Jacobson, B.R. Collins, and P.A. Klein. Detection of antibodies to a pathogenic Mycoplasma in desert tortoises (*Gopherus agassizii*) with upper respiratory tract disease. J. Clin. Microbiol. 31(6):1454-1460.

TRW Environmental Safety Systems, Inc. 1999a. Movement patterns of desert tortoises at Yucca Mountain. Unpubl. rept. to U.S. Department of Energy, Yucca Mountain Site Characterization Office, North Las Vegas, NV. Document No. B00000000-01717-5705-00049.

---. 1999b. Cover use and movement patterns of hatchling desert tortoises at Yucca Mountain, Nevada. Unpubl. rept. to U.S. Department of Energy, Yucca Mountain Site Characterization Office, North Las Vegas, NV. Document No. B00000000-01717-5705-00073. 11 pp.

United States Department of Energy. 2010. Biological Assessment: Mojave Solar Project. Prepared by AECOM, San Diego, CA, for Mojave Solar, LLC. 110pp.

United States Fish and Wildlife Service. 1992. Field survey protocol for any federal action that may occur within the range of the desert tortoise. Ventura, California Field Office.

---. 2009a. Desert tortoise field manual. Available online at (http://www.fws.gov/ventura/speciesinfo/protocols_guidelines/docs/dt/dt_fieldmanual)

---. 2009b. Range-wide monitoring of the Mojave Population of the desert tortoise: 2007 annual report. Desert Tortoise Recovery Office, Reno, NV.

---. 2010a. Comments on the draft Mojave Solar Project Desert Tortoise Clearance and Relocation/Translocation Plan from Ashleigh Blackford, USFWS, Ventura Field Office. 26 April 2010.

---. 2010b. Translocation of desert tortoises (Mojave Population) from project sites: plan development guidance. August 2010. Unpub. document. 11 pp.

University of Florida, Department of Pathobiology. No date. Serologic test for tortoise exposure to *Mycoplasma.* Unpub. doc. 5 pp.

Zimmerman, L.C., M.P. O'Connor, S.J. Bulova, J.R. Spotila, S. J. Kemp, and C.J. Salice. 1994. Thermal ecology of desert tortoises in the eastern Mojave Desert: seasonal patterns of operative and body temperatures, and microhabitat utilization. Herp. Monogr. 8:45-59.

APPENDIX 1. Sample Desert Tortoise Data Form

LIVE TORTOISE DATA FORM

HYUNDAI MOTOR AMERICA TEST TRACK PROJECT
CALIFORNIA CITY, KERN COUNTY, CALIFORNIA

OBSERVER Eli Berasteiu
PROCESSOR Karl
DATE 10-18-03
TIME (pst) FOUND ~1000 on 10/17 0903
START PROC. 0837 found / 1003 retr. from burrow
FINISH PROC. 1119 1019
T_a 22.7°C T_{ps} 23.9°C WIND 0-1 mph T_{scan} 22.9
PPT/CC 90% cirrostatus

BEHAVIOR (check one, elaborate as necessary):
- IN BURROW, ~~FACE IN~~ @ end (~167cm)
- IN BURROW, FACE OUT
- ENTERING BURROW
- RUNWAY, EXITING
- BASKING
- TRAVELLING when found on 10/17
- UNDER SHRUB IN SHADE
- UNDER SHRUB, FACE INTO STEM
- OTHER T-P out

DISEASE INDICATIONS (elaborate as necessary; grade severity of *abnormal conditions*: (1) mild; (2) moderate; (3) severe)

BEAK/NARES (answer all):
- GREEN NO DRY ✓ OCCLUDED NO
- NASAL EXUDATE NO
  - SEROUS
  - NON-SEROUS(severity, color, quality)
- CAKED DIRT ON BEAK/FORELIMBS NO
- EXUDATE ON FORELIMBS NO

BREATHING (ck all that apply; describe/grade abn. cond):
- CLEAR ✓ WHISTLING
- OBSTRUCTED

EYES (ck all that apply; describe/grade abn. cond.):
- CLEAR, BRIGHT ✓ MOIST LIDS NO
- SWOLLEN OR SUNKEN NO
- DISCHARGE NO
- CONJUNCTIVITIS NO

CHIN GLANDS DRAINING? NO

ORAL CAVITY (ck all that apply; describe/grade abn. cond):
- COLOR Pale pink
- LESIONS NO
- ODOR NO

ATTITUDE (check all that apply)
- STRONG ✓ ACTIVE
- QUIET, WITHDRAWN ✓
- RELAXED LETHARGIC, WEAK

SHELL (ck all that apply; describe/grade abn. cond.):
- NORMAL ABNORMALLY SCALEY El. scaley along bridge to ant. m1, 2, nuchal
- LESIONS TO BONE/~~BLOODY~~ Loss of keratin in small "divots" - may be lesions. Bone shows along humeral + pectoral seams +

EXTERNAL PARASITES (answer all that apply)
- NONE ✓ TYPE #
- LOCATION

TORTOISE # H-08
TRANSMITTER: TYPE HOL # 87159
DATA LOGGER # NONE

CAPTURE LOCATION:
- GENERAL LOCATION NE ¼ of S16
- UTM: E 0404614 N 3878932

RELEASE LOCATION:
- GENERAL LOCATION
- UTM: E N

GENDER ♀
If unknown, check the following indicators and elaborate:
- TAIL LENGTH PYGAL
- ABDOMINALS
- ANALS WIDTH OF FOREFOOT
- CHIN GLANDS

MASS (g): INITIAL 3790 FINAL (w/transmitter) 3815
VOID: URINE? SCAT VISCOSITY
- COLOR PPT
- TOTAL MASS OF EXCRETA (g)

MEASUREMENTS (mm):
- MCL 280 PLN 247.5 HT 110
- WIDTH M7/8 (seam) 214 GW 222 @ PM 6
- WIDTH M6 (mid) if GW is not M5, M6, or M7 X

SHELL WEAR CLASS 6
SUPER- or SUB-NUMERY MARGINALS? NO, but xtra vei
NUMBER OF GROWTH RINGS Can't count
GENERAL TORTOISE SHAPE (check one): ✓

PHOTO: ROLL 1 FRAMES
17 - Plastron
18 - Ant. plastron
19 - foo
20 - C
21 - C w/transmitter
22 - "
23 - "

DIAGRAM TRAUMA AND ANOMALIES:

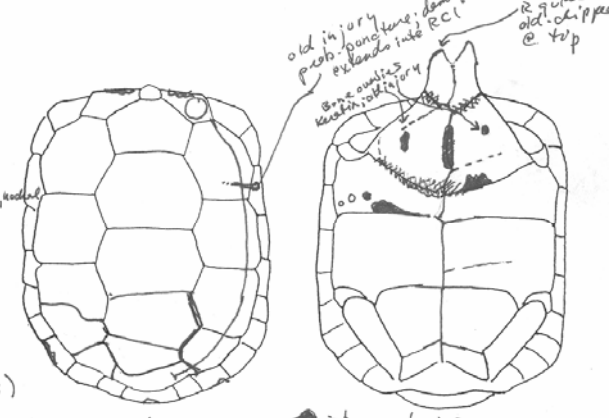

these seams are deep; appear to have some keratin loss. Ant. marg 1+2+ nuchal also seem abnormally scaley (1-2)

Both front legs medial surfaces have experienced some loss of scales, esp. L. Prob. chewing.

Scales missing ~⅓ plantar surface L hind foot

FIGURES

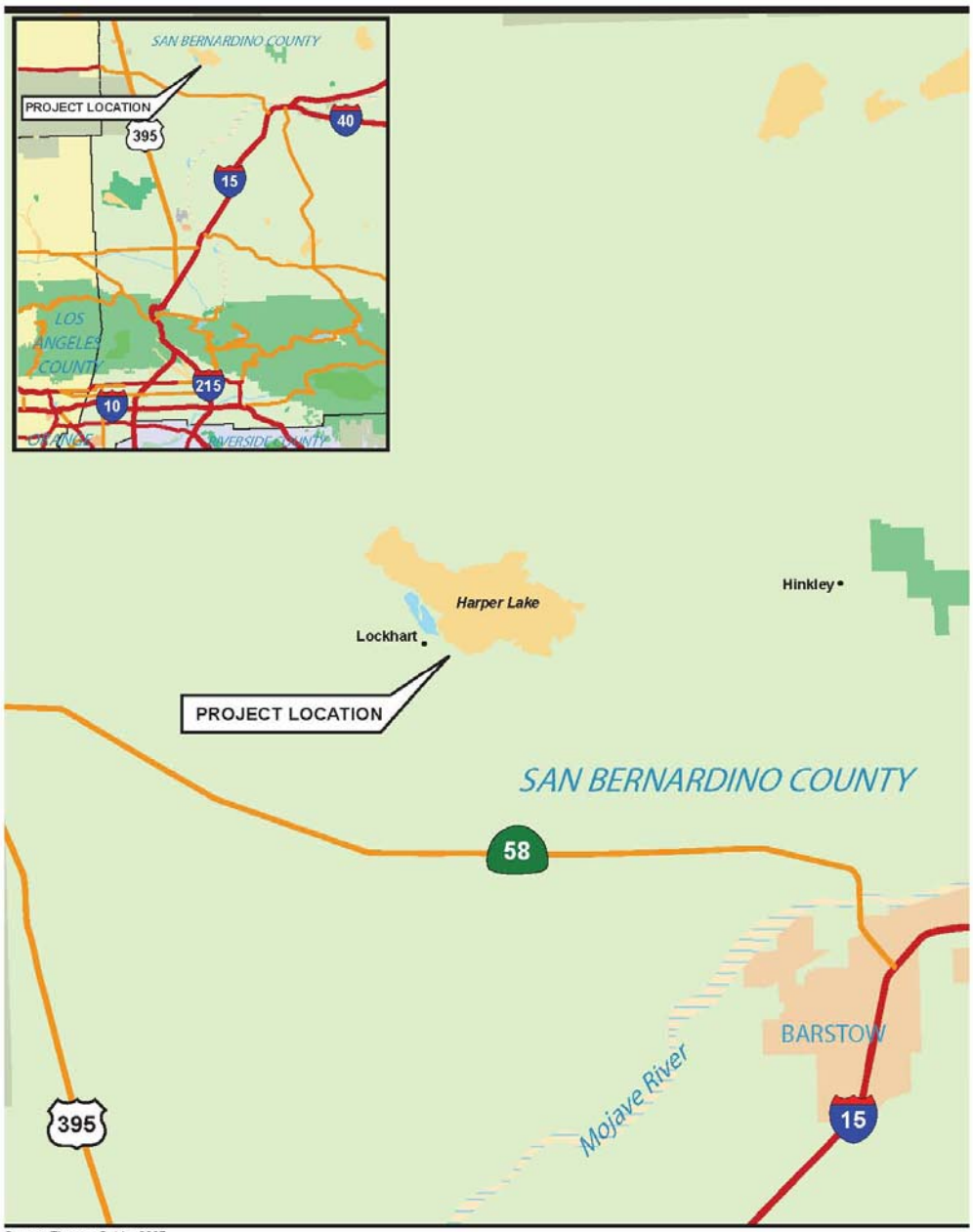

Source: Thomas Guide, 2007

4.5 2.25 0 4.5 Miles

Approximate Scale: 1 inch = 4.5 miles

Figure 1
Location of the Mojave Solar Project
Near Hinkley, San Bernardino County, California

Final MSP Desert Tortoise Translocation Plan /January 2011
P:\2008\08080191 Harper Lake Abengoa AFC\4.0 Documents_References\4.7 Draft Documents\Figures\2009 Botanical Survey Ltr Rpt corona-bennettj 7/23/09

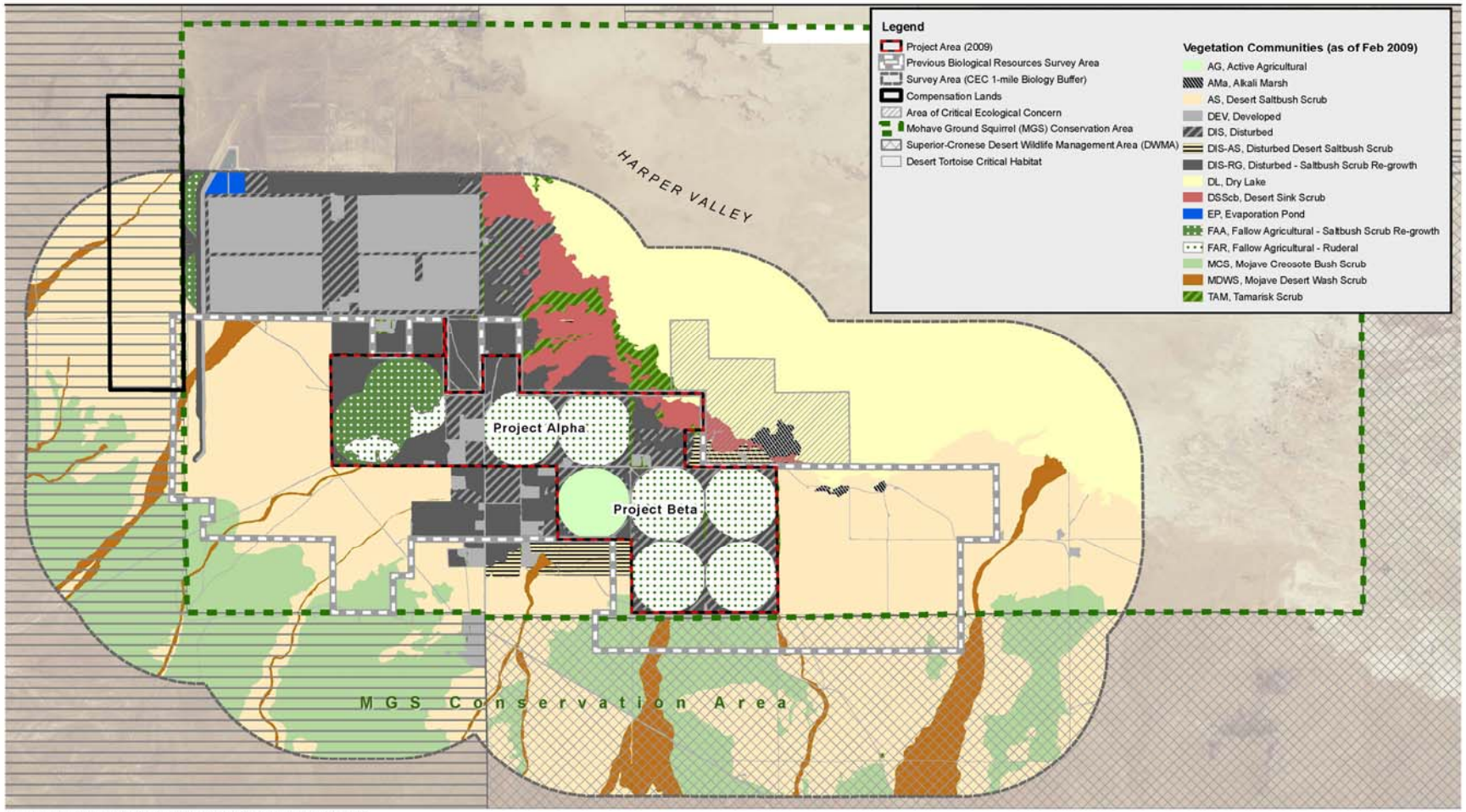

Source: NAIP 2005; USFWS 2006; BLM 2009; Mojave Solar, LLC 2009; San Bernardino County 2009

3,500 1,750 0 3,500 Feet

Scale: 1 = 42,000; 1 inch = 3,500 feet

Figure 2
Mojave Solar Project Vegetation Cover and Special Management Areas

Final MSP Desert Tortoise Translocation Plan /January 2011

Path: P:\2008\08090191 Harper Lake Abengoa AFC\6.0 GIS\6.2 Project Directory\6.2.5 Layout\Compliance\DETO\veg_cvr.mxd, 01/17/11, BogorkoM

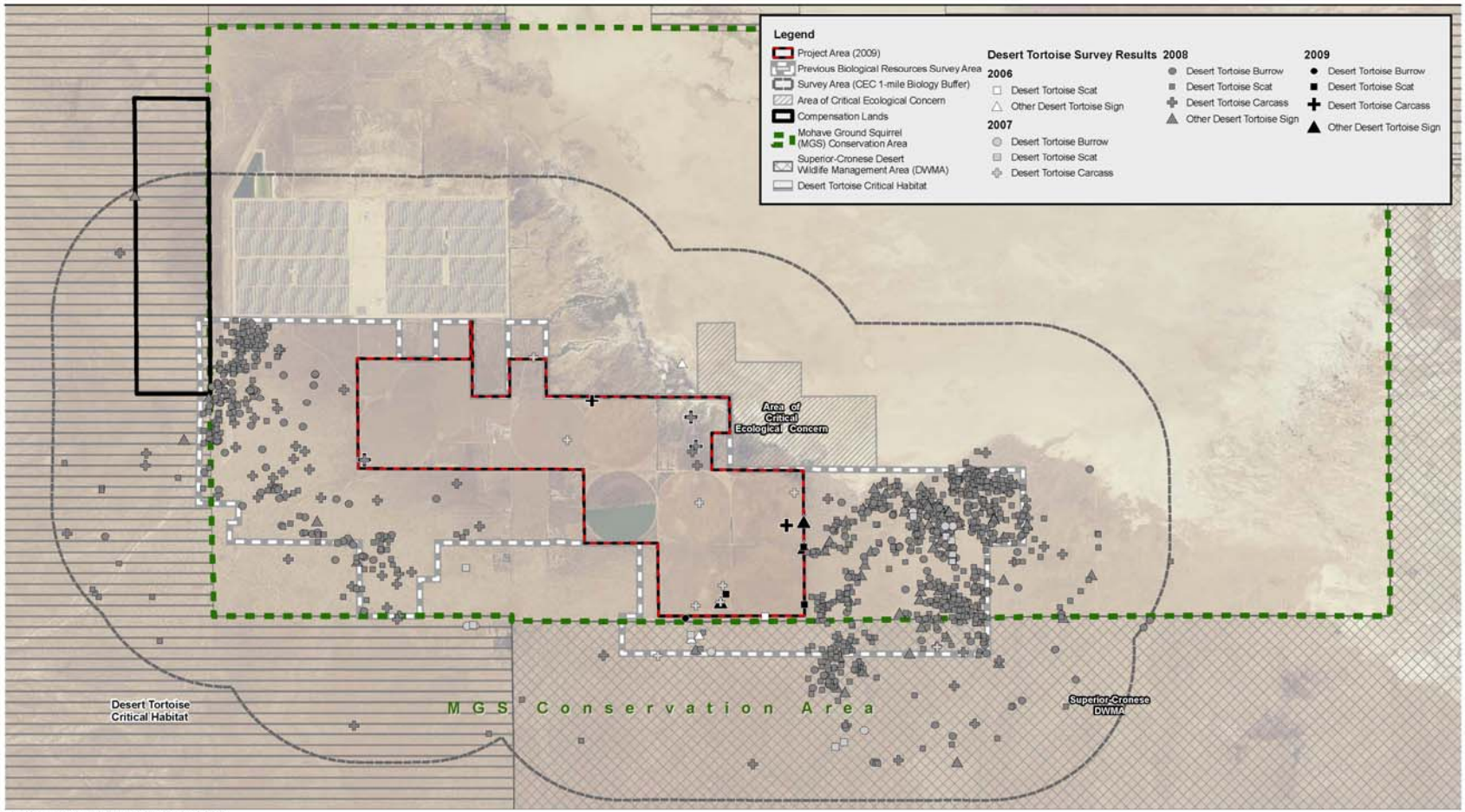

Source: NAIP 2005; USFWS 2006; Mojave Solar, LLC 2009

3,500 1,750 0 3,500 Feet

Scale: 1 = 42,000; 1 inch = 3,500 feet

Figure 3
Desert Tortoise Sign

Final MSP Desert Tortoise Translocation Plan /January 2011

Path: P:\2005\0505191 Harper Lake Abengoa AFC\6.0 GIS\6.2 Project Directory\6.2.5 Layout\Compliance\DETO\DETOSign.mxd, 01/17/11, BogonkoM

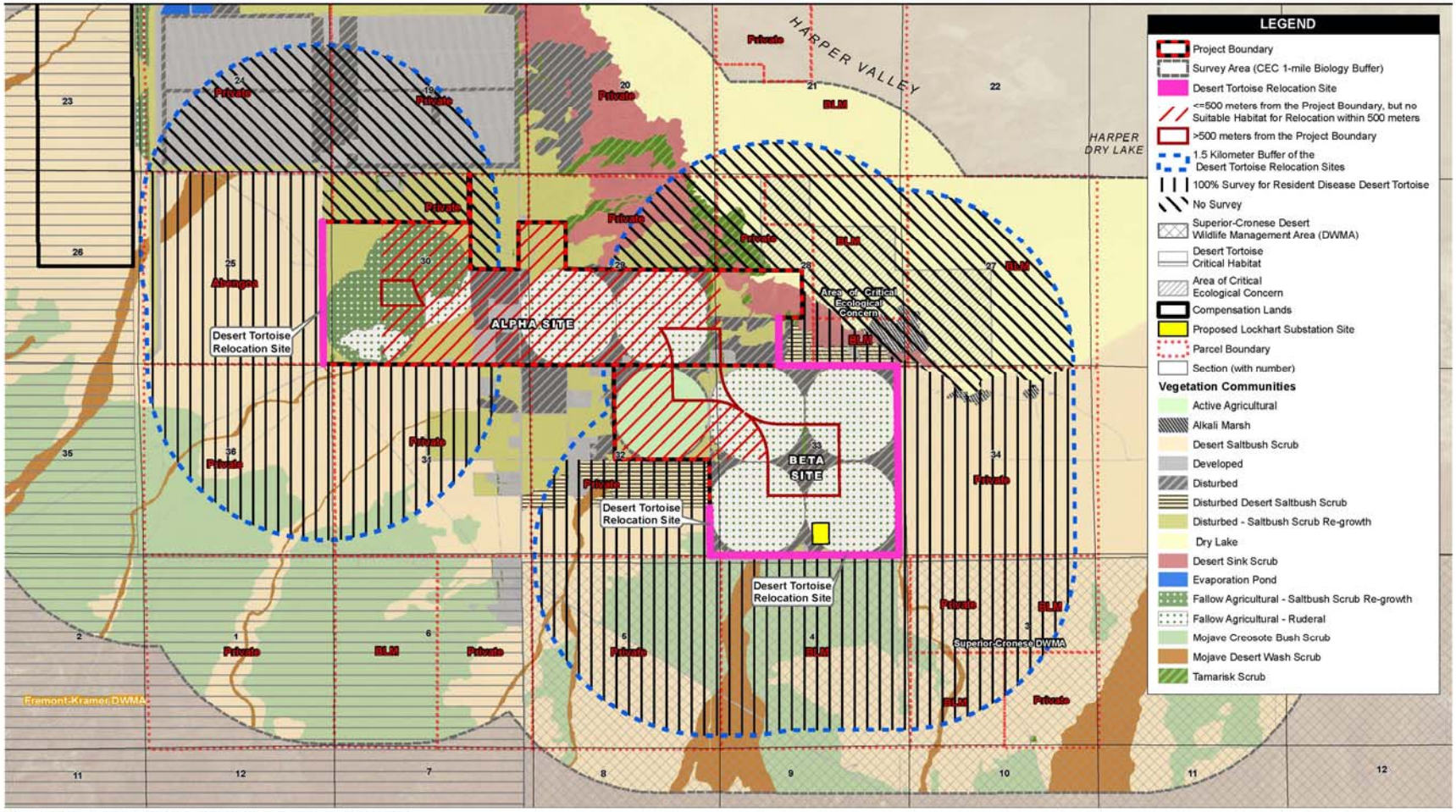

Source: NAIP 2005; USFWS 2006; BLM 2009; Mojave Solar, LLC 2009; San Bernardino County 2009; BLM 2010

2,700 1,350 0 2,700 Feet

Scale: 1 = 32,400; 1 inch = 2,700 feet

Figure 4
Relocation Sites and Surveys for Diseased Resident Tortoises

Final MSP Desert Tortoise Translocation Plan /January 2011

Path: P:\2008\08050191 Harper Lake Abengoa AFC\6.0 GIS\6.2 Project Directory\6.2.5 Layout\Compliance\DETO\Relocation Sites.mxd, 01/17/11, Bogonkaf

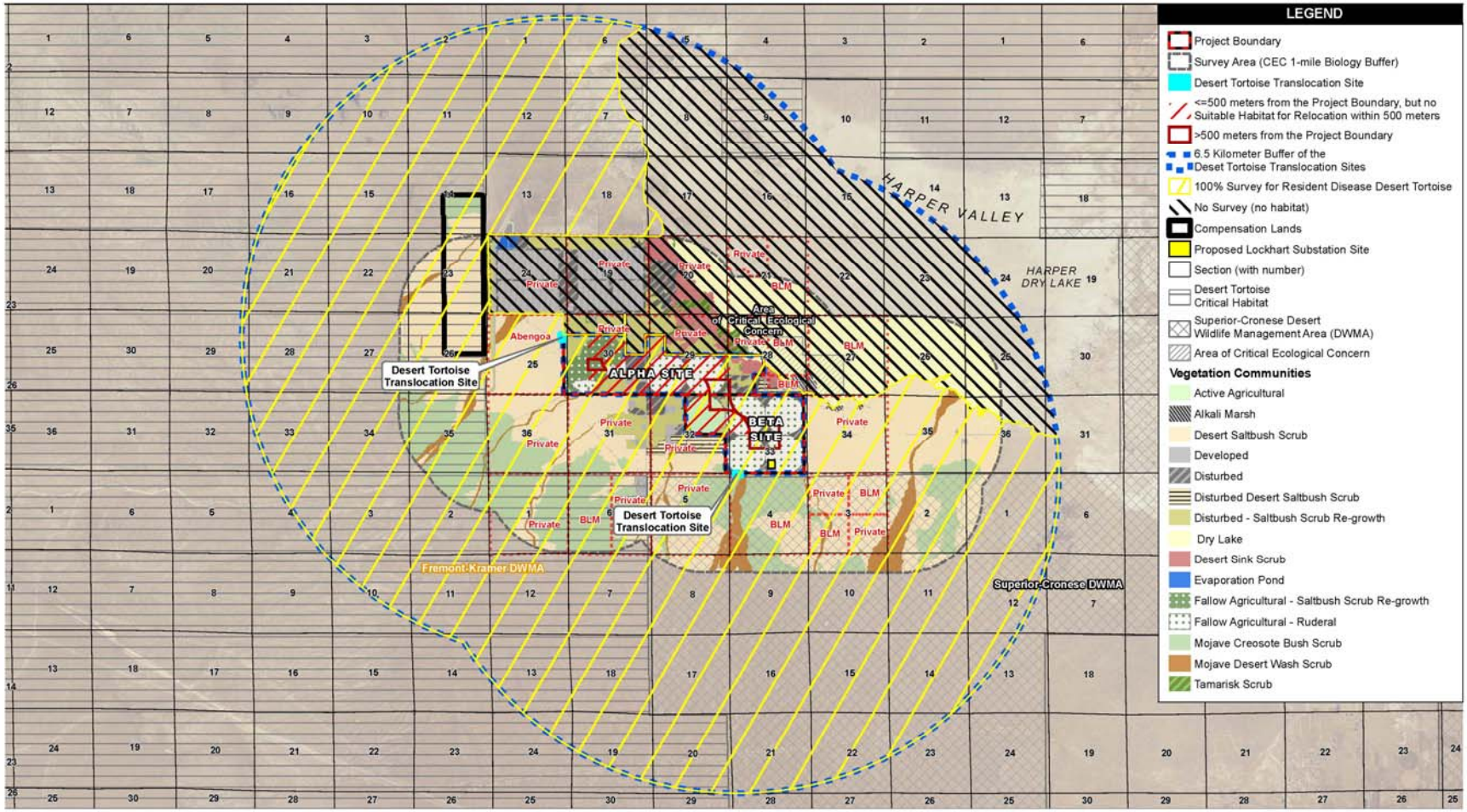

Source: NAIP 2005; USFWS 2006; BLM 2009; Mojave Solar, LLC 2009; San Bernardino County 2009; BLM 2010

6,500 3,250 0 6,500 Feet

Scale: 1 = 78,000; 1 inch = 6,500 feet

Figure 5
Translocation Sites and Surveys for Diseased Resident Tortoises

Final MSP Desert Tortoise Translocation Plan /January 2011

Path: P:\2008\08080191 Harper Lake Abengoa AFC\6.0 GIS\6.2 Project Directory\6.2.5 Layout\Compliance\DETO\Translocation Sites_batch.mxd, 01/18/11, BogonkoM

APPENDIX M-2

COMMON RAVEN MONITORING, MANAGEMENT, AND CONTROL PLAN

Common Raven Monitoring, Management and Control Plan

Mojave Solar Project

Raven Control Plan

Prepared on behalf of:

Mojave Solar, LLC

Prepared by:

AECOM
1420 Kettner Boulevard, Suite 500
San Diego, California 92101
(619) 233-1454

December 2010

Table of Contents

1.0 INTRODUCTION 1
1.1 Purpose and Objectives 1
1.2 Project Background 2
1.3 Conditions of Concern – Raven Subsidies or Attractants 3
1.4 Roles and Responsibilities 5

2.0 REGIONWIDE RAVEN MANAGEMENT AND MONITORING PROGRAM 5

3.0 PROJECT DESIGN FEATURES, PROJECT-SPECIFIC CONTROL MEASURES, AND IMPLEMENTATION OF PROJECT DESIGN FEATURES 6
3.1 Construction 6
3.1.1 Evaporation Ponds 6
3.1.2 Raven Perching, Roosting, and Nesting Sites 6
3.1.3 Ponding Water 7
3.1.4 Raven Food Sources from Soil Disturbance and Roadkill 7
3.1.5 Human Food and Waste Management 7
3.2 Operations 7
3.2.1 Evaporation Ponds 8
3.2.2 Raven Perching, Roosting, and Nesting Sites 8
3.2.3 Ponding Water 8
3.2.4 Raven Food Sources from Soil Disturbance and Roadkill 8
3.2.5 Human Food and Waste Management 9

4.0 RAVEN MONITORING STRATEGIES 9
4.1 Construction Phase 9
4.2 Operation Phase 9
4.2.1 Ongoing Monthly Raven Monitoring 10
4.2.2 Breeding Season Raven Surveys 11
4.3 Nest Removal 11
4.4 Decommissioning and Restoration Phase 12

5.0 ADAPTIVE MANAGEMENT 12
5.1 Definition 12
5.2 Adaptive Management Triggers 12
5.3 Adaptive Management Measures 13
5.3.1 Control Practices 13

6.0 REPORTING 14

7.0 REFERENCES 15

ATTACHMENT A. Figures 1–4

This page intentionally left blank.

1.0 INTRODUCTION

In response to the Final Decision issued by the California Energy Commission (CEC) on September 15, 2010, for the Mojave Solar Project (MSP or Project) this Common Raven Monitoring, Management, and Control Plan (Raven Control Plan or Plan) has been prepared for approval by CEC, the U.S. Fish and Wildlife Service (USFWS), and California Department of Fish and Game (CDFG) as specified in the Condition of Certification (COC) Bio 18. This Plan has been developed to expand on the components already addressed in the Application for Certification (AFC) in Avoidance and Minimization Measure DT-18 (Abengoa 2009: 5.3–45). The purpose of this Plan is to address concerns related to raven (*Corvus corax*) predation on hatchling and juvenile desert tortoise (*Gopherus agassizii*; DT) resulting from the proposed MSP. The Plan will also address similar concerns related to Mohave ground squirrel (*Spermophilus mohavensis*; MGS) depredation from ravens. The following section will provide a discussion of the Project background, the Plan's purpose and objectives, and the conditions of concern associated with the proposed MSP.

1.1 Purpose and Objectives

This section introduces the Project background, purpose, objectives, and conditions of concern related to raven monitoring and control in the vicinity of the MSP.

The establishment of an effective management plan and set of control measures is intended to ensure that the proposed MSP does not create new subsidies such as new sources of food and water, which would increase the presence, survival, or reproductive success of ravens that might be attracted to the Project area. Common ravens are known to prey on hatchling and juvenile DT, which is listed as threatened under the Federal Endangered Species Act (FESA) and California Endangered Species Act (CESA). The purpose of the Raven Control Plan is to establish management strategies and Project-specific control measures to avoid, minimize, and mitigate potential Project-related raven depredation of DT within the Project area. The specific objectives of the Raven Control Plan are as follows:

1. Identify Project activities or features that have the potential to attract ravens to the Project area (conditions of concern) and identify ways to eliminate or reduce raven attractants.
2. Discuss how the Project will implement Project design features (PDFs) and other control measures to manage the specific conditions of concern identified for the MSP.
3. Document the successes and failures of PDFs and other measures set forth in this Plan.
4. Establish criteria that will trigger modifications to PDFs and other control measures through adaptive management principles.
5. Define additional control measures and how they would be implemented if the monitoring results indicate that additional controls are necessary.

To ensure that the purpose and objectives of this Raven Control Plan are being achieved, management controls and monitoring practices will be implemented to regulate and track raven activity within the Project area. The qualitative data derived from this effort will be used to evaluate the successes and failures of the PDFs, as well as the other raven management control measures implemented for the MSP.

The Raven Control Plan designed for the MSP site will work in concert with the USFWS rangewide raven monitoring and control program to help monitor and control raven populations within the MSP site and adjoining regions.

1.2 Project Background

The Abengoa Mojave Solar Project (AMSP or Project) is a solar electric generating facility to be located on approximately 1,765 acres in unincorporated San Bernardino County, California, approximately 26 miles northwest of Barstow. Mojave Solar LLC, a subsidiary of Abengoa Solar Inc., (Abengoa or ASI) will own and operate the project. ASI filed an Application for Certification (AFC) with the California Energy Commission (CEC) for the Project on August 10, 2009. The CEC issued a Final Permit Decision adopting the Presiding Member's Proposed Decision (PMPD) to recommend licensing the project on September 8, 2010.

The Project site is accessed by Harper Lake Road, which is located approximately 20 miles west of Barstow along the Highway 58 corridor. The Project site is approximately six miles north of where Harper Lake Road intersects with Highway 58. See the regional map (Figure 1) and a vicinity map (Figure 2).

The project site is comprised of private property historically used as the Lockhart Ranch complex. The site once served as an agricultural and cattle center and included farming activities that used flood and pivot system irrigation.

The Project will implement well-established parabolic trough technology to heat a heat transfer fluid (HTF). The heated HTF will generate steam in solar steam generators (SSGs), and the steam will then be expanded through a steam turbine generator (STG) to produce electrical power.

The Project will have a combined nominal electrical output of 250 megawatts (MW) from twin, independently-operable solar fields (Alpha and Beta), each feeding a 125-MW power island. The Alpha site is approximately 950 acres in size, and the Beta site is approximately 815 acres. Approximately 70 percent (%) of the total project area will consist of solar fields. Approximately 3% of the site will be occupied by the power blocks, with the remaining 27% consisting of drainage improvements, evaporation ponds, a substation, and other common elements. The electrical output from the Alpha and Beta sites will join at an on-site transmission line interconnection substation to form one full-output transmission interconnection. The power generated by the project will be transmitted to Southern California Edison's (SCE's) transmission grid through SCE's existing 230-kilovolt (kV) Kramer-Cool Water #1 transmission line. The entire site perimeter will be fenced. The layout of the Alpha and Beta facilities, and the associated drainage channels, are shown in Figure 3.

The sun will provide 100% of the power supplied to the Project through solar-thermal collectors; no supplementary fossil-based energy source (e.g., natural gas) is proposed for electrical power production. However, each power island will have a natural-gas-fired auxiliary boiler to provide equipment freeze protection and HTF freeze protection. The auxiliary boiler will supply steam to HTF heat exchangers as needed during offline hours to keep the HTF in a liquid state when ambient temperatures fall below its freezing point of 54 degrees Fahrenheit (°F). Each power island will also have a diesel engine-driven firewater pump for fire protection and a diesel engine-driven backup generator for power plant essentials.

The Project will use wet cooling towers for power plant cooling, and the project owner owns adjudicated water rights for this purpose. Water for cooling tower makeup, process water makeup, and other industrial uses such as Solar Collector Array (SCA) washing will be supplied from onsite groundwater wells drawing from these water rights and will also be used to supply potable water. A packaged water treatment system will be used to treat the water to meet potable standards since the source is brackish.

A sanitary septic system and onsite leach field will be used to dispose of sanitary wastewater at each power island. Project cooling water blowdown will be piped to lined, onsite evaporation ponds for each plant area. The ponds will be sized to retain all solids generated during the life of the plant. However, if required for maintenance, dewatered residues from the ponds could be sent to an appropriate offsite landfill as non-hazardous waste.

Natural gas for the Project's ancillary purposes, such as the auxiliary boilers, space heating, and the like will be supplied by a Southwest Gas Corporation (SGC) owned pipeline that runs to the Project boundary near the Alpha power island. No offsite pipeline facilities are proposed as a part of this Project.

Construction of the AMS facility, from site preparation and grading to commercial operation, is expected to take place approximately 2-1/2 years. Commercial service is expected by winter of 2013. The AMS project has an expected operating life of between 30 years to 40 years. Whenever the facility is closed, whether temporarily or permanently, the closure procedures outlined in the CEC Decision will ensure compliance with applicable laws, ordinances, regulations, and standards (LORS).

Although certain features of the proposed Project (i.e., evaporation ponds, support structures, substations) have the potential to offer human-provided subsidies of food, water, and nest sites that may increase the attraction and presence of common ravens within the Project area, these features currently exist on the adjacent SEGS VIII and IX facilities. As described in the AFC (Abengoa 2009) prepared for the Project, DT have been observed within and near the Project area; therefore, the proposed Project has the potential to indirectly impact DT populations within the Project area. This Raven Control Plan describes effective management mechanisms to control the presence of ravens within the Project area.

1.3 Conditions of Concern – Raven Subsidies or Attractants

Project-specific activities and/or features that attract or subsidize ravens are called "conditions of concern." These conditions have the potential to increase raven presence and/or use of resources within the Project area. Construction and operation of the MSP would introduce raven subsidies or attractants similar to the existing SEGS facility immediately to the northwest of the MSP. Approximately 75% of the existing vegetation within the current Project area is either fallow or active agricultural habitat. These habitat types currently provide subsidies that exist due to agriculture (e.g., fresh water, rodents, and rabbits killed during harvesting). These habitats will be removed by the implementation of the Project. With appropriate measures to reduce the attractiveness of any of the conditions of concern below, the Project will be able to limit the attractiveness of the site to ravens after Project implementation. The following five conditions of concern are associated with the MSP:

1. Availability of water from evaporation ponds;
2. Potential creation of new perching/roosting/nesting sites for ravens;
3. Temporary water ponding potential from dust suppression associated with construction, operation, and maintenance;
4. Raven food sources from soil disturbance (rodents, insects, etc.) and roadkill associated with construction activity; and
5. Human food and waste management.

Each of these conditions of concern is defined in more detail below to ensure that appropriate PDFs and control measures are established and implemented for the MSP.

Evaporation Ponds

The proposed Project includes four evaporation ponds, two for each plant unit's power block, that will collect blowdown water from the cooling towers. In addition to these evaporation ponds, water is also periodically available within marsh habitat within Harper Dry Lake. While the groundwater that historically supported the marsh habitat within the lake has largely been depleted by agricultural activities, there is a small amount of marshland in the southwest corner of the lake that is largely supported by runoff from farms. A reduction in agricultural activities within the area has reduced the amount of water to the lake. The Bureau of Land Management (BLM) set up an agreement for the existing SEGS VIII and IX facilities that provides pumped water to the lake to maintain marshland habitat. Water is also currently available to ravens from existing irrigation in the active agricultural fields in the Project area. While water is currently available near the site, additional water sources are likely to benefit the regional raven population.

Raven Perching, Roosting, and Nesting Sites

Ravens often nest and perch on power towers, telephone poles, buildings, billboards, fences, abandoned vehicles, freeway or railroad overpasses, and light posts, and large communal roosts are known to form on transmission towers (Boarman 1993). Therefore, Project components such as tower structures, fencing, transmission poles and lines, and support structures will introduce new elevated perching sites.

Ponding Water

As discussed above, water is a critical resource for ravens in the desert. However, water is currently available in the immediate Project area (see above). Dust-suppression activities occurring during the construction phase of the MSP have the potential to create sources of free or standing water within the Project area. Ponding water may occur as a result of water being applied to newly graded areas, construction rights-of-way, dirt roads, trenches, spoil piles, and other areas of ground disturbances to reduce dust emissions and erosion of topsoil. During operation of the MSP, deionized water will be used to wash mirrors; however, the amount of water used will be minimal and is not anticipated to result in ponding water on site. During rain events, water will collect in the drainage channel on site, though is expected to flow into Harper Lake due to the slope of the channel. Landscaping, if any, will incorporate xeriscaping techniques to minimize the use of irrigation that might provide temporarily ponded water.

Raven Food Sources from Soil Disturbance

The operation of heavy equipment during the construction, decommissioning, and restoration phases of the MSP will cause soil disturbance within the Project area. This soil disturbance could potentially "unearth" and expose natural food sources such as rodents and insects. Since ravens scavenge roadkill, they may be drawn to the soil disturbance areas to prey on unearthed, injured, and dead animals.

Human Food and Waste Management

Ravens scavenge refuse at landfills for food and obtain food subsidies at sewage ponds, open dumpsters, agricultural fields, feedlots, parks, and picnic areas (Boarman 2003). In addition, dumpsters with food waste can attract ravens and small mammals (e.g., rodents) that may

become an additional food source for ravens. Implementation of the MSP will result in increased food and waste generation in the Project area, so proper waste management will be conducted to prevent the creation of subsidies that could attract ravens to the site.

Landscaping

Any landscaping could provide food (insects and rodents), water (irrigation for landscaping), and perching. Landscaping plans, therefore, would incorporate xeriscaping techniques to avoid the use of irrigation and would avoid using trees that would provide roosting and nesting opportunities.

1.4 Roles and Responsibilities

Prior to the initiation of construction activities, to ensure that all conditions of this Raven Control Plan are being met, Mojave Solar will assign a Designated Biologist (DB) to the MSP. This section describes the roles and responsibilities of the DB, as well as the required qualifications for the position.

Designated Biologist

Prior to the initiation of construction activities, Mojave Solar will be required to designate a DB to the Project. (The DB will be the same as the Project Authorized Biologist [AB] discussed in the AFC.) Mojave Solar will submit the resume of the proposed DB, with at least three references and contact information, to the CEC Compliance Project Manager (CPM) for approval in consultation with CDFG and USFWS.

The DB will have the following background and training:

- Bachelor's degree in biological sciences, zoology, botany, ecology, or a closely related field, and 3 years of experience in field biology or current certification of a nationally recognized biological society, such as The Ecological Society of America or The Wildlife Society.
- At least 1 year of field experience with biological resources found in or near the Project area.
- Be aware of the latest information on the USFWS protocols and guidelines for DT.
- Have a thorough and current knowledge of DT behavior, natural history, ecology, and physiology, and demonstrate substantial field experience.

Mojave Solar will ensure that the DB performs the activities specified in the Plan. In addition, Mojave Solar will also designate an alternate biologist with the same qualifications as the DB, outlined above. The CPM, in consultation with CDFG and USFWS, could also appoint a DB without the above-mentioned qualifications if the candidate is determined to be otherwise qualified with the appropriate training and background to effectively implement the Raven Control Plan.

2.0 REGIONWIDE RAVEN MANAGEMENT AND MONITORING PROGRAM

MSP will contribute to the USFWS regional raven management and monitoring program to offset the MSP's cumulative effects on DT due to raven predation. Mojave Solar will contribute approximately $105 per acre of land to be permanently disturbed to the fund to avoid, minimize,

and mitigate potential impacts to DT resulting from increased raven predation associated with implementation of the MSP. It is anticipated that the funds contributed by Mojave Solar would be held by the National Fish and Wildlife Foundation established under the USFWS regional raven management program until needed to implement the regionwide program.

3.0 PROJECT DESIGN FEATURES, PROJECT-SPECIFIC CONTROL MEASURES, AND IMPLEMENTATION OF PROJECT DESIGN FEATURES

To reduce the potential Project impacts to DT from common ravens, it is imperative that the PDFs (i.e., those features that are built into the Project's physical design and functioning) eliminate or mitigate any subsidizing of ravens with water, nest sites, food, or other resources. This section describes the PDFs, management practices, and Project-specific control measures that have been established to ensure that activities associated with the MSP during both the construction and operation phases do not create new subsidies that will increase the presence or attraction of ravens to the Project area. These management practices specifically address the five basic conditions of concern identified in Section 1.4. These are divided into the construction phase of the MSP (Section 3.1) and the operation phase of the MSP (Section 3.2).

3.1 Construction

Impacts associated with the construction phase of the MSP are considered to be more temporary than operational impacts. As such, temporary management practices can be implemented to effectively preclude and/or minimize the potential to attract additional ravens to the Project area. Temporary measures include best management practices (BMPs) during construction such as trash containment and removal from the construction site, limited application of water to the site, and removal of road kill. Worker education will be implemented to ensure that all food and waste is properly stored. Mojave Solar will monitor the site during construction to determine raven use and if deterrent or hazing techniques (detailed in 6.3.1) are needed. Hazing techniques involve the diligent application of a number of visual and/or auditory devices designed to scare birds and create an integrated system of negative stimuli to reduce the attraction of birds to an area. Monthly reports will be submitted outlining the raven use of the site, whether control measures are working, and recommendations.

3.1.1 Evaporation Ponds

Rainwater may collect in the four onsite evaporation ponds during the construction phase of the MSP. Given the scarcity of water resources in the desert, ravens could be drawn to this new water source. However, it should be noted that Harper Dry Lake is located adjacent to the Project area, which includes a limited water supply and marsh habitat within the southwest corner of the lake, and currently supports raven (eBird 2010). During construction monitoring, Mojave Solar will monitor for the presence of ravens and, if ravens are identified to be present at evaporation ponds, hazing techniques will be used to discourage use (mentioned in 6.3.1). If unsuccessful, additional or alternative methods will be implemented, as discussed in Section 5.0, "Adaptive Management."

3.1.2 Raven Perching, Roosting, and Nesting Sites

Equipment and/or materials associated with construction of the MSP may provide temporary perch, roost, or nest sites for ravens within the Project area. During construction monitoring, Mojave Solar will monitor raven presence and, if ravens are found perching, roosting, or nesting

on building materials, equipment, waste piles, or other construction debris, hazing techniques will be used to discourage use. During construction, if ravens are found building a nest on any of the Project components, the nest should be removed. If the nest is not detected until young are present, the birds will be allowed to complete their nesting cycle and then the nest will be removed. If ravens are found to be attracted to certain debris piles or other construction elements, attempts to modify or move the attractant will be made, and the situation will be documented.

3.1.3 Ponding Water

The application rates of water for dust-suppression activities will be predetermined to minimize excessive application and curtail ponding water within the Project area. Soil infiltration and evaporation rates will be used to determine the appropriate application amount and frequency. In the vicinity of the water truck refill area, water will run off into a collection tank or other system that will preclude surface pooling. Mojave Solar will monitor areas to make certain water does not puddle for long periods (more than 1 hour) and make recommendations for reduced water application rates, as necessary.

3.1.4 Raven Food Sources from Soil Disturbance and Roadkill

Ravens are scavengers and are well known for eating animals that have been killed along roads and highways (Boarman and Heinrich 1999). In fact, roadkill is considered to make up a substantial portion of a raven's diet. This food source facilitates increased raven nesting near roads and highways in areas that might otherwise offer little food (Kristan et al. 2004).

The operation of heavy equipment during the construction, decommissioning, and restoration phases of the MSP will cause soil disturbance within the Project area. This soil disturbance will "unearth" and expose natural food sources such as rodents and insects. Construction monitoring conducted by Mojave Solar will include observations of the MSP site, as well as access roads, to ensure that food sources are properly disposed of within containers that are not accessible to ravens.

3.1.5 Human Food and Waste Management

During the construction phase of the MSP, a trash abatement program will be prepared to ensure that trash and food items are contained in closed, secured containers on the MSP site and removed weekly to reduce potential food sources to ravens and other scavengers. Biweekly observations of the construction site and access roads will ensure proper disposal of all trash and roadkill. These observations will be included in the monitoring report. If it is found that the waste containers are not working to deter ravens from scavenging, alternative containers will be used to ensure that scavenging ceases to occur. In addition, the Worker Environmental Awareness Program (WEAP) will assist in reinforcing with workers that no trash or roadkill that might attract DT predators will be left for ravens.

3.2 Operations

Impacts associated with the operations phase of the MSP are more long term and require the implementation of ongoing PDFs and management practices for the life of the Project. If, through monitoring, it is determined that these PDFs or management practices are not effective in accomplishing the goal of this Raven Control Plan, modifications to these practices and/or additional measures will be implemented through adaptive management and monitored to ensure

the Plan's purpose and objectives are being met. All information will be recorded and presented in the annual report.

3.2.1 Evaporation Ponds

Because the ponds need to remain uncovered to maximize evaporation rates, a series of avian deterrence measures such as the BirdAvert system are being considered for incorporation into the design and operation of the evaporation ponds. The operational design of the ponds is described in detail in the MSP Evaporation Pond Monitoring and Remediation Action Plan (AECOM 2009).

Other options include the use of antiperching devices placed strategically along the perimeter of the ponds to exclude ravens and other birds from accessing the edge of the ponds to drink water. These design features will make it difficult for perching birds (e.g., ravens) and/or shorebirds and wading birds to access the water. Netting of the pond may also be considered if other design measures do not prove to be effective.

The DB will be responsible for making qualitative observations on the relative success of the deterrent(s) at each pond and providing recommendations for future improvements in monthly reports, which will be submitted to CPM, including adapting the current configuration of the antiperching devices to maximize deterrence.

3.2.2 Raven Perching, Roosting, and Nesting Sites

PDFs that will be considered to reduce raven perching, roosting, and nesting are physical bird deterrents such as bird spikes, plus auditory and visual deterrents. In addition, nest removal will occur in conjunction with monitoring, as discussed below in Section 5.3. Under specific circumstances, the Animal and Plant Health Inspection Service – Wildlife Services (APHIS–WS) is authorized to remove "offending" ravens. "Offending" ravens are ravens that are known to be depredating DTs. The purpose of this activity is to reduce or eliminate predation of DT by common ravens within the Mojave Desert in San Bernardino, Riverside, and Kern counties in California. Mojave Solar or DB will notify USFWS of ravens that show evidence of depredating tortoises (USDA 2009).

3.2.3 Ponding Water

The application rates of water for dust-suppression activities will be predetermined to minimize excessive application and curtail areas of ponding water within the Project area. Soil infiltration and evaporation rates will be used to determine the appropriate application amount and frequency. Mojave Solar will monitor areas to make certain water does not puddle for long periods (more than 1 hour) and make recommendations for reduced water application rates, as necessary, to adjust for seasonal changes. During operations, deionized water will be used to wash mirrors; however, the amount of water used will be minimal and is not anticipated to result in ponded water on site.

3.2.4 Raven Food Sources from Soil Disturbance and Roadkill

Operational activities associated with the MSP will not result in new ground or soil disturbance. As such, potential food sources for ravens will not be unearthed and no additional PDFs related to this issue are necessary.

Mojave Solar will document and remove any roadkill observed during the regular monitoring during Project operations (see below). Areas observed will include the MSP site, the associated paved and dirt access roads, staging areas, and/or any other Project area facilities that may support vehicular traffic, potentially extending to Harper Lake Road, if necessary. In addition, MSP operations staff will notify the proper Mojave Solar representative daily if roadkill is observed within these areas.

3.2.5 Human Food and Waste Management

The trash abatement program developed for the construction phase will also include operational measures to be implemented for the life of the Project. Trash and food items will be contained in closed, secured containers and removed weekly to reduce the potential attraction of ravens to the site. Mojave Solar will continue to ensure that these practices are enforced and make recommendations for improvements, where applicable, as discussed in Section 6.0.

4.0 RAVEN MONITORING STRATEGIES

This section describes the monitoring practices that will be performed as part of this Raven Control Plan. Both qualitative and quantitative monitoring activities will be used to evaluate the effectiveness of the PDFs and the other raven management and control measures implemented for the MSP. This monitoring program will be based on observations and performed during both the construction and operation phases of the MSP in an effort to record and evaluate any changes in raven activity and populations.

4.1 Construction Phase

During the construction phase of the MSP, Mojave Solar will perform reconnaissance-level surveys in the Project area at biweekly (i.e., once every two weeks), or more frequently as needed. Initially and periodically, the DB will assist Mojave Solar to ensure that monitoring objectives are being achieved. Mojave Solar will specifically focus survey efforts on the following Project features:

- Evaporation ponds,
- Waste disposal areas,
- Built structures,
- Equipment staging and storage areas,
- Locations where water will be applied to control dust and erosion,
- Potential nest sites, and
- Areas where there have been surface and soil disturbances.

Monitoring of the Project area will record when and how ravens are hazed and where problem areas occur. Mojave Solar will take note of the general activity of the ravens (i.e., flying, perching, nesting, and scavenging) as well as the general location of the observed ravens. Perching sites will be identified and actions taken to discourage future use will be recorded and monitored to determine success. Any nesting locations will be documented and uninhabited nests will be removed pursuant to methods set forth in Section 4.2.2 of this Plan.

4.2 Operation Phase

During the operation and maintenance phase of the MSP, Mojave Solar, in coordination with the DB, as appropriate, will perform monthly reconnaissance-level surveys at the MSP site for the

first two years of the Project, unless it is determined that fewer surveys are necessary. In addition, annual breeding season monitoring will be conducted at the MSP in perpetuity. Details pertaining to these monitoring requirements are discussed in detail below.

4.2.1 Ongoing Monthly Raven Monitoring

Mojave Solar will conduct monthly surveys, monitoring raven activity for the first 2 years of Project operation, beginning when the Project becomes operational. Mojave Solar will be accompanied by the DB during the first four surveys, and periodically thereafter to facilitate appropriate data collection. The DB will also periodically look at data sheets and discuss the monitoring with Mojave Solar to ensure that monitoring objectives are being achieved. After the first 2 years of Project operation, surveys will be conducted twice during the breeding season for at least 1 year out of every 5 years into perpetuity, unless results indicate more frequent or less frequent monitoring is appropriate.

Survey locations will be identified by the DB based on Project features that may influence raven presence, activity, and behavior by potentially allowing perching, roosting, and nesting opportunities or by providing other subsidies such as food and water. These Project features include tower structures, transmission poles and lines, and support structures, as well as waste disposal facilities and evaporation ponds, and may occur both inside and outside of the Project footprint, depending on access. The DB will identify up to twelve permanent sampling points. This may include the evaporation ponds, parking areas, administration buildings, and along fence lines. If it is determined that, with a reduction of points, all important areas can still be viewed, the number of permanent sampling points can be reduced, with the concurrence of CEC, CDFG, and USFWS. Points would be located within areas that have the greatest likelihood of attracting ravens. Figure 4 shows an example of how these permanent sampling locations may be set up.

The evaporation ponds will be monitored as described in this Plan and as outlined in the Evaporation Pond Monitoring/Remediation Action Plan (AECOM 2009). Overlapping surveys for both plans will be performed concurrently.

At each determined survey point, Mojave Solar will conduct a 5-minute sampling session to observe and listen for ravens. Raven sightings will be recorded along with the type of behavior (e.g., perched, flying, nesting, scavenging) and distance and direction from the survey point. If the raven(s) is found perching or nesting, detail will be recorded pertaining to the type of perch (structures, fences, etc.). Other data to be collected will include the survey start/stop time and weather (including temperature, average wind speed, and percent cloud cover). In addition, the location of any nests discovered during a survey will be documented and their location recorded using Universal Transverse Mercator (UTM) coordinates. Just prior to the initiation of the breeding season for ravens, extra effort will be taken to remove any inactive nests to prevent these nests from becoming active. The area below any nest sites will be searched each spring for any evidence that ravens are depredating DT. If evidence of predation of DTs is found, Mojave Solar or DB will notify USFWS so that APHIS–WS can be notified and the offending ravens removed.

A data sheet will be prepared in advance of operational monitoring activities that will include the aforementioned data to be collected. Surveys will be performed as scheduled unless wind or rain interferes with audible or visual detection of ravens. Surveys will be rescheduled to occur as soon as the wind or rain has subsided.

4.2.2 Breeding Season Raven Surveys

The typical raven breeding season begins in mid-February and continues through the end of June (Boarman 2002, 2003). In surveys conducted during the breeding season, Mojave Solar will systematically search project lands and identify nests, as well as evidence of DT predation at nest locations.

Surveys will be conducted by vehicle, when possible, and on foot as necessary. All trees, landscaping, utility poles, transmission towers, and other structures within the Project area will be searched for nests. If nests are encountered, Mojave Solar will contact the DB to verify nest conditions. Mojave Solar will record a UTM coordinate for any nest locations and identify the nesting substrate and the current breeding status, if it can be determined. Raven activity will be documented for all observations so that the data can be reviewed to determine how ravens are using the site. Once data have been collected, the DB will determine if the nest is unoccupied (i.e., no eggs in the nest or nestlings have fledged), in which case the nest will be removed by the DB or Mojave Solar (see description of nest removal below). If occupied nests are detected during surveys, Mojave Solar will enter the information into the appropriate database by accessing the Desert Managers Group (DMG) website (www.dmg.gov). In addition, the DB will also investigate the 30-meter radius surrounding any detected nest site and/or perch site for evidence of DT predation. If any depredated DTs are discovered, they will be photographed, a UTM coordinate collected, and the length of the DT carapace measured (or estimated). The DB will then notify USFWS within 24 hours if the nest is still active. To avoid duplication of data recording on subsequent surveys, each DT shell will be marked.

Semi-quantitative and qualitative data will be collected to document raven nesting behavior and DT predation. This survey data will provide valuable information for assessing raven behavior and documenting potential problem individuals for management actions. If the survey results reveal that raven activities appear to have increased within the Project area, modifications to the PDFs and/or other control measures through adaptive management (as described in Section 5.0) may be necessary.

4.3 Nest Removal

The majority of raven predation on DT is most likely to occur in the spring, from April to May, when DT are most active and ravens are feeding their young (Boarman and Heinrich 1999). To help reduce raven depredation on DT during this time, the removal of unoccupied raven nests will be conducted as part of the MSP-specific raven management efforts. Nest removal will only occur within Mojave Solar-controlled lands and inactive nest removal can only be conducted by the DB. Removal of active nests cannot be conducted by either Mojave Solar or DB. In situations where raven predation of DT can be documented, USFWS will be contacted within 24 hours and APHIS–WS has the authority to remove offending ravens and their nests. If an identified nest is located outside of Project area boundaries, USFWS will be notified by the DB.

If an unoccupied raven nest is detected outside of the breeding window during surveys, it will be removed by the DB. Removing raven nests outside of the breeding season may have a smaller effect on the raven population, since they may readily rebuild the following season. However, evidence suggests that birds with no nests in their territory at the beginning of the breeding season are less likely to commence nesting than those that already have intact nests (Kristan and Boarman 2003). A recent study in the Mojave Desert showed a roughly 50% decrease in the number of nests rebuilt following wintertime removal (Boarman in prep.).

4.4 Decommissioning and Restoration Phase

If the MSP requires a decommissioning and restoration phase, Mojave Solar will perform reconnaissance-level surveys in the Project area at least biweekly (or more frequently as needed) during ground-disturbance activities. Monitoring will follow the procedures set forth in the construction phase (Section 4.1 above).

5.0 ADAPTIVE MANAGEMENT

This section discusses how adaptive management will be applied as a tool to help attain the overall purpose and objectives of this Raven Control Plan. This section provides a broad definition of adaptive management, identifies the conditions that will trigger the need for implementation of adaptive management measures, and summarizes how modifications to specific PDFs and/or other control measures can be made to likely improve the Plan's overall success.

5.1 Definition

Adaptive management is a problem-solving environmental management approach to facilitate more effective management of resources to achieve desired objectives. It involves synthesizing existing knowledge, exploring alternative actions, making explicit predictions of their outcomes, selecting one or more actions to implement, monitoring to determine whether outcomes match those predicted, and using these results to adjust future plans (Holling 1978). By nature of the definition, adaptive management can be defined as an iterative and structured optimal decision-making process based on feedback and adjustment that is intended to reduce uncertainty through system monitoring. The iterative process simultaneously maximizes one or more resource objectives and accrues information needed to improve future management, either actively or passively.

Adaptive management is usually categorized in one of two ways: active or passive. Passive adaptive management involves the use of conceptual modeling to guide management actions. The model is adjusted as new knowledge is obtained and management decisions are subsequently modified. Active adaptive management involves testing alternative hypotheses through system manipulation. Passive adaptive management is based on information gained from observational studies, whereas active adaptive management is based on information gained from experimental manipulation (Holling 1978). This Plan will focus on passive adaptive management but may ultimately apply both passive and active adaptive management.

5.2 Adaptive Management Triggers

Should the results from the monitoring practices reveal that ravens are continually and actively using the Project area, modifications to the PDFs and/or other control measures through adaptive management will be necessary. The implementation of adaptive management measures will be triggered if both of the following conditions are met:

1. The monthly and/or annual breeding season raven monitoring and survey results indicate that the existing PDFs are ineffective at controlling raven presence and activity in the Project area (the raven population size has increased, active nests are present, etc.), thereby increasing the potential for DT predation; and
2. Mojave Solar has made every attempt to adjust PDFs to control raven occurrences, and has contacted and worked with the DB and the resource agencies to identify other sources of ravens and/or management measures, but increased raven occurrences and use of the Project area appears to continue.

This Plan sets forth measures to preclude attracting ravens to the Project area and control measures to eliminate those that become problematic, regardless of their association with Project activities.

5.3 Adaptive Management Measures

During implementation of the monitoring program, identified adaptive management measures will be discussed by Mojave Solar, CEC, USFWS, and CDFG before any decisions are made to incorporate them into the MSP. Adaptive management measures may include modifications to PDFs or monitoring strategies, or implementation of additional control measures. Key examples are 1) modifications to the monitoring program survey frequency, including increase or reduction of the monitoring frequency and survey points should results of surveys deem it to be warranted; 2) removal or enhancement of a PDF or management measure if it is not working; or 3) incorporating a defined control measure if impacts are observed that would not otherwise be implemented (triggered).

5.3.1 Control Practices

If the results of the monitoring efforts suggest that there is a substantial and ongoing increase in raven activity that may result in DT predation, even with the implementation of PDFs, then Mojave Solar may need to implement agency-approved additional control practices to further manage ravens in the Project area. This section defines the types of control practices that may be implemented if additional measures are determined to be necessary based on the adaptive management triggers described above in Section 5.2. If none of the control measures included below work to achieve the objectives of this Raven Control Plan, additional control measures will need to be considered and implemented.

Roadkill Removal

If Mojave Solar and/or MSP operations staff regularly observes roadkill that may be attributable to the Project, it may be necessary for Mojave Solar to develop a roadkill removal program specific to the MSP.

Hazing

Hazing techniques involve the diligent application of a number of visual and/or auditory devices designed to scare birds and create an integrated system of negative stimuli to reduce the attraction of birds to an area. Hazing must be dynamic, creative, and mobile. Hazing techniques include implementation of floating or stationary figures, helium-filled balloons, air or propane cannons, human or aircraft herding, and/or bioacoustic deterrents.

The key elements of hazing are timing, organization, variation (random), and persistence. Because ravens are adept at learning the type, timing, and location of hazing techniques, these variables must be changed frequently. This effort will help to delay raven habituation to the hazing techniques.

Often, a combination of the above tactics must be employed to be effective, as many birds become accustomed to methods quickly. If hazing techniques are determined to be necessary for the MSP, the DB and Mojave Solar, in consultation with CEC, CDFG, and USFWS, will develop a hazing program specific to the Project area. Because some of these techniques will create additional sources of noise in the areas, permission may be required from the local authorities, as there may be local ordinances that prohibit the creation of loud noises.

Methyl Anthranilate

Methyl anthranilate (MA) is a naturally occurring non-toxic, non-lethal listed compound used as a food flavoring and fragrance additive that acts as a chemosensory repellent, irritating pain receptors associated with taste and smell. It has been documented to be an effective bird repellant; however, MA is thought to have limitations for topical application as it is considered highly volatile and breaks down readily under exposure to ultraviolet (UV) light (Umeda and Sullivan 2001). With USFWS and CDFG approval, the most appropriate application of MA would be to small areas of ponding water or areas where known nesting has occurred. In areas of ponding water, it would be necessary to repeat topical application due to the chemical breakdown that occurs with exposure to UV light. In areas where known nesting has occurred, Mojave Solar could apply MA to deter nest rebuilding in that location. However, before MA is applied to any area at the MSP, research will be conducted by the DB to obtain the most current application of MA; the most effective methods to deter raven activity will then be developed in coordination with Mojave Solar and CEC.

Lethal Removal (Depredation)

Lethal removal may be considered if ravens are still attracted to the MSP even after the implementation of PDFs, modification to PDFs, and implementation of control measures. Lethal removal is also appropriate if there is evidence that nesting ravens are depredating DT. Under this control method, targeted ravens will be shot by rifle or shotgun. If shooting is not possible (e.g., on power lines) or has been proven unsuccessful, ravens will be trapped and humanely euthanized. Juvenile ravens found in nests of removed adults will also need to be euthanized humanely. Lethal removal will only occur after consultation with CDFG and USFWS, and issuance of proper permits for “taking” of ravens.

It should be noted that there is no evidence suggesting that lethal removal will have a long-lasting effect on raven population levels, raven foraging behavior, or survival of juvenile DT (Boarman 2002). Targeting and removing individuals in this fashion is also considered time consuming. However, this method can be effective if there are specific raven pairs determined to be responsible for taking relatively large numbers of DT (Boarman 2002). These individuals can often be identified by the presence of juvenile DT shells beneath their nests, which are often used for consecutive years by the same pair of breeding ravens (Boarman and Heinrich 1999). While it would be very difficult to identify the target bird(s) with absolute certainty and lethally remove both members of a pair, removing those birds known to prey on DT would likely increase the survival of juvenile DT in that vicinity (Boarman 2003).

6.0 REPORTING

During construction of the MSP, monthly monitoring reports will be prepared. Mojave Solar will then forward the reports to the CEC. These reports will provide a summary of all monitoring activities occurring within the Project area and describe any noted raven activity and/or any observations reported by MSP operations staff. During project operation, monitoring data will continue to be provided annually. The annual report will be prepared and submitted to summarize the overall monitoring results, evaluate the effectiveness (success or failure) of PDFs, and make recommendations for modification of PDFs or implementation of control measures, if needed. Results of the monitoring efforts will be used to assess the overall impacts of the MSP and specific Project components, such as evaporation ponds, on raven activities (e.g., presence or type of activity). Annual reports will be submitted to the CEC.

7.0 REFERENCES

Abengoa, Inc. (Abengoa). 2009. Application for Certification – Mojave Solar Project. July.

AECOM. 2009. Evaporation Pond Monitoring/Remediation Action Plan. December.

Boarman, William I. 1993. When a Native Predator Becomes a Pest: A Case Study. For: *Conservation and Resource Management* (S.K. Majumdar, et al., eds.), pp. 186–201. Pennsylvania Academy of Science, Easton, Pennsylvania.

Boarman, William I. 2002. Reducing Predation by Common Ravens on Desert Tortoises in the Mojave and Colorado Deserts. Prepared for the Bureau of Land Management (BLM) by the U.S. Geological Survey (USGS), Western Ecological Center.

Boarman, William I. 2003. Managing a Subsidized Predator Population: Reducing Common Raven Predation on Desert Tortoises. *Environmental Management*. V32:2 pp. 205–217.

Boarman, W., and B. Heinrich. 1999. Common Raven. *The Birds of North America*. Eds. A. Poole, and F. Gill., No. 476. The Birds of North America, Inc., Philadelphia, Pennsylvania.

eBird. 2010. WWW.ebird-.org

Holling, C. S. 1978. *Adaptive Environmental Assessment and Management*. Chichester: Wiley.

Kristan, W. B., III, and W. I. Boarman. 2003. Spatial Pattern of Risk of Common Raven Predation on Desert Tortoises. *Ecology* 84(9):2,432–2,443.

Kristan, W. B., III, W. I. Boarman, and J. J. Crayon. 2004. Diet Composition of Common Ravens Across the Urban-Wildland Interface of the West Mojave Desert. *Wildlife Society Bulletin* 32(1):244–253.

Umeda, K., and L. Sullivan. 2001. Evaluation of Methyl Anthranilate for Use as a Bird Repellent in Selected Crops. University of Arizona College of Agriculture 2001 Vegetable Report. Available at http://ag.arizona.edu/pubs/crops/az1252/.

United States Department of Agriculture (USDA). 2009. Animal and Plant Health Inspection Service: Wildlife Services. Work Plan on Public Land Administered by the U.S. Department of Interior Bureau of Land Management, California Desert District. March to September.

This page intentionally left blank.

ATTACHMENT A

FIGURES 1–4

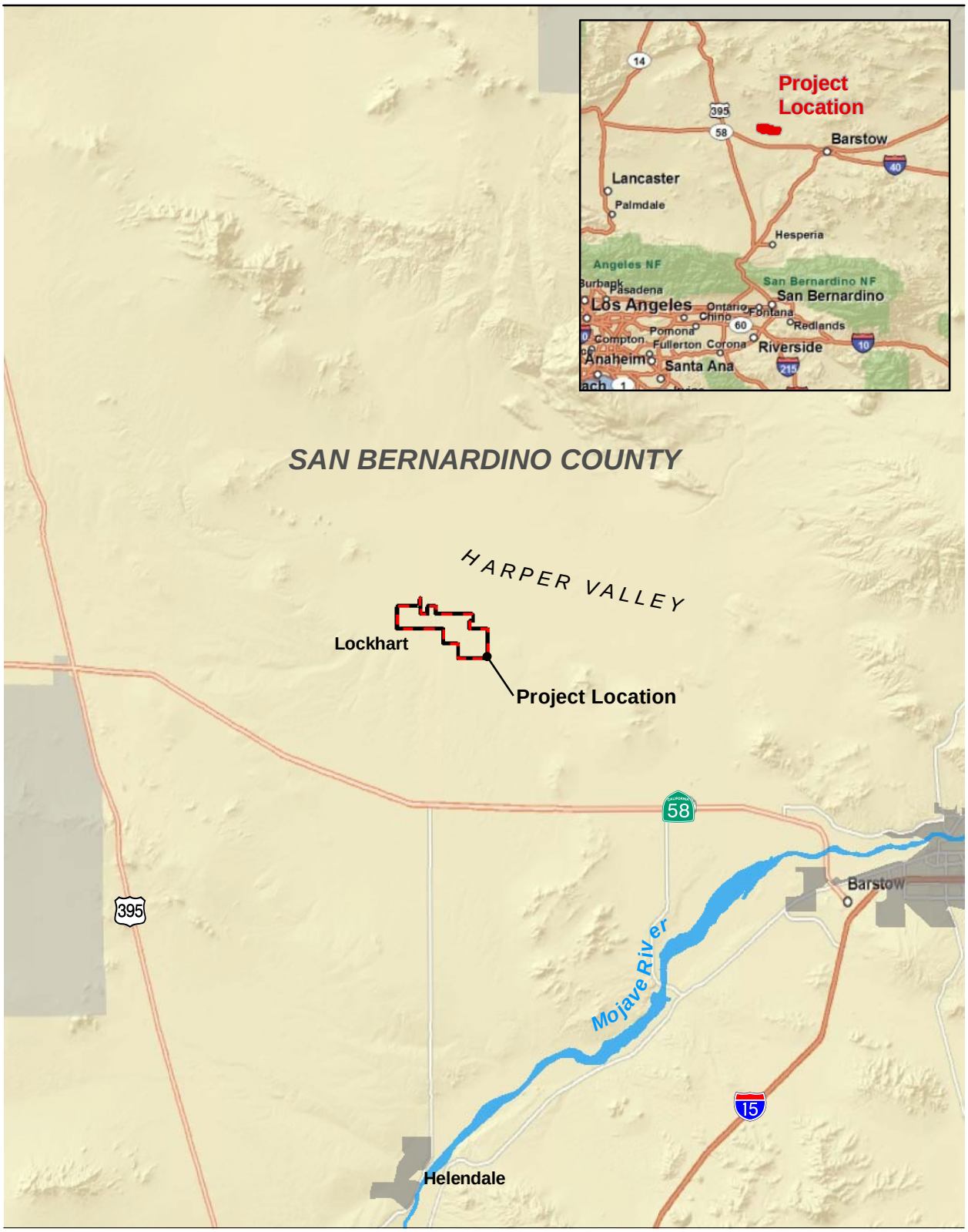

Source: Mojave Solar, LLC 2010; ESRI 2010

5 2.5 0 5 Miles

Scale: 1 = 316,800; 1 inch = 5 mile(s)

Figure 1
Regional Map: Mojave Solar Project

Path: P:\2008\08080191 Harper Lake Abengoa AFC\6.0 GIS\6.2 Project Directory\6.2.5 Layout\Compliance\Raven\Regional Map Mojave Solar Project Site.mxd, 12/10/10, IrelandM

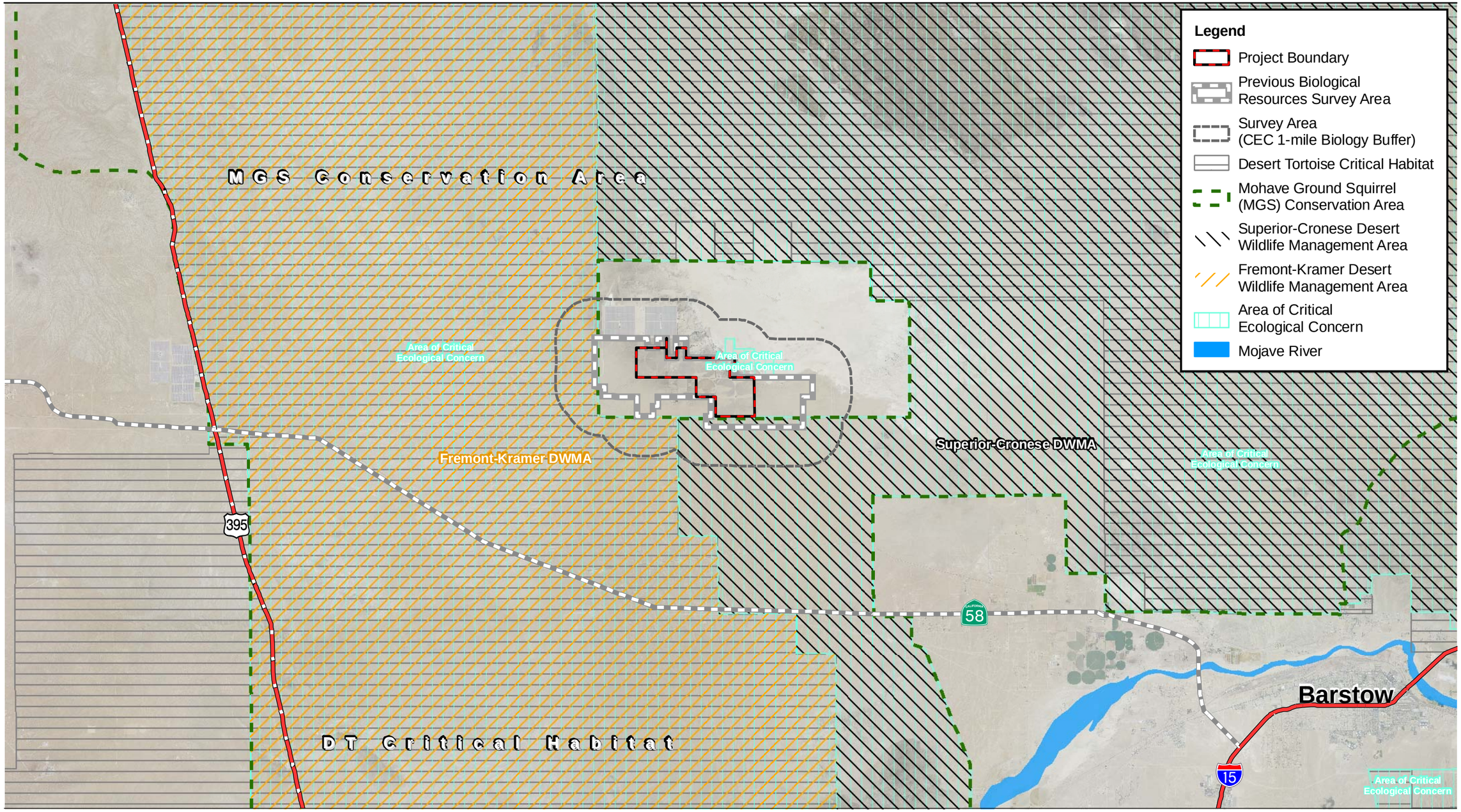

Source: NAIP 2005; USFWS 2006; BLM 2009; Mojave Solar, LLC 2009; BLM 2010

2.5 1.25 0 2.5 Miles

Scale: 1 = 158,400; 1 inch = 2.5 mile(s)

Figure 2
Vicinity Map: Mojave Solar Project Site

Path: P:\2008\08080191 Harper Lake Abengoa AFC\6.0 GIS\6.2 Project Directory\6.2.5 Layout\Compliance\Raven\Vicinity Map.mxd, 01/05/11, SteinB

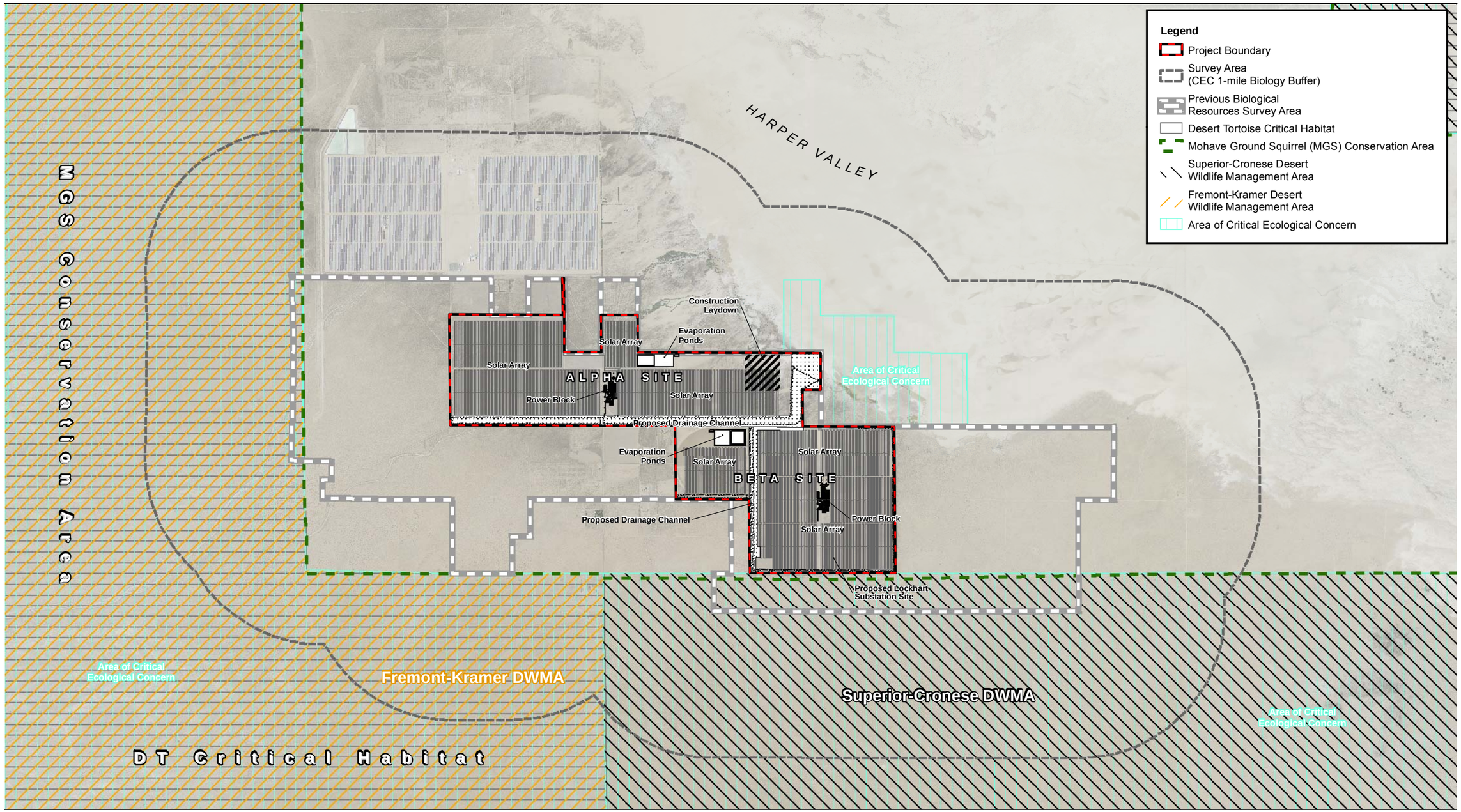

Source: NAIP 2005; USFWS 2006; BLM 2009; Mojave Solar, LLC 2009; BLM 2010

3,500 1,750 0 3,500 Feet

Scale: 1 = 42,000; 1 inch = 3,500 feet

Figure 3
Plant Site Layout

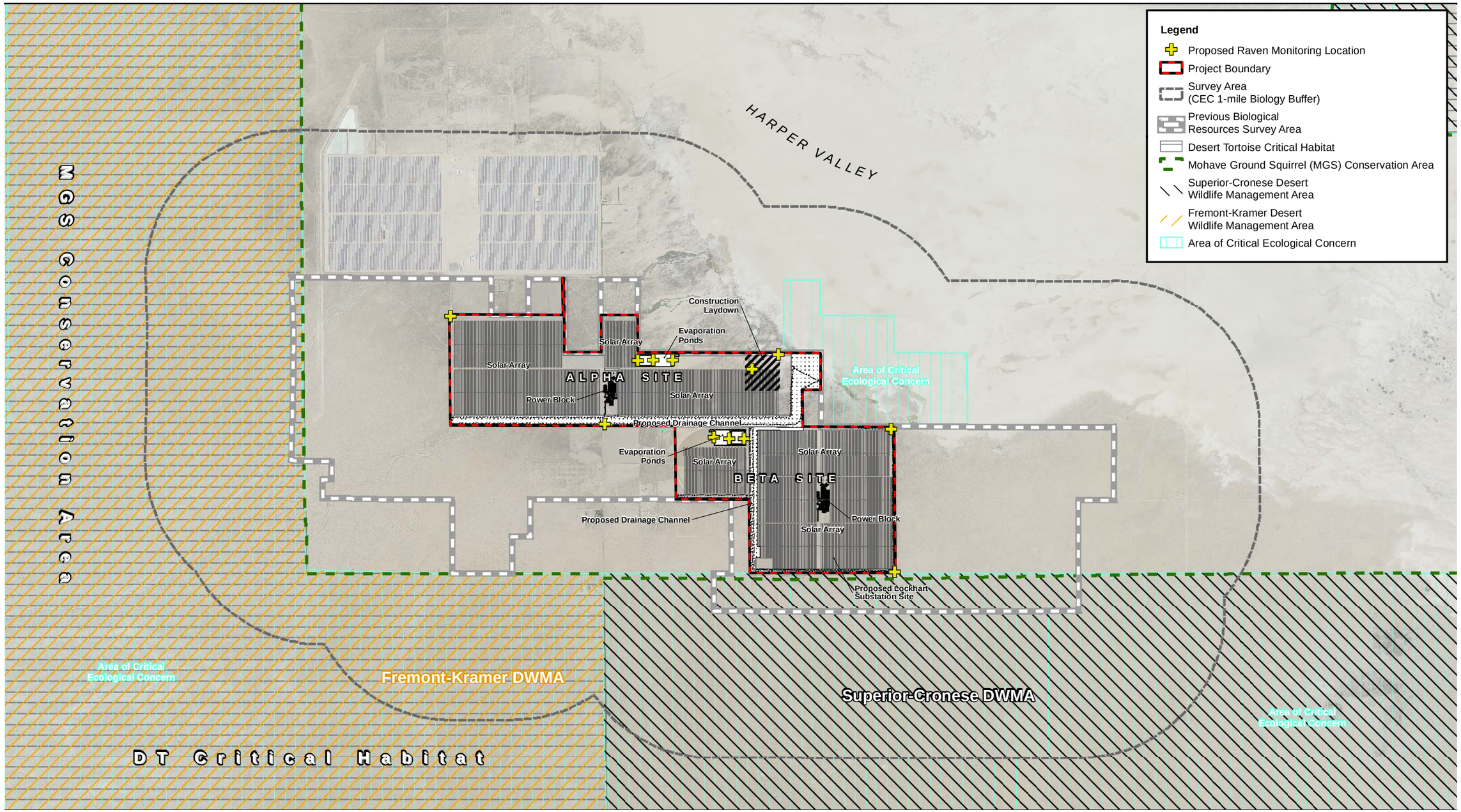

Source: NAIP 2005; USFWS 2006; BLM 2009; Mojave Solar, LLC 2009; BLM 2010

3,500 1,750 0 3,500 Feet

Scale: 1 = 42,000; 1 inch = 3,500 feet

Figure 4
Raven Monitoring Areas

Mojave Solar Project - Common Raven Monitoring, Management, and Control Plan

Path: P:\2008\08080191 Harper Lake Abengoa AFC\6.0 GIS\6.2 Project Directory\6.2.5 Layout\Compliance\Raven\Raven Monitoring Areas.mxd, 12/20/10, IrelandM

APPENDIX M-3

BURROWING OWL MONITORING AND MITIGATION PLAN

DRAFT
MOJAVE SOLAR PROJECT
BURROWING OWL
MONITORING AND MITIGATION PLAN

Prepared for:

Mojave Solar, LLC
13911 Park Avenue, Suite 206
Victorville, California 92392
Contact: Scott Frier
Phone: (760) 617-2570

Prepared by:

AECOM
1420 Kettner Boulevard, Suite 500
San Diego, California 92101
Contact: Lyndon Quon
Phone: (619) 233-1454

January 2011

TABLE OF CONTENTS

Section **Page**

1.0 INTRODUCTION 1
- 1.1 Purpose of the Plan 1
- 1.2 Project Background 2
- 1.3 Definitions 5
- 1.4 Roles and Responsibilities 5
- 1.5 2006–2009 Survey Results 7

2.0 PASSIVE RELOCATION METHODS 13
- 2.1 Nonnesting Season Preactivity Survey 13
- 2.2 Passive Relocation 14
- 2.3 Artificial Burrow and Relocation Site 17
- 2.4 Preconstruction Surveys 20

3.0 MONITORING 23
- 3.1 Monitoring Passive Relocation Areas Left Idle for More Than 30 Days 23
- 3.2 Nesting Season Occupied Burrow Monitoring 23
- 3.3 Artificial Burrow and Relocation Area Monitoring 24

4.0 REPORTING 25

5.0 WESTERN BURROWING OWL COMPENSATION LANDS 27

6.0 REFERENCES 29

APPENDIX A. Burrowing Owl Survey Protocol and Mitigation Guidelines

LIST OF FIGURES

Figure **Page**

1 Regional Map 3
2 Burrowing Owl Observations 9
3 Vegetation Communities 11
4 Artificial Burrowing Owl Burrow Design A 18
5 Artificial Burrowing Owl Burrow Design B 19

LIST OF TABLES

Table **Page**

1 2006–2008 WBO Protocol Survey Results and Other WBO Occurrences 8

1.0 INTRODUCTION

1.1 PURPOSE OF THE PLAN

This Burrowing Owl Mitigation Plan (Plan) describes the actions to be taken to protect resident and/or nesting western burrowing owls (*Athene cunicularia hypugea*; WBO) known to occur within and in the vicinity of the proposed Abengoa Mojave Solar Project (AMS or Project). The Plan specifies a passive relocation approach that, when implemented, will facilitate avoidance, minimization, and the offset of impacts to WBO relocated from the Project Disturbance Area. The primary purpose of this Plan is to provide a strategy that will facilitate the protection of WBO, a California Species of Special Concern, during AMS construction. This Plan fulfills the Project mitigation measures identified in the Project Application for Certification (AFC) (MSLLC 2009) and Condition of Certification (COC) BIO-13 in the Final Commission Decision (CEC 2010), requiring passive relocation and/or non-disturbance buffers (area in which no activity will occur) of WBO.

Specific objectives for WBO protection addressed by this Plan are as follows:

- Provide avoidance measures to protect WBOs during Project implementation.
- Describe the strategy and methodology for passive relocation of all WBOs within the Project area to a nearby area that provides suitable nesting and foraging habitat.
- Minimize impacts to WBOs within the passive relocation site.
- Assess the success of the WBO passive relocation effort through monitoring.
- Implement mitigation/compensation measures for WBO.

These objectives will be met through the following actions:

- Detecting the locations of WBO-occupied and WBO-suitable burrows prior to the nesting season (February 1 through August 31) for Project Disturbance Areas in which construction will occur plus a 160-foot construction buffer of that area;
- Identifying suitable artificial burrow location sites, in coordination with the California Department of Fish and Game (CDFG), and California Energy Commission (CEC) Compliance Project Manager (CPM) beyond 160 feet of the overall Project Disturbance Area within the compensation lands;

- Passively relocating, banding, and monitoring WBO from identified WBO burrows within the Project Disturbance Areas during the nonnesting season (September 1 through January 31);
- Monitoring all areas cleared of WBO during preconstruction surveys for the period prior to ground disturbance;
- Monitoring all WBO-occupied burrows in the 160-foot construction buffer and any burrows occupied and surrounded with nondisturbance fencing during nesting season;
- Maintenance, monitoring, reporting, and management of the WBO on the relocation property; and
- Monitoring of mitigation lands for 2 years (two spring and two winter surveys per year).

1.2 PROJECT BACKGROUND

The Abengoa Mojave Solar Project (AMSP or Project) is a solar electric generating facility to be located on approximately 1,765 acres in unincorporated San Bernardino County, California, approximately 26 miles northwest of Barstow. Mojave Solar LLC, a subsidiary of Abengoa Solar Inc., (Abengoa or ASI) will own and operate the project. ASI filed an Application for Certification (AFC) with the California Energy Commission (CEC) for the Project on August 10, 2009. The CEC issued a Final Permit Decision adopting the Presiding Member's Proposed Decision (PMPD) to recommend licensing the project on September 8, 2010.

The Project site is accessed by Harper Lake Road, which is located approximately 20 miles west of Barstow along the Highway 58 corridor. The Project site is approximately six miles north of where Harper Lake Road intersects with Highway 58. See the regional map (Figure 1).

The project site is comprised of private property historically used as the Lockhart Ranch complex. The site once served as an agricultural and cattle center and included farming activities that used flood and pivot system irrigation.

The Project will implement well-established parabolic trough technology to heat a heat transfer fluid (HTF). The heated HTF will generate steam in solar steam generators (SSGs), and the steam will then be expanded through a steam turbine generator (STG) to produce electrical power.

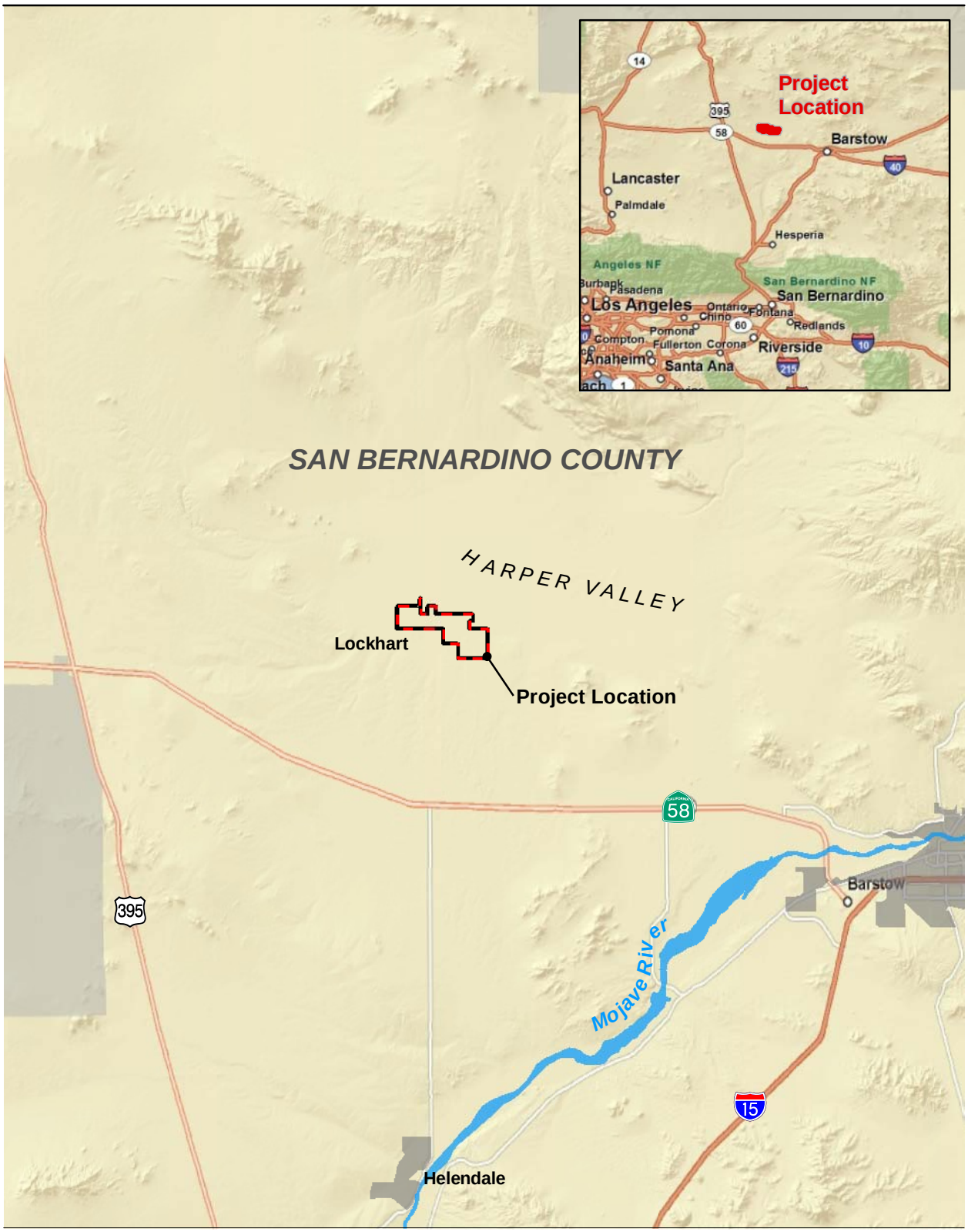

Source: Mojave Solar, LLC 2010; ESRI 2010

5 2.5 0 5 Miles

Scale: 1 = 316,800; 1 inch = 5 mile(s)

Figure 1
Regional Map

Path: P:\2008\08080191 Harper Lake Abengoa AFC\6.0 GIS\6.2 Project Directory\6.2.5 Layout\Compliance\WBO\Regional Map Mojave Solar Project Site.mxd, 12/16/10, IrelandM

The Project will have a combined nominal electrical output of 250 megawatts (MW) from twin, independently-operable solar fields (Alpha and Beta), each feeding a 125-MW power island. The Alpha site is approximately 950 acres in size, and the Beta site is approximately 815 acres. Approximately 70 percent (%) of the total project area will consist of solar fields. Approximately 3% of the site will be occupied by the power blocks, with the remaining 27% consisting of drainage improvements, evaporation ponds, a substation, and other common elements. The electrical output from the Alpha and Beta sites will join at an on-site transmission line interconnection substation to form one full-output transmission interconnection. The power generated by the project will be transmitted to Southern California Edison's (SCE's) transmission grid through SCE's existing 230-kilovolt (kV) Kramer-Cool Water #1 transmission line. The entire site perimeter will be fenced.

The sun will provide 100% of the power supplied to the Project through solar-thermal collectors; no supplementary fossil-based energy source (e.g., natural gas) is proposed for electrical power production. However, each power island will have a natural-gas-fired auxiliary boiler to provide equipment freeze protection and HTF freeze protection. The auxiliary boiler will supply steam to HTF heat exchangers as needed during offline hours to keep the HTF in a liquid state when ambient temperatures fall below its freezing point of 54 degrees Fahrenheit (F). Each power island will also have a diesel engine-driven firewater pump for fire protection and a diesel engine-driven backup generator for power plant essentials.

The Project will use wet cooling towers for power plant cooling, and the project owner owns adjudicated water rights for this purpose. Water for cooling tower makeup, process water makeup, and other industrial uses such as Solar Collector Array (SCA) washing will be supplied from onsite groundwater wells drawing from these water rights and will also be used to supply potable water. A packaged water treatment system will be used to treat the water to meet potable standards since the source is brackish.

A sanitary septic system and onsite leach field will be used to dispose of sanitary wastewater at each power island. Project cooling water blowdown will be piped to lined, onsite evaporation ponds for each plant area. The ponds will be sized to retain all solids generated during the life of the plant. However, if required for maintenance, dewatered residues from the ponds could be sent to an appropriate offsite landfill as non-hazardous waste.

Natural gas for the Project's ancillary purposes, such as the auxiliary boilers, space heating, and the like will be supplied by a Southwest Gas Corporation (SGC) owned pipeline that runs to the

Project boundary near the Alpha power island. No offsite pipeline facilities are proposed as a part of this Project.

Construction of the AMS facility, from site preparation and grading to commercial operation, is expected to take approximately 2-1/2 years. Commercial service is expected by winter of 2013. The AMS project has an expected operating life of between 30 years to 40 years. Whenever the facility is closed, whether temporarily or permanently, the closure procedures outlined in the CEC Decision will ensure compliance with applicable laws, ordinances, regulations, and standards (LORS).

Once the Project is completed and the site is developed, the site would be devoid of vegetation and likely would no longer provide suitable habitat for WBO.

AECOM was contracted by ASI to perform environmental services to support the review process being undertaken by CEC. The WBO is protected under the Federal Migratory Bird Treaty Act (MBTA) and is designated as a Species of Special Concern by CDFG.

1.3 DEFINITIONS

The following terms will be used throughout this report:

- Project Biological Resources Survey Area (BRSA): The Project BRSA includes the Project Disturbance Area and all associated buffers.
- Project Disturbance Area: Includes the area of anticipated ground disturbance associated with implementation of the Project.

1.4 ROLES AND RESPONSIBILITIES

ASI is ultimately responsible for implementing this WBO Plan. It is anticipated that ASI contractors and other parties responsible for implementing components of this WBO Plan will include the following:

EPC Contractor(s): The engineering, procurement, and construction (EPC) contractor construction manager will have ultimate oversight of the construction contractor to ensure compliance with the provisions of this WBO Plan. Contractual language will be included in construction documents and ongoing maintenance contracts to verify that all contractors, subcontractors, vendors, maintenance personnel, and other parties performing either construction

or ongoing maintenance or repairs at the site abide by and implement the provisions of this WBO Plan as it relates to their work. Implementing the construction provisions of this WBO Plan will be a part of construction contracts. Landscape contractors and other specialists will implement specific provisions of this WBO Plan either as subcontractors to the general construction contractor or through independent contracts with ASI.

California Energy Commission: CEC provided guidelines and COCs for the Project. CEC, acting through the Compliance Project Manager (CPM), will determine whether the WBO Plan and activities performed under the WBO Plan have been satisfied.

Designated Biologist: ASI will assign a Designated Biologist (DB) to the Project. A resume of the proposed DB, along with the required three references and contact information, will be submitted to the CEC CPM for approval in consultation with CDFG and the U.S. Fish and Wildlife Service (USFWS). The DB will have the following background and training:

- Bachelor's degree in biological sciences, zoology, botany, ecology, or a closely related field and 3 years of experience in field biology or current certification of a nationally recognized biological society such as The Ecological Society of America or The Wildlife Society; and
- At least 1 year of field experience with biological resources found in or near the Project area.

In lieu of the above requirements, the resume will demonstrate, to the satisfaction of the CPM in consultation with CDFG and USFWS, that the proposed DB has the appropriate training and background to effectively implement the WBO Plan. ASI will ensure that the DB performs the activities specified in the WBO Plan.

ASI will also designate an alternate biologist with the same qualifications as the DB, outlined above.

Biological Monitor: ASI will designate a Biological Monitor(s) to provide oversight of WBO surveys, relocation, and protection measures, and to ensure compliance with the provisions of this WBO Plan. The Biological Monitor will be responsible for detecting WBO within and adjacent to construction areas and reinforcing worker education regarding protective measures. The Biological Monitor will be contracted by ASI and must be knowledgeable about the Project, WBO avoidance and protection obligations, and the habitat use of WBO in the vicinity of the Project area.

1.5 2006–2009 SURVEY RESULTS

A reconnaissance-level survey was conducted in 2006 and protocol surveys were conducted in spring 2007 and 2008 by AECOM biologists to determine WBO presence/absence, distribution, abundance, and breeding status within a broad expanse of land under the control of the Applicant. The ultimate proposed Project was sited within a portion of this land, in order to avoid and minimize Project effects to biological resources (EDAW 2007, 2009). Figure 2 displays the locations of WBOs observed during the 2006 reconnaissance survey and the 2007 and 2008 protocol surveys. Surveys for WBO were conducted per California Burrowing Owl Consortium (CBOC) protocol (CBOC 1993), and were focused to determine the presence or absence, distribution, abundance, and breeding status of the species. Surveys were conducted within the lands under control of the Applicant, plus a 500-foot buffer per the CBOC protocol, with the addition of a 1-mile buffer as directed by CEC where two CEC-recommended transects within a 1-mile buffer were also conducted. Transects located at ¾-mile and 1-mile intervals from and parallel to the disturbance boundary were surveyed. The limits of the survey extend to this 1-mile CEC buffer.

Information collected on WBO was included in the biological resources analysis in the Project AFC, which quantifies potential impacts on WBO and identifies appropriate avoidance, minimization, and mitigation measures. A detailed description of the survey methodology and results can be found in the Project AFC, Volume 3 (MSLLC 2009).

Most of the lands under control of the Applicant, as well as the adjacent buffer, are considered suitable WBO habitat. The survey area consists of primarily previously disturbed vegetation. Within the proposed Project site, the dominant vegetation community is fallow agricultural fields, with lesser patches of disturbed areas, active agriculture, saltbush scrub regrowth, and minor pockets of vegetation associated with the Harper Dry Lake margin (Figure 3).

During 2006 reconnaissance surveys, four WBO individuals were detected along the borders of the Project area. Protocol surveys in 2007 found a pair of WBO plus five individual WBOs within the Project area. Additionally, four individual WBO were found outside the Project area in the 1-mile survey buffer. During WBO surveys in 2008, a single WBO was observed within the Project area, and one WBO was observed within the 1-mile survey buffer. A pair of WBO that had been observed in the Project area during 2007 surveys was not observed in the 2008 surveys. A domestic dog was observed within this area, so the loss of the pair may have been due to dog predation, or the owls may have simply moved. The number of WBO observations, year, and proximity to the Project area are detailed in Table 1, below.

Table 1
2006–2008 WBO Protocol Survey Results and Other WBO Occurrences

Distinct Observation(s)	Year	Area/Proximity of Project Area
4 individuals	2006	Within eastern section of Project area
4 individuals	2007	Within 1-mile survey buffer east and south of Project area
5 individuals plus 1 pair	2007	One WBO within western section, all other WBO within eastern section of Project area
1 individual	2008	Within 1-mile survey buffer east of Project area
1 individual	2008	Within eastern section of Project area

Burrows where WBOs were either observed or where their sign was documented were all located in flat, sparsely vegetated areas. The low density of WBO in the Project site is consistent with the documented low general numbers of the species in the surrounding region.

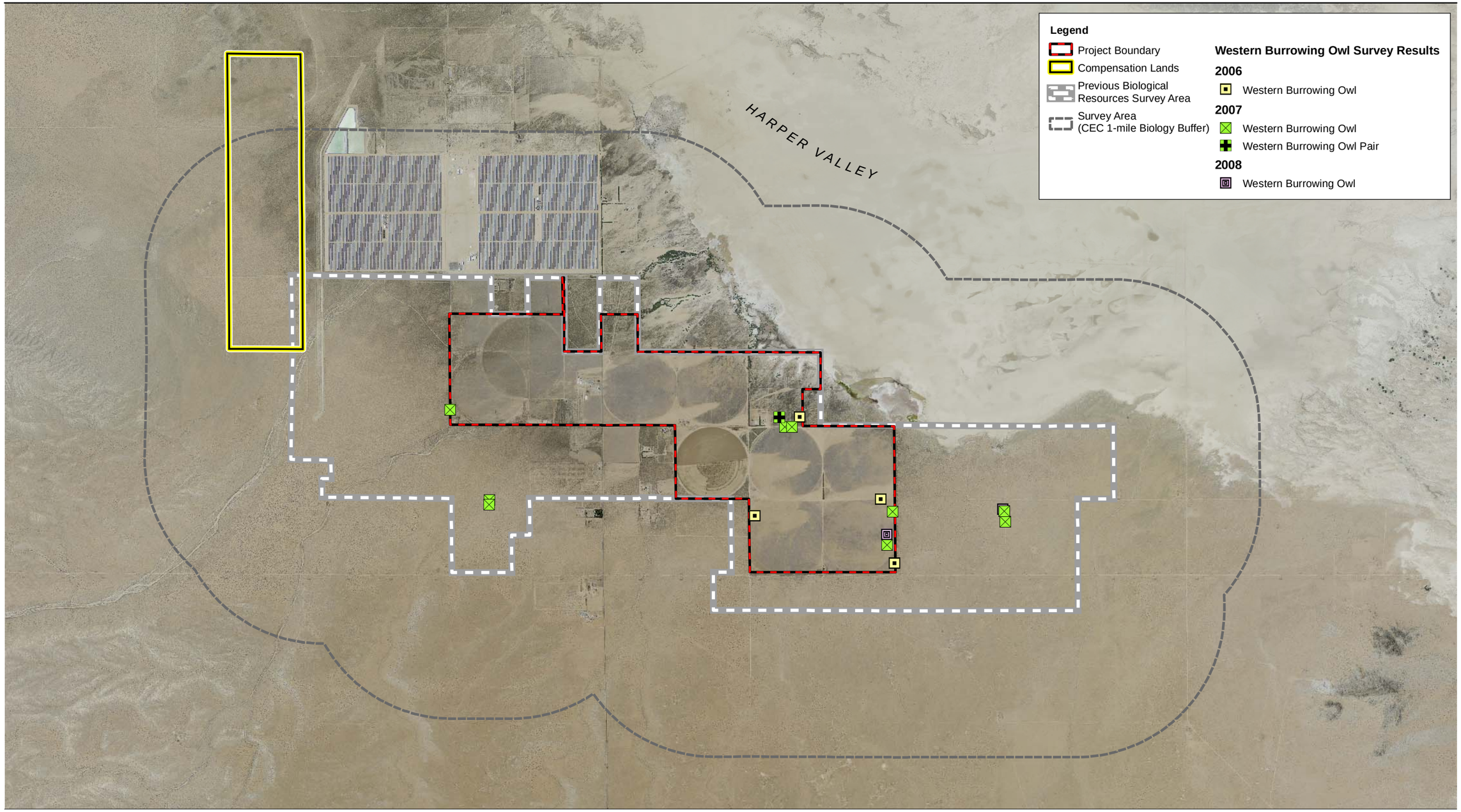

Source: NAIP 2009; Mojave Solar, LLC 2009; AECOM 2009

3,500 1,750 0 3,500 Feet

Scale: 1 = 42,000; 1 inch = 3,500 feet

Figure 2
Burrowing Owl Observations

Mojave Solar Project - Burrowing Owl Management Plan

Path: P:\2008\08080191 Harper Lake Abengoa AFC\6.0 GIS\6.2 Project Directory\6.2.5 Layout\Compliance\WBO\WBO Occurrences.mxd, 01/05/11, LeeJ

This page intentionally left blank.

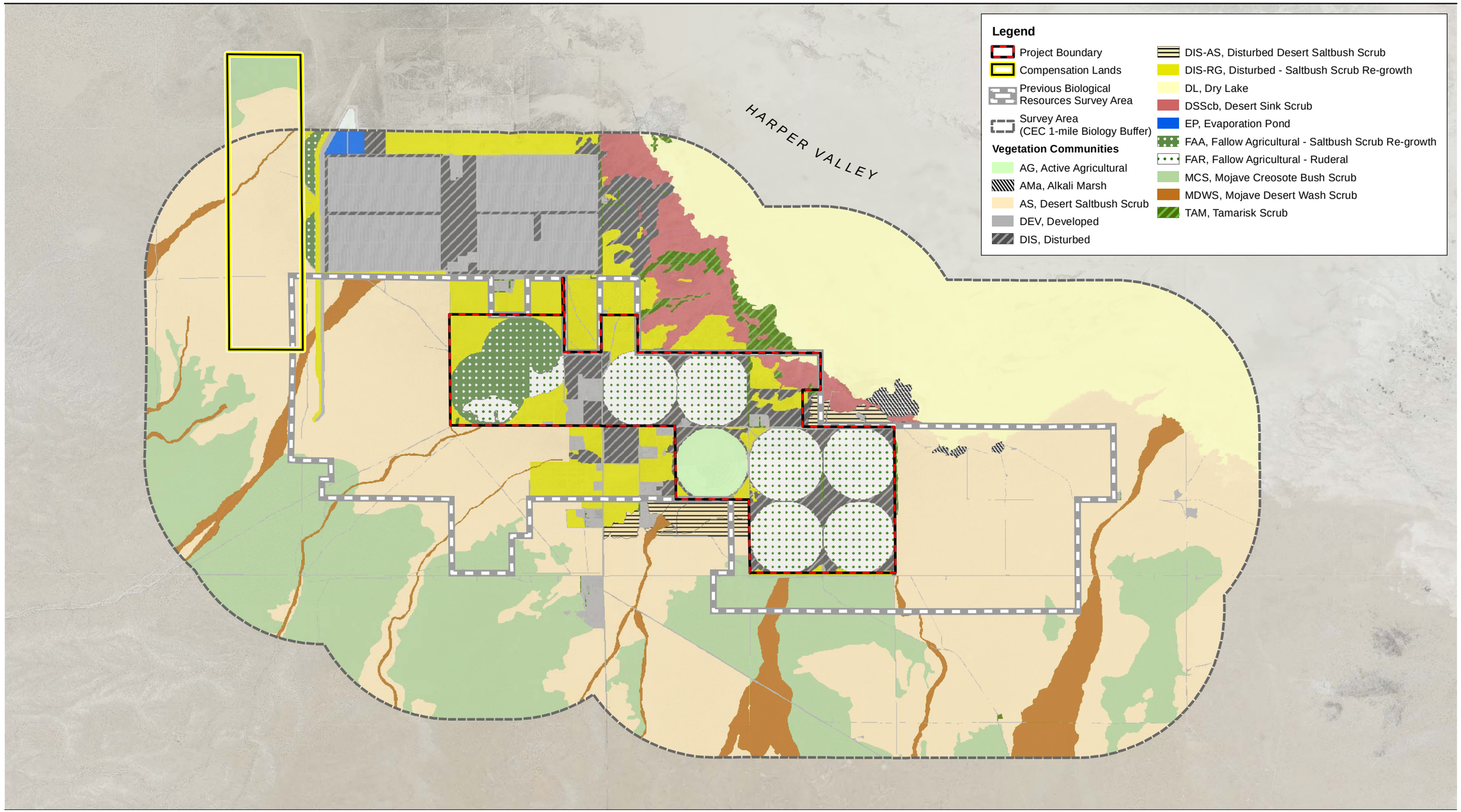

Source: NAIP 2009; Mojave Solar, LLC 2009; AECOM 2009

3,500 1,750 0 3,500 Feet

Scale: 1 = 42,000; 1 inch = 3,500 feet

Figure 3
Vegetation Communities

Mojave Solar Project - Burrowing Owl Management Plan

Path: P:\2008\08080191 Harper Lake Abengoa AFC\6.0 GIS\6.2 Project Directory\6.2.5 Layout\Compliance\WBO\Vegetation Communities.mxd, 01/05/11, LeeJ

This page intentionally left blank.

2.0 PASSIVE RELOCATION METHODS

This section discusses the specific procedures and methods to be used to achieve the purposes and objectives of this Plan, including preactivity surveys, preconstruction surveys, artificial burrow installation and passive relocation protocols. Preactivity surveys are conducted outside the nesting season. This is generally the time when passive relocation can occur, but passive relocation can also occur after it has been determined by a qualified biologist that the young have fledged from the nest. Preconstruction surveys are conducted 30 days prior to the initiation of ground disturbing activities. Preactivity surveys can function as preconstruction surveys if they are conducted within 30 days prior to construction. Artificial burrows are to be constructed to provide burrow opportunities for WBOs that have been passively relocated and to provide burrow opportunities for WBOs within the area.

2.1 NONNESTING SEASON PREACTIVITY SURVEY

Nonnesting season preactivity surveys as described in this section are required to identify locations of WBO within the Project area and a 160-foot survey buffer. These surveys will be conducted during the nonnesting season (September 1 through January 31) prior to planned activity in all Project Disturbance Areas. They will involve a burrow survey (CBOC Phase II) to update the protocol surveys conducted in 2007 and 2008, and identify the locations of any newly established WBO-occupied or WBO-suitable burrows. Focused surveys will be conducted as necessary at dawn or dusk according to CBOC guidelines to determine presence or absence of WBO at suitable burrows and/or where sign is observed. This survey will be conducted in the areas where construction will occur during that year plus a 160-foot construction buffer of that area. The survey will be staffed by qualified wildlife biologists. Specific requirements of this protocol stipulate that walking survey transects will be spaced to allow 100% visual coverage of the ground surface; distance between transect center lines will be no more than 98 feet and will be reduced to account for differences in terrain, vegetation density, and ground surface visibility. This survey will be conducted by walking through suitable habitat over the Project Disturbance Area and within 160 feet of the Project Disturbance Area. This 160-foot buffer zone is included to account for adjacent burrows and foraging habitat outside the Project Disturbance Area and impacts from factors such as noise and vibration due to heavy equipment, which could impact resources outside the Project Disturbance Area (CBOC 1993). The results of the nonnesting season preactivity survey will be included as an addendum to the final version of the Burrowing Owl Monitoring and Mitigation Plan (detailing the number of WBO observed within the Project

area), which will be submitted within 10 days of completion of the WBO preconstruction surveys to the CPM, CDFG, and USFWS.

This survey serves three purposes:

1. Identify any WBO that will be color leg-banded with aircraft aluminum bands in accordance with the guidance provided by the U.S. Geological Survey (USGS) bird banding lab in order to monitor relocation success. This process is discussed in Section 2.1.

2. Identify all burrows from which WBO will need to be passively relocated or excluded from future use during the allowable relocation window prior to the start of the breeding season. Passive relocation of WBO is discussed in Section 2.1.

3. Determine the number of WBOs occupying the Project Disturbance Areas scheduled for activity to determine the number of artificial burrows needed per CBOC guidelines (five artificial burrows will be installed for each identified WBO burrow in the Project area that would be destroyed). Artificial burrow installation and site selection are discussed in Section 2.2.

4. If Project disturbance is scheduled to start within 30 days of this preactivity survey, this survey serves as the preconstruction survey. Preconstruction survey protocols and scheduling considerations are discussed in Section 2.3.

2.2 PASSIVE RELOCATION

Passive relocation is considered the preferred option to trapping (CBOC 1993). During the non-breeding season (September 1 to January 31), owls to be relocated will be color-banded with aircraft aluminum bands in accordance with USGS bird banding lab guidelines by approved and permitted biologists. According to BIO-13 of the CECs Conditions of Certification (COCs), WBOs will be given a minimum of 3 weeks to become familiar with the new artificial burrows to be constructed within compensatory habitat outside of the Project area, after which eviction of owls within the Project area will begin. If it can be determined that suitable habitat (including natural burrows) is present within 600 meters of occupied WBO burrows (but outside the Project disturbance area) then a three week waiting period should not be necessary. The WBOs would already be familiar with the available natural burrows within the area, and the constructed artificial burrows are not likely to be visited unless the WBOs to be relocated are in close proximity to the compensatory habitat. In such an instance, the DB will coordinate with DFG, USFWS and the CPM to review the availability of potential habitat nearby for passively

relocated owls, as well as the relocation strategy and timing as it relates to construction of artificial burrows. The success of the passive relocation effort will be determined through the monitoring effort as proposed in Section 3 below.

One-way doors as described by Trulio (1995) and Clark and Plumpton (2005) will be used to facilitate passive relocation of WBO. If relocation occurs near the breeding season, focused monitoring of the WBOs will be conducted to ensure nesting is not underway or to determine if nesting has been concluded prior to relocation efforts. Burrows will be excavated after determined vacant by use of a down-hole camera, monitoring, and the use of one-way doors.

Excluded burrows will be monitored daily for three days to confirm no additional WBO use them before excavating burrows. After burrows are confirmed to no longer be in use, the burrow will be excavated using hand tools and refilled to prevent reoccupation. Sections of flexible plastic pipe or burlap bag will be inserted into the tunnels during excavation to maintain an escape route for any WBOs inside the burrow.

WBO must be excluded from WBO-occupied and WBO-suitable burrows identified during the nonnesting preactivity survey prior to the following nesting season (February 1 through August 31) and any Project disturbance. WBO passive relocation efforts will be led by the DB and staffed by qualified wildlife biologists. WBO will be excluded from identified burrows by installing one-way doors (e.g., 4-inch-diameter corrugated irrigation pipe with gravity-closing see-through door) in each burrow entrance.

The sequence of events to exclude WBO from the Project Disturbance Area is described below:

1. Install one-way doors in all suitably sized burrows (greater than or equal to 4 inches in diameter) actively used by WBO and suitable burrows in the immediate vicinity of the occupied burrow(s). Suitable burrows without recent WBO sign will be addressed first. One-way doors will be installed in burrows actively used by WBO after installation occurs on all other suitable burrows in the immediate vicinity to avoid multiple evictions.

2. One-way doors will be installed during the afternoon with care taken not to flush any WBO from the Project Disturbance Area during one-way door installation. If any WBO are detected leaving the Project Disturbance Area in response to one-way door installation, installation activity will cease until the activity no longer poses a potential harassment threat (all detected WBO have voluntarily left the vicinity). In the event a burrow is larger than the diameter of the one-way door, that burrow will be remotely

investigated with a fiber-optic scope camera to ensure an animal larger than the one-way door is not occupying the burrow. If not inspected, berms used to hold the one-way door in place may trap larger wildlife.

3. For known occupied burrows, WBO will be observed at dusk (i.e., beginning 1 hour before evening civil twilight and ending at twilight) to document their departure from the Project Disturbance Area. This may require more than one observer to account for the location of all WBO. All observers will remain 250 feet from the one-way doors under surveillance so their presence does not alter the WBO behavior.

4. One-way doors will be installed in the burrows that the WBO have been recently using after the WBO have departed the area at dusk. One-way doors installed in known occupied burrows will be installed at not greater than a 45 degree angle from the ground to ensure WBO are able to depart.

5. On the 2 days following one-way door installation, the exclusion area will be observed beginning at dawn (i.e., no later than morning civil twilight) until at least 1 hour after sunrise the following morning and WBO presence or absence recorded in the exclusion area and their reaction to the presence of one-way doors documented.

6. On the third morning following one-way door installation, using a fiber-optic scope camera, the recently used burrows identified in steps 2 and 4 above will be scoped. Suitable burrows without recent WBO sign (step 2) will be scoped to ensure that no other sensitive species are currently occupying burrows. Burrows known to be recently occupied by WBO (step 4) will be scoped to ensure all WBO have vacated the burrow. Upon confirmation that the burrow is unoccupied, the burrows will be excavated with hand tools using flexible pipe to allow wildlife to escape, and refilled to prevent reoccupation by WBO or other sensitive species.

7. The Project Disturbance Area and 160-foot buffer area will be monitored for WBO presence, including sign, for seven mornings (beginning at morning civil twilight) after the passive relocation effort is complete to ensure that other resident wildlife do not reexcavate burrows and WBO do not reoccupy those burrows.

The results of the passive relocation effort will be included in a report to the CPM, CDFG, and USFWS. This information will also be included in the Project's Annual Compliance Report.

2.3 ARTIFICIAL BURROW AND RELOCATION SITE

In the event that WBO are observed within the Project area during nonnesting season surveys, artificial WBO burrows will be installed at a ratio of 5:1 to replace each identified WBO burrow in the Project area that is destroyed during passive relocation. These burrows will be installed in WBO suitable habitat within the compensation lands identified in Figures 2 and 3. The specific location of each burrow enhancement site or artificial burrow will be determined after WBO surveys of the compensation lands identify suitable locations for placement of artificial burrows and establish a baseline for WBO use in the compensation lands. WBO surveys of the compensation lands will be conducted concurrently with surveys of the Project area prior to the WBO nesting season and prior to ground disturbance or heavy equipment staging only if WBO are detected within the Project area.

Artificial burrows will be designed to maximize their suitability and effectiveness. If improperly designed, an artificial burrow may attract predators; fill with rainwater, dirt, or debris; or fail to provide adequate cover. Figures 4 and 5 depict examples of artificial burrows that will be installed within the compensation lands. Two different WBO artificial burrow designs are provided for flexibility based on habitat, vegetation, and topographical characteristics within the compensation lands. One design (Figure 4) depicts an artificial burrow that may be installed in a hillside or other location where topographical relief provides suitable habitat for WBO. The second design (Figure 5) depicts an artificial burrow with a mima-mound component that may be more suitable in flat terrain, but with vegetation. The elevated mound on top of the burrow allows WBO to have suitable visual coverage from predators. The CPM and DB will decide the final locations of the artificial burrows and approve the specific design of artificial burrow to be used.

Prior to ground disturbance at the artificial burrow installation site, surveys for other sensitive species (e.g., desert tortoise, sensitive plants) may be required to verify that the construction of artificial burrows at the relocation site will not adversely impact those species. Installation of artificial burrows will be conducted in a manner to minimize impacts to desert tortoise and Mohave ground squirrel habitat.

Artificial burrow installation will be led by the DB and staffed by qualified wildlife biologists. Summaries of the identified areas will be submitted to and approved by CDFG, USFWS, and the CEC CPM prior to the initiation of passive relocation efforts. A description of activities at the artificial burrow and relocation site will be included in the addendum to the final Burrowing Owl Monitoring and Mitigation Plan.

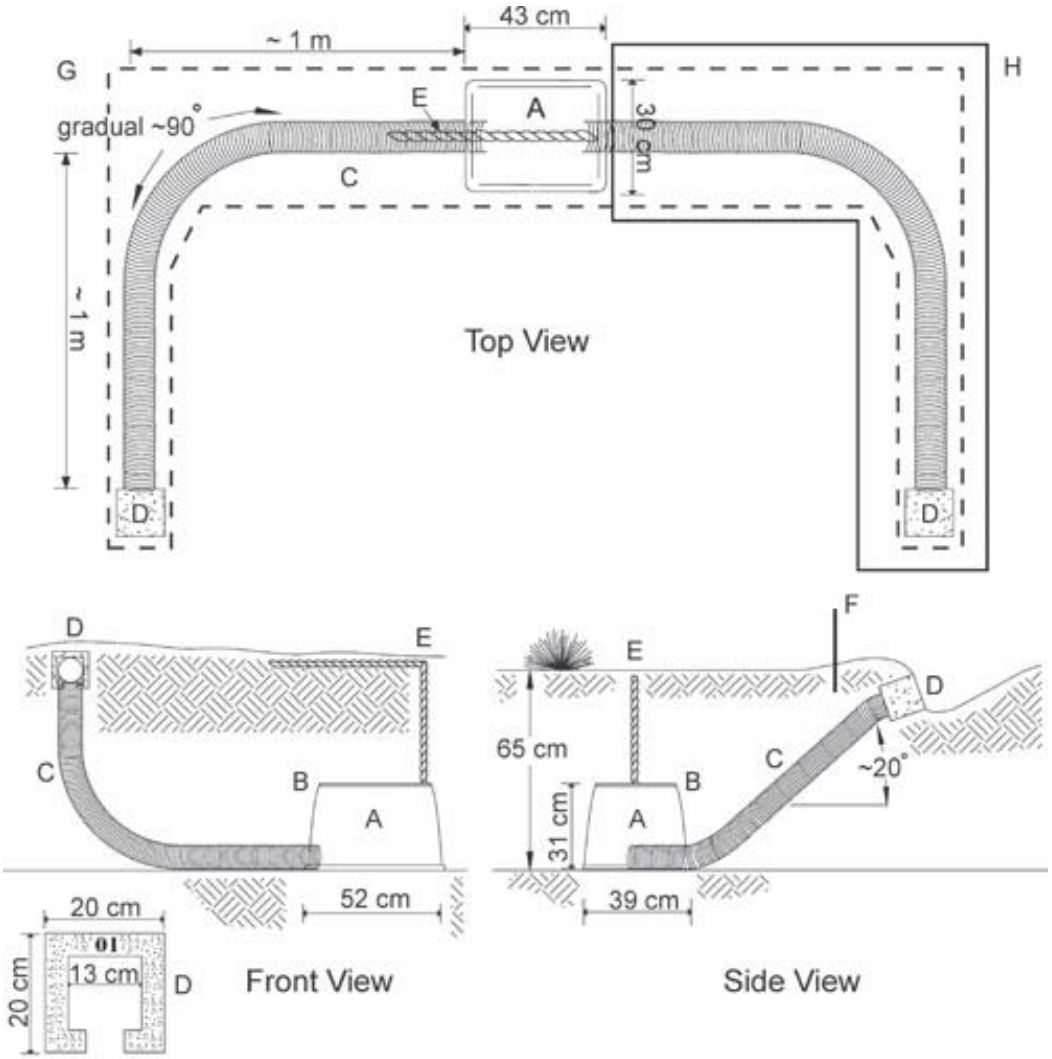

A - Plastic irrigation valve box, 48 cm long x 35 cm wide x 27 cm high (inside dimensions)
B - Removable lid
C - Ca. 2 m of 10-cm diameter perforated flexible plastic pipe
D - 20 x 20 x 15 cm hollow concrete block
E - Plastic rope or chain marking location of nest chamber on ground surface
F - 0.5 m perch post (optional)
G - Excavation footprint for installation – – –
H - Optional second entrance

Not to Scale

Figure 4
Artificial Burrowing Owl Burrow Design A

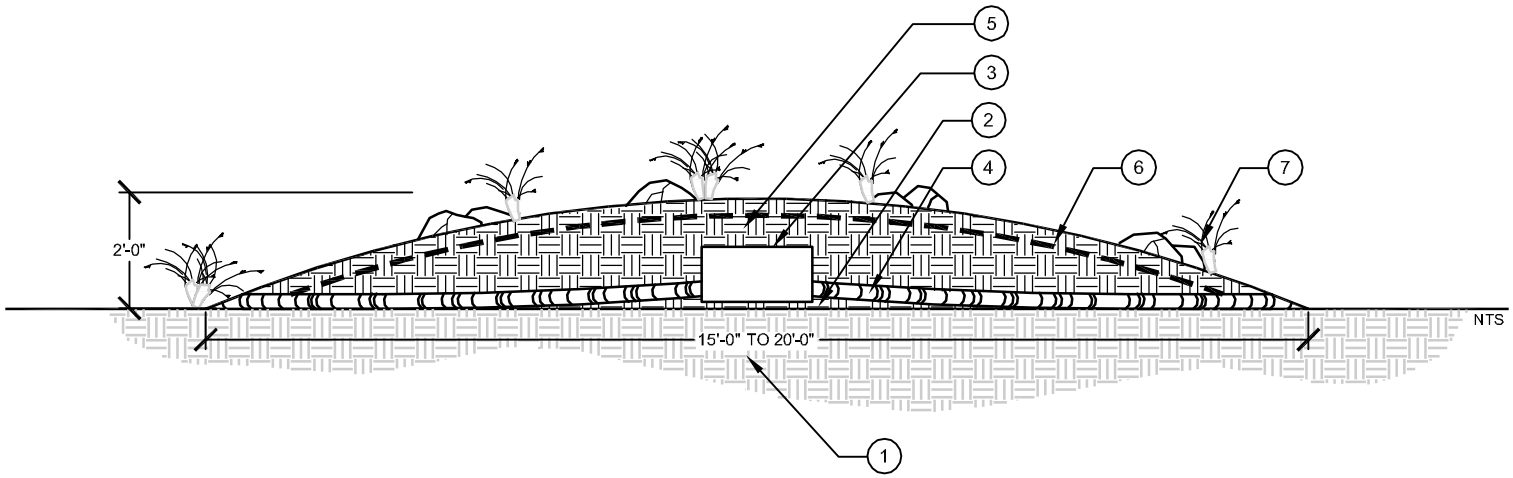

LEGEND

1. NATIVE SOIL HORIZONS (TOPSOIL & CLAY PAN)
2. 2" - 3" ADDITIONAL TOPSOIL UNDER IRRIGATION BOX
3. PLASTIC IRRIGATION VALVE BOX APPROXIMATELY 2'x1.5'x1'
4. CORRUGATED PLASTIC PIPE (6" DIAMETER) ABOVE CLAY PAN TO PREVENT FLOODING
5. MOUND OF SOIL (APPROXIMATELY 20 - 25 CUBIC YARDS)
6. GEO-MESH COVERING MOUND TO DETER PREDATION APPROXIMATELY 4" - 6" BELOW TOPSOIL HORIZON OF MOUND SMALL HOLES CUT IN MESH TO ACCOMMODATE PLANT MATERIAL
7. LANDSCAPING CONSISTING OF LOW GROWING PLANTS AND ROCKS

Not to Scale

Figure 5
Artificial Burrowing Owl Burrow Design B

In addition, arrangements will be made for repairs to be completed for any damage to artificial burrows observed during spring and winter visits. Surveys of the artificial burrows will be conducted two times in the spring and two times in the winter following eviction. The second survey within a season will be conducted within 30 days of the first survey. Surveys will continue for 2 years after installation of artificial burrows to encompass a total of four spring and four winter surveys. Monitoring information will also be included in the Project's Annual Compliance Report.

2.4 PRECONSTRUCTION SURVEYS

Preactivity surveys and associated passive relocation activities meet the requirements of a preconstruction survey for any ground-disturbing activities occurring within 30 days following completion of passive relocation activities. Otherwise, a preconstruction WBO survey is required, per BIO-13, in the Project Disturbance Area. This is necessary because it is possible for fossorial mammals to enter the Project Disturbance Area and establish burrows in the areas cleared during the preactivity survey if it is left idle. In this event, WBO may occupy those newly established burrows. Any necessary preconstruction surveys will follow CBOC Phase II burrow survey protocols (see Section 2.1 for specific protocol requirements). If passive relocation has already occurred, this survey will serve to document that burrows excavated during passive relocation continue to be unoccupied by WBO and no newly established WBO-occupied or WBO-suitable burrows are available for WBO occupation in the Project Disturbance Area. This survey will be staffed by qualified wildlife biologists. In the event any WBO-occupied burrows are observed during the preconstruction survey, they will be passively relocated. During the nonbreeding season, WBO can be passively relocated as described in Section 2.2, above.

If WBO are found occupying a burrow within 160 feet of the Project Disturbance Area during the breeding season (February 1 through August 31), a 250-foot buffer will be flagged surrounding the occupied burrow per CBOC guidelines. Exclusion fencing will be installed and work activity will remain outside of the fenced area until a DB determines the burrow is no longer occupied (e.g., juveniles are foraging independently and are capable of independent survival). Signs will be posted in English and Spanish at the fence line indicating no entry or disturbance is permitted within the fenced buffer. In addition, at least 10 days prior to the start of any activities in the Project Disturbance Area, the DB will provide to the CPM documentation indicating that nondisturbance buffer fencing has been installed. This documentation will include a description of the burrow, summary of the occupants of the burrow, account of the surrounding habitat conditions, a photograph of the burrow, and latitude/longitude coordinates for the burrow.

In the event any WBO-suitable burrows with no sign of occupation are found (e.g., no wash, pellets, feathers) during the preconstruction survey, such burrows will be remotely investigated to ensure WBO and other wildlife do not occupy the burrow (e.g., with a fiber-optic scope camera), excavated with hand tools using flexible pipe to allow wildlife to escape, and refilled to prevent occupation by WBO. The results of each preconstruction survey will be included in the next monthly report on the implementation of WBO avoidance and minimization measures to the CPM, CDFG, and USFWS. This information will also be included in the Project's Annual Compliance Report.

This page intentionally left blank.

3.0 MONITORING

3.1 MONITORING PASSIVE RELOCATION AREAS LEFT IDLE FOR MORE THAN 30 DAYS

If work in the Project Disturbance Area is scheduled to commence more than 30 days after passive relocation activities are complete, monitoring of that area will occur until disturbance commences. The frequency of the monitoring will depend on the abundance of fossorial mammal activity and the friability of soils in the passive relocation area. This monitoring will reduce the likelihood that other resident wildlife species are able to reexcavate burrows, allowing WBO to reoccupy those burrows. Results of this monitoring will be included in the Project's Annual Compliance Report.

3.2 NESTING SEASON OCCUPIED BURROW MONITORING

If construction activities in the Project Disturbance Area occur within 160 feet of an occupied burrow during the nesting season (February 1 through August 31), the DB or a Biological Monitor will monitor to determine whether these activities have potential to adversely affect nesting efforts, and, as necessary, will make recommendations for adaptive management measures to minimize or avoid such disturbance.

Additional monitoring and adaptive management measures to prevent disturbance to nesting birds from construction-related activities will be employed as determined necessary by the DB or a Biological Monitor and CPM. Any adaptive management measures will be determined in consultation with the CPM, CDFG, and USFWS. Triggers for adaptive management will be evidence of Project-related disturbance to nesting owls such as agitation behavior (displacement, avoidance, and defense), increased vigilance behavior at burrow sites, changes in foraging and feeding behavior, or nest site abandonment.

Monitoring will occur each month and findings will be included in the monthly report on the implementation of WBO avoidance and minimization measures to the CPM, CDFG, and USFWS for the duration of construction. This information will also be included in the Project's Annual Compliance Report.

3.3 ARTIFICIAL BURROW AND RELOCATION AREA MONITORING

Post-relocation monitoring will include two spring and two winter censuses of the relocation site to determine if burrowing owls are using natural or artificial burrows within the relocation area. The second survey within a season will be conducted within 30 days of the first survey for that season. Monitoring will occur for 2 years. Maintenance of artificial burrows will occur three to four times during the year immediately following relocation, as necessary, to ensure boxes are usable for the breeding and non-breeding seasons.

During spring and winter visits to the WBO artificial burrow and relocation site to occur for a duration of 2 years, the DB or a Biological Monitor will record observations of relocated WBO and/or occurrences of migrating or other local WBO using the artificial burrows and relocation site, evidence of known predators or humans visiting or disturbing the site, and any other pertinent data gathered through the monitoring. Findings will be included in the report on the implementation of WBO avoidance and minimization measures to the CPM, CDFG, and USFWS for the duration of construction. This information will also be included in the Project's Annual Compliance Report.

If the burrowing owls do not use the relocation area, remedial measures will be developed by the DB in consultation with the CPM and CDFG.

4.0 REPORTING

An annual report will be submitted to CEC, CDFG, and USFWS following each breeding season for 2 years post-relocation. The annual reports will include the date when passive relocation efforts began, the date of burrow excavations, findings, and dates of initiation of construction activities. Additionally, any injuries, mortality, or other unforeseen circumstances will be reported to all resource agencies within 24 hours.

Reports will include the following data:

- Project name, locations, and all pertinent information pertaining to the origin site;
- Known predators or humans visiting or disturbing the site;
- Dates of removal of one-way exclusion doors and the collapse of unoccupied burrows;
- Monitoring results;
- Any other pertinent data gathered through the exclusion, passive relocation efforts, and post-relocation monitoring; and
- Remedial measures taken.

This page intentionally left blank.

5.0 WESTERN BURROWING OWL COMPENSATION LANDS

As discussed above, the Applicant owns approximately 647 acres of habitat west of the Project area. Within this parcel, the Applicant proposes to compensate for impacts to sensitive resources, including desert tortoise, Mohave ground squirrel, and WBO, and provide the locations for artificial burrows for WBO, within an approximately 118.2-acre compensation site (Figures 2 and 3). The Applicant has assessed the proposed compensation site as supporting biological resources that include components of suitable WBO habitat (AECOM 2010). A winter season WBO survey of the compensation site will identify if the site is currently occupied by WBO and identify locations for placement of artificial burrows. It is anticipated that this 118.2 acres would fully mitigate potential Project impacts to WBO.

As specified in BIO-13 of the COCs, offsite mitigation for impacts to the occupied WBO habitat will follow CBOC guidelines. The guidelines specify that 9.75 acres of preserved offsite habitat is required to mitigate for one WBO or WBO pair if the habitat is occupied by WBO, or 19.5 acres of preserved offsite habitat if the habitat is unoccupied by WBO. Based on the results of previous WBO surveys of the Project area and surrounding buffers, it is anticipated that the 118.2 acres will be sufficient to provide compensation for the pairs (or individuals assumed to be pairs) of WBO that have been or may be identified within the Project area or buffers. Per the CBOC and CDFG mitigation guidelines, a preconstruction survey will be conducted to determine the number of WBO pairs and the amount of compensation land that will be required to be protected.

The compensatory habitat will be managed for the benefit of WBOs with the following specific goals:

a. Maintenance of the functionality of artificial and natural burrows; and

b. Weed management through the minimization of occurrence of weed species at less than 10% cover of the shrub and herb layers. The weed species managed are those considered “moderate” or “high” threat to California wildlands (as defined by the California Invasive Plant Council [CAL-IPC 2006] and noxious weeds rated “A” or “B” by the California Department of Food and Agriculture and any federally rated pest plants [CDFA 2010]).

This page intentionally left blank.

6.0 REFERENCES

AECOM

2010 Abengoa Mojave Solar Project Compensatory Mitigation Site Details Letter Report. April.

California Burrowing Owl Consortium (CBOC)

1993 Burrowing Owl Survey Protocols and Mitigation Guidelines. Sacramento, California.

California Department of Fish and Game (CDFG)

1995 Staff report on burrowing owl mitigation. Unpublished report.

California Department of Food and Agriculture (CDFA)

2010 Pest Ratings of Noxious Weed Species and Noxious Weed Seed. State of California Department of Food and Agriculture, Division of Plant Health & Pest Prevention Services. January.

California Invasive Plant Council (Cal-IPC)

2006 California Invasive Plant Inventory. Cal-IPC Publication 2006-02. California Invasive Plant Council: Berkeley, California. Available at www.cal-ipc.org.

California Energy Commission (CEC)

2010 Abengoa Mojave Solar Project: Commission Decision. CEC-800-2010-008 - CMF, Docket Number 09-AFC-5

Clark, H. O., Jr., and D. L. Plumpton

2005 A Simple One-Way Door Design for Passive Relocation of Western Burrowing Owls. California Fish and Game 91:286-289. Available at http://www.docstoc.com/docs/1660512/Clark-HO-Jr-and-DL-Plumpton-2005-A-simple-one-way-door-design-for-passive-relocation-of-western-burrowing-owls--California-Fish-and-Game-91286-289.

EDAW

2007 Harper Lake Solar Project Burrowing Owl Presence/Absence Survey, San Bernardino County, California. December.

2009 Report Summarizing Results of the Proposed Harper Lake Solar Project Burrowing Owl Presence/Absence Surveys. January.

Mojave Solar, LLC (MSLLC)
2009 Mojave Solar Project Application for Certification. Volumes 1 through 3. July.

Trulio, Lynne A.
1995 Passive Relocation: A Method to Preserve Burrowing Owls on Disturbed Sites. *Journal of Field Ornithology* 66(11): 99–106.

APPENDIX A
BURROWING OWL SURVEY PROTOCOL AND MITIGATION GUIDELINES

BURROWING OWL SURVEY PROTOCOL AND MITIGATION GUIDELINES

Prepared by:

The California Burrowing Owl Consortium

April 1993

INTRODUCTION

The California Burrowing Owl Consortium developed the following Survey Protocol and Mitigation Guidelines to meet the need for uniform standards when surveying burrowing owl *(Speotyto cunicularia)* populations and evaluating impacts from development projects. The California Burrowing Owl Consortium is a group of biologists in the San Francisco Bay area who are interested in burrowing owl conservation. The following survey protocol and mitigation guidelines were prepared by the Consortium's Mitigation Committee. These procedures offer a decision-making process aimed at preserving burrowing owls in place with adequate habitat.

California's burrowing owl population is clearly in peril and if declines continue unchecked the species may qualify for listing. Because of the intense pressure for development of open, flat grasslands in California, resource managers frequently face conflicts between owls and development projects. Owls can be affected by disturbance and habitat loss, even though there may be no direct impacts to the birds themselves or their burrows. There is often inadequate information about the presence of owls on a project site until ground disturbance is imminent. When this occurs there is usually insufficient time to evaluate impacts to owls and their habitat. The absence of standardized field survey methods impairs adequate and consistent impact assessment during regulatory review processes, which in turn reduces the possibility of effective mitigation.

These guidelines are intended to provide a decision-making process that should be implemented wherever there is potential for an action or project to adversely affect burrowing owls or the resources that support them. The process begins with a four-step survey protocol to document the presence of burrowing owl habitat, and evaluate burrowing owl use of the project site and a surrounding buffer zone. When surveys confirm occupied habitat, the mitigation measures are followed to minimize impacts to burrowing owls, their burrows and foraging habitat on the site. These guidelines emphasize maintaining burrowing owls and their resources in place rather than minimizing impacts through displacement of owls to an alternate site.

Each project and situation is different and these procedures may not be applicable in some circumstances. Finally, these are not strict rules or requirements that must be applied in all situations. They are guidelines to consider when evaluating burrowing owls and their habitat, and they suggest options for burrowing owl conservation when land use decisions are made.

Section 1 describes the four phase Burrowing Owl Survey Protocol. Section 2 contains the Mitigation Guidelines. Section 3 contains a discussion of various laws and regulations that protect burrowing owls and a list of references cited in the text.

We have submitted these documents to the California Department of Fish and Game (CDFG) for review and comment. These are untested procedures and we ask for your comments on improving their usefulness.

SECTION 1 BURROWING OWL SURVEY PROTOCOL

PHASE I: HABITAT ASSESSMENT

The first step in the survey process is to assess the presence of burrowing owl habitat on the project site including a 150-meter (approx. 500 ft.) buffer zone around the project boundary (Thomsen 1971, Martin 1973).

Burrowing Owl Habitat Description
Burrowing owl habitat can be found in annual and perennial grasslands, deserts, and scrublands characterized by low-growing vegetation (Zarn 1974). Suitable owl habitat may also include trees and shrubs if the canopy covers less than 30 percent of the ground surface. Burrows are the essential component of burrowing owl habitat: both natural and artificial burrows provide protection, shelter, and nests for burrowing owls (Henny and Blus 1981). Burrowing owls typically use burrows made by fossorial mammals, such as ground squirrels or badgers, but also may use man-made structures, such as cement culverts; cement, asphalt, or wood debris piles; or openings beneath cement or asphalt pavement.

Occupied Burrowing Owl Habitat
Burrowing owls may use a site for breeding, wintering, foraging, and/or migration stopovers. Occupancy of suitable burrowing owl habitat can be verified at a site by an observation of at least one burrowing owl, or, alternatively, its molted feathers, cast pellets, prey remains, eggshell fragments, or excrement at or near a burrow entrance. Burrowing owls exhibit high site fidelity, reusing burrows year after year (Rich 1984, Feeney 1992). A site should be assumed occupied if at least one burrowing owl has been observed occupying a burrow there within the last three years (Rich 1984).

The Phase II burrow survey is required if burrowing owl habitat occurs on the site. If burrowing owl habitat is not present on the project site and buffer zone, the Phase II burrow survey is not necessary. A written report of the habitat assessment should be prepared (Phase IV), stating the reason(s) why the area is not burrowing owl habitat.

PHASE II: BURROW SURVEY

1. A survey for-burrows and owls should be conducted by walking through suitable habitat over the entire project site and in areas within 150 meters (approx 500 ft.) of the project impact zone. This 150-meter buffer zone is included to account for adjacent burrows and foraging habitat outside the project area and impacts from factors such as noise and vibration due to heavy equipment which could impact resources outside the project area.

2. Pedestrian survey transects should be spaced to allow 100 percent visual coverage of the ground surface. The distance between transect center lines should be no more than 30 meters (approx. 100 ft.), and should be reduced to account for differences in terrain, vegetation density, and ground surface visibility. To efficiently survey projects larger than 100 acres, it is recommended that two or more surveyors conduct concurrent surveys. Surveyors should maintain a minimum distance of 50 meters (approx. 160 ft.) from any owls or occupied burrows. It is important to minimize disturbance near occupied burrows during all seasons.

3. If burrows or burrowing owls are recorded on the site, a map should be prepared of the burrow concentration areas. A breeding season survey and census (Phase III) of burrowing owls is the next step required.

4. Prepare a report (Phase IV) of the burrow survey stating whether or not burrows are present.

5. A preconstruction survey may be required by project-specific mitigations no more than 30 days prior to ground disturbing activity.

PHASE III: BURROWING OWL SURVEYS, CENSUS AND MAPPING

If the project site contains burrows that could be used by burrowing owls, then survey efforts should be directed towards determining owl presence on the site. Surveys in the breeding season are required to describe if, when, and how the site is used by burrowing owls. If no owls are observed using the site during the breeding season, a winter survey is required.

Survey Methodology

A complete burrowing owl survey consists of four site visits. During the initial site visit examine burrows for owl sign and map the locations of occupied burrows. Subsequent observations should be conducted from as many fixed points as necessary to provide visual coverage of the site using spotting scopes or binoculars. It is important to minimize disturbance near occupied burrows during all seasons. Site visits must be repeated on four separate days. Conduct these visits from two hours before sunset to one hour after or from one hour before to two hours after sunrise. Surveys should be conducted during weather that is conducive to observing owls outside their burrows. Avoid surveys during heavy rain, high winds (> 20 mph), or dense fog.

Nesting Season Survey. The burrowing owl nesting season begins as early as February 1 and continues through August 31 (Thomsen 1971, Zam 1974). The timing of nesting activities may vary with latitude and climatic conditions. If possible, the nesting season survey should be conducted during the peak of the breeding season, between April 15 and July 15. Count and map all burrowing owl sightings, occupied burrows, and burrows with owl sign. Record numbers of pairs and juveniles, and behavior such as courtship and copulation. Map the approximate territory boundaries and foraging areas if known.

Survey for Winter Residents (non-breeding owls). Winter surveys should be conducted between December 1 and January 31, during the period when wintering owls are most likely to be present. Count and map all owl sightings, occupied burrows, and burrows with owl sign.

Surveys Outside the Winter and Nesting Seasons. Positive results, (i.e., owl sightings)- outside of the above survey periods would be adequate to determine presence of owls on site. However, results of these surveys may be inadequate for mitigation planning because the numbers of owls and their pattern of distribution may change during winter and nesting seasons. Negative results during surveys outside the above periods are not conclusive proof that owls do not use the site.

Preconstruction Survey. A preconstruction survey may be required by project-specific mitigations and should be conducted no more than 30 days prior to ground disturbing activity.

PHASE IV: RESOURCE SUMMARY, WRITTEN REPORT

A report should be prepared for CDFG that gives the results of each Phase of the survey protocol, as outlined below.

Phase I: Habitat Assessment

1. Date and time of visit(s) including weather and visibility conditions; methods of survey.

2. Site description including the following information: location, size, topography, vegetation communities, and animals observed during visit(s).

3. An assessment of habitat suitability for burrowing owls and explanation.

4. A map of the site.

Phase II: Burrow Survey

1. Date and time of visits including weather and visibility conditions; survey methods including transect spacing.

2. A more detailed site description should be made during this phase of the survey protocol including a partial plant list of primary vegetation, location of nearest freshwater (on or within one mile of site), animals observed during transects.

3. Results of survey transects including a map showing the location of concentrations of burrow(s) (natural or artificial) and owl(s), if present.

Phase III: Burrowing Owl Surveys, Census and Mapping

1. Date and time of visits including weather and visibility conditions; survey methods including transect spacing.

2. Report and map the location of all burrowing owls and owl sign. Burrows occupied by owl(s) should be mapped indicating the number of owls at each burrow. Tracks, feathers, pellets, or other items (prey remains, animal scat) at burrows should also be reported.

3. Behavior of owls during the surveys should be carefully recorded (from a distance) and reported. Describe and map areas used by owls during the surveys. Although not required, all behavior is valuable to document including feeding, resting, courtship, alarm, territorial, parental, or juvenile behavior.

4. Both winter and nesting season surveys should be summarized. If possible include information regarding productivity of pairs, seasonal pattern of use, and include a map of the colony showing territorial boundaries and home ranges.

5. The historical presence of burrowing owls on site should be documented, as well as the source of such information (local bird club, Audubon society, other biologists, etc.).

Burrowing: Owl Survey Protocol

April 1993

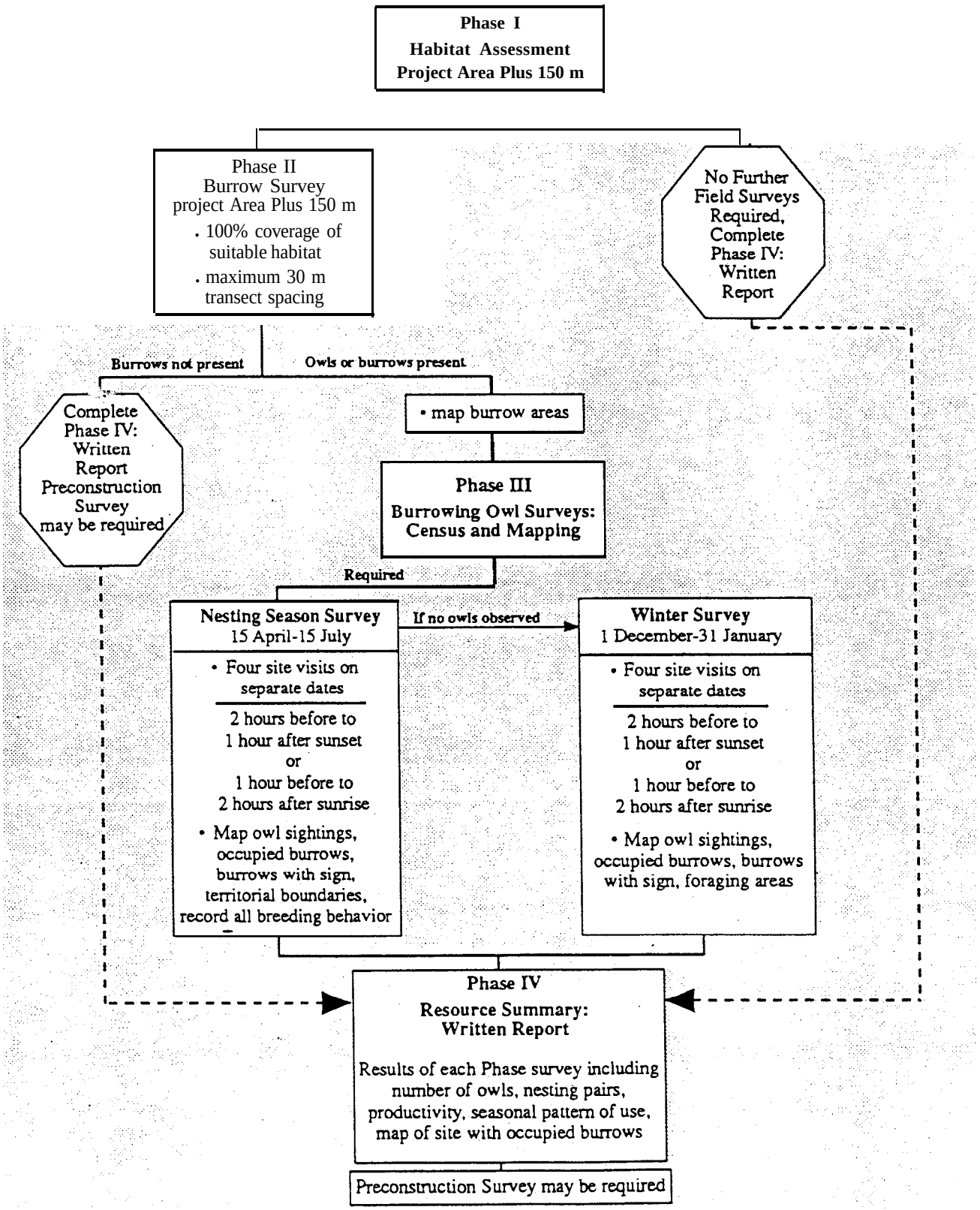

Figure 1.

SECTION 2 BURROWING OWL MITIGATION GUIDELINES

The objective of these mitigation guidelines is to minimize impacts to burrowing owls and the resources that support viable owl populations. These guidelines are intended to provide a decision-making process that should be implemented wherever there is potential for an action or project to adversely affect burrowing owls or their resources. The process begins with a four-step survey protocol (see *Burrowing Owl Survey Protocol)* to document the presence of burrowing owl habitat, and evaluate burrowing owl use of the project site and a surrounding buffer zone. When surveys confirm occupied habitat, the mitigation measures described below are followed to minimize impacts to burrowing owls, their burrows and foraging habitat on the site. These guidelines emphasize maintaining burrowing owls and their resources in place rather than minimizing impacts through displacement of owls to an alternate site.

Mitigation actions should be carried out prior to the burrowing owl breeding season, generally from February 1 through August 31 (Thomsen 1971, Zarn 1974). The timing of nesting activity may vary with latitude and climatic conditions. Project sites and buffer zones with suitable habitat should be resurveyed to ensure no burrowing owls have occupied them in the interim period between the initial surveys and ground disturbing activity. Repeat surveys should be conducted not more than 30 days prior to initial ground disturbing activity.

DEFINITION OF IMPACTS

1. Disturbance or harassment within 50 meters (approx. 160 ft.) of occupied burrows.

2. Destruction of burrows and burrow entrances. Burrows include structures such as culverts, concrete slabs and debris piles that provide shelter to burrowing owls.

3. Degradation of foraging habitat adjacent to occupied burrows.

GENERAL CONSIDERATIONS

1. Occupied burrows should not be disturbed during the nesting season, from February 1 through August 31, unless the Department of Fish and Game verifies that the birds have not begun egg-laying and incubation or that the juveniles from those burrows are foraging independently and capable of independent survival at an earlier date.

2. A minimum of 6.5 acres of foraging habitat, calculated on a 100-m (approx. 300 ft.) foraging radius around the natal burrow, should be maintained per pair (or unpaired resident single bird) contiguous with burrows occupied within the last three years (Rich 1984, Feeney 1992). Ideally, foraging habitat should be retained in a long-term conservation easement.

3. When destruction of occupied burrows is unavoidable, burrows should be enhanced (enlarged or cleared of debris) or created (by installing artificial burrows) in a ratio of 1:1 in adjacent suitable habitat that is contiguous with the foraging habitat of the affected owls.

4. If owls must be moved away from the disturbance area, passive relocation (see below) is preferable to trapping. A time period of at least one week is recommended to allow the owls to move and acclimate to alternate burrows.

5. The mitigation committee recommends monitoring the success of mitigation programs as required in Assembly Bill 3180. A monitoring plan should include mitigation success criteria and an annual report should be submitted to the California Department of Fish and Game.

AVOIDANCE

Avoid Occupied Burrows

No disturbance should occur within 50 m (approx. 160 ft.) of occupied burrows during the non-breeding Season of September 1 through January 31 or within 75 m (approx. 250 ft.) during the breeding Season of February 1 through August 31. Avoidance also requires that a minimum of 6.5 acres of foraging habitat be preserved contiguous with occupied burrow sites for each pair of breeding burrowing owls (with or without dependent young) or single unpaired resident bird (Figure 2).

MITIGATION FOR UNAVOIDABLE IMPACTS

On-site Mitigation

On-site passive relocation should be implemented if the above avoidance requirements cannot be met. Passive relocation is defined as encouraging owls to move from occupied burrows to alternate natural or artificial burrows that are beyond 50 m from the impact zone and that are within or contiguous to a minimum of 6.5 acres of foraging habitat for each pair of relocated owls (Figure 3). Relocation of owls should only be implemented during the non-breeding season. On-site habitat should be preserved in a conservation easement and managed to promote burrowing owl use of the site.

Owls should be excluded from burrows in the immediate impact zone and within a 50 m (approx. 160 ft.) buffer zone by installing one-way doors in burrow entrances: One-way doors should be left in place 48 hours to insure owls have left the burrow before excavation. One alternate natural or artificial burrow should be provided for each burrow that will be excavated in the project impact zone. The project area should be monitored daily for one week to confirm owl use of alternate burrows before excavating burrows in the immediate impact zone. Whenever possible, burrows should be excavated using hand tools and refilled to prevent reoccupation. Sections of flexible plastic pipe or burlap bags should be inserted into the tunnels

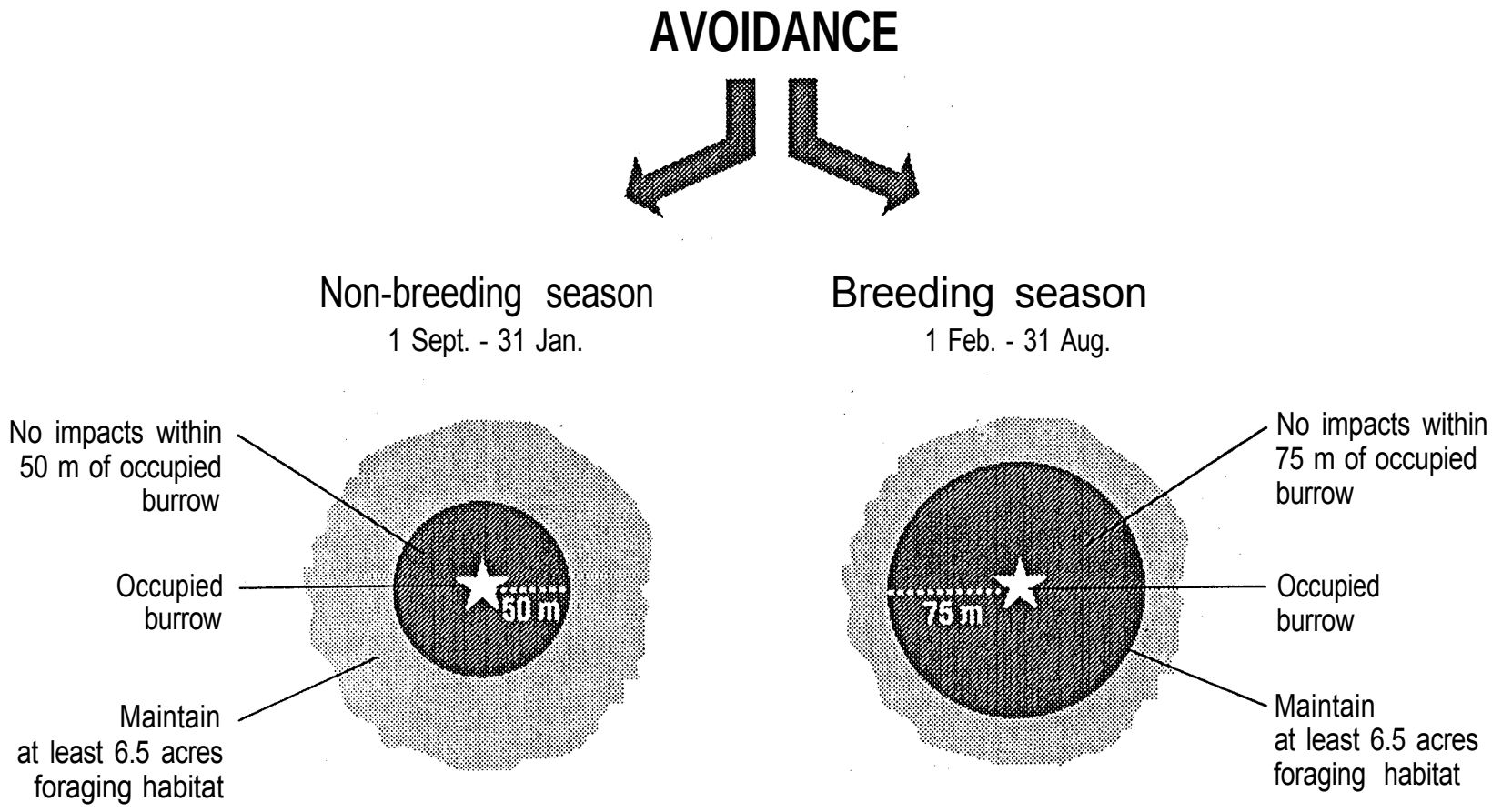

Figure 2. Burrowing owl mitigation guidelines.

ON-SITE MITIGATION
IF AVOIDANCE NOT MET

(More than 6.5 acres suitable habitat available)

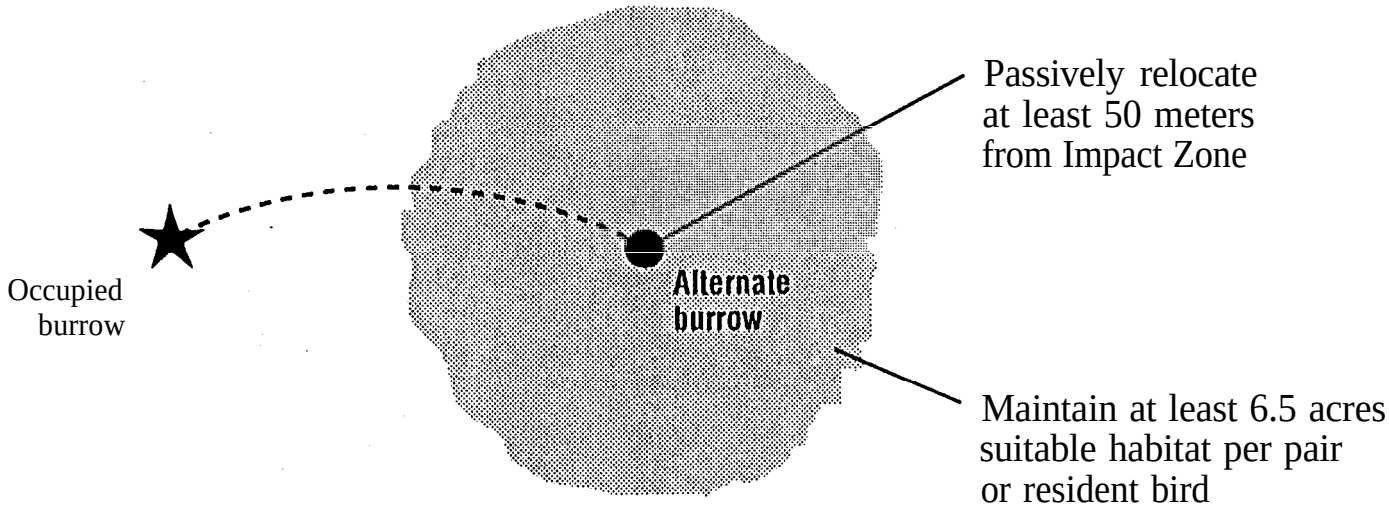

Figure 3. Burrowing owl mitigation guidelines.

during excavation to maintain an escape route for any animals inside the burrow.

Off-site Mitigation

If the project will reduce suitable habitat on-site below the threshold level of 6.5 acres per relocated pair or single bird, the habitat should be replaced off-site. Off-site habitat must be suitable burrowing owl habitat, as defined in the *Burrowing Owl Survey Protocol*, and the site approved by CDFG. Land should be purchased and/or placed in a conservation easement in perpetuity and managed to maintain suitable habitat. Off-site mitigation should use one of the following ratios:

1. Replacement of occupied habitat with occupied habitat: 1.5 times 6.5 (9.75) acres per pair or single bird.

2. Replacement of occupied habitat with habitat contiguous to currently occupied habitat: 2 times 6.5 (13.0) acres per pair or single bird.

3. Replacement of occupied habitat with suitable unoccupied habitat: 3 times 6.5 (19.5) acres per pair or single bird.

SECTION 3 LEGAL STATUS

The burrowing owl is a migratory bird species protected by international treaty under the Migratory Bird Treaty Act (MBTA) of 1918 (16 U.S.C. 703-711). The MBTA makes it unlawful to take, possess, buy, sell, purchase, or barter, any migratory bird listed in 50 C.F.R. Part 10, including feathers or other parts, nests, eggs, or products, except as allowed by implementing regulations (50 C.F.R. 21). Sections 3503, 3503.5, and 3800 of the California Department of Fish and Game Code prohibit the take, possession, or destruction of birds, their nests or eggs. Implementation of the take provisions requires that project-related disturbance at active nesting territories be reduced or eliminated during critical phases of the nesting cycle (March 1 - August 15, annually). Disturbance that causes nest abandonment and/or loss of reproductive effort (e.g., killing or abandonment of eggs or young) or the loss of habitat upon which the birds depend is considered "taking" and is potentially punishable by fines and/or imprisonment. Such taking would also violate federal law protecting migratory birds (e.g., MBTA).

The burrowing owl is a Species of Special Concern to California because of declines of suitable habitat and both localized and statewide population declines. Guidelines for the Implementation of the California Environmental Quality Act (CEQA) provide that a species be considered as endangered or "rare" regardless of appearance on a formal list for the purposes of the CEQA (Guidelines, Section 15380, subsections b and d). The CEQA requires a mandatory findings of significance if impacts to threatened or endangered species are likely to occur (Sections 21001(c), 21083. Guidelines 15380, 15064, 15065). Avoidance or mitigation must be presented to reduce impacts to less than significant levels.

CEQA AND SUBDIVISION MAP ACT

CEQA Guidelines Section 15065 directs that a mandatory finding of significance is required for projects that have the potential to substantially degrade or reduce the habitat of, or restrict the range of a threatened or endangered species. CEQA requires agencies to implement feasible mitigation measures or feasible alternatives identified in EIR's for projects which will otherwise cause significant adverse impacts (Sections 21002, 21081, 21083; Guidelines, sections 15002, subd. (a)(3), 15021, subd. (a)(2), 15091, subd. (a).).

To be legally adequate, mitigation measures must be capable of "avoiding the impact altogether by not taking a certain action or parts of an action"; "minimizing impacts by limiting the degree or magnitude of the action and its implementation"; "rectifying the impact by repairing, rehabilitating or restoring the impacted environment"; "or reducing or eliminating the impact over time by preservation and maintenance operations during the life of the action." (Guidelines, Section 15.370).

Section 66474 (e) of the Subdivision Map Act states "a legislative body of a city or county shall deny approval of a tentative map or parcel map for which a tentative map was not required, if

it makes any of the following findings:... (e) that the design of the subdivision or the proposed improvements are likely to cause substantial environmental damage or substantially and avoidably injure fish and wildlife or their habitat". In recent court cases, the court upheld that Section 66474(e) provides for environmental impact review separate from and independent of the requirements of CEQA (Topanga Assn. for a Scenic Community v. County of Los Angeles, 263 Cal. Rptr. 214 (1989).). The finding in Section 66174 is in addition to the requirements for the preparation of an EIR or Negative Declaration.

LITERATURE CITED

Feeney, L. 1992. Site fidelity in burrowing owls. Unpublished paper presented to Raptor Research Annual Meeting, November 1992. Seattle, Washington.

Haug, E. A. and L. W. Oliphant. 1990. Movements, activity patterns, and habitat use of burrowing owls in Saskatchewan. J. Wildlife Management 54:27-35.

Henny, C. J. and L. J. Blus. 1981. Artificial burrows provide new insight into burrowing owl nesting biology. Raptor Research 15:82-85.

Martin, D. J. 1973. Selected aspects of burrowing owl ecology and behavior. Condor 75:446-456.

Rich, T. 1984. Monitoring burrowing owl populations: Implications of burrow re-use. Wildlife Society Bulletin 12: 178- 180.

Thomsen, L. 1971. Behavior and ecology of burrowing owls on the Oakland Municipal Airport. Condor 73: 177-192.

Zam, M. 1974. Burrowing owl. U. S. Department of Interior, Bureau of Land Management. Technical Note T-N 250. Denver, Colorado. 25pp.

APPENDIX N

CULTURAL RESOURCES STUDY

CONFIDENTIAL APPENDIX

ON FILE WITH BUREAU OF LAND MANAGEMENT

CONTACT: Jim Shearer, BLM Archaeologist, 760.252.6034

APPENDIX O

SOCIOECONOMICS

Appendix O: Socioeconomics

Table O-1: Employment Growth by Occupation (Most Job Openings) - San Bernardino, Los Angeles, and Kern Counties, 2006-2016

San Bernardino		Los Angeles		Kern	
Occupation	**Number of New Jobs Projected**	**Occupation**	**Number of New Jobs Projected**	**Occupation**	**Number of New Jobs Projected**
Retail Salespersons	24,360	Retail Salespersons	63,140	Farmworkers and Laborers	14,270
Cashiers	20,170	Personal and Home Care Aides	51,810	Cashiers	3,820
Waiters and Waitresses	15,340	Cashiers	48,060	Retail Salespersons	3,760
Laborers and Freight, Stock, and Material Movers	13,460	Office Clerks	35,820	Elementary School Teachers (Except Special Education)	2,160
Combined Food Preparation and Serving Workers (Including Fast Food)	12,880	Waiters and Waitresses	34,590	Laborers and Freight, Stock, and Material Movers	2,140
Elementary School Teachers (Except Special Education)	11,450	Laborers and Freight, Stock, and Material Movers	32,440	Waiters and Waitresses	2,040
Office Clerks	11,190	Customer Service Representatives	29,880	Combined Food Preparation and Serving Workers (Including Fast Food)	1,950
Personal and Home Care Aides	9,710	Registered Nurses	24,810	Truck Drivers	1,940
Customer Service Representatives	8,890	Elementary School Teachers (Except Special Education)	22,810	Office Clerks	1,730
Registered Nurses	8,380	Combined Food Preparation and Serving Workers (Including Fast Food)	21,070	Correctional Officers and Jailers	1,690

Source: California EDD, 2009.

Tables O-2 through O-4 present San Bernardino County, Los Angeles County, and Kern County employment figures for those types of skilled workers (by craft) required for construction and operation of the Project. Existing employment figures for 2006 are provided, as well as employment projections for the selected occupations for 2016.

Table O-2: Skilled Workers by Craft Required by Project - San Bernardino County

Occupational Title	Annual Average Employment		Employment Change		Average Annual Job Openings		
	2006	2016	Number	Percent	New Jobs	Net Replacements	Total
Construction Managers	4,380	5,110	730	16.7	73	68	141
Construction Workers	116,810	132,160	15,350	13.1	1,535	1,815	3,350
Carpenters	28,850	32,390	3,540	12.3	354	390	744
Cement Masons and Concrete Finishers	4,110	4,690	580	14.1	58	119	177
Construction Laborers	27,930	32,080	4,150	14.9	415	210	625
Paving, Surfacing, and Tamping Equipment Operators	630	720	90	14.3	9	13	22
Operating Engineers and Other Construction Equipment Operators	4,790	5,460	670	14.0	67	93	160
Drywall and Ceiling Tile Installers	7,570	8,310	740	9.8	74	104	178
Electricians	6,740	7,600	860	12.8	86	174	260
Painters, Construction and Maintenance	7,950	9,210	1,260	15.8	126	141	267
Plumbers, Pipefitters, and Steamfitters	4,630	5,330	700	15.1	70	96	166
Metal Workers and Plastic Workers	19,460	20,800	1,340	6.9	134	378	512
Helpers - Construction Trades	120	130	10	8.3	1	3	4
Maintenance and Repair Workers, General	11,920	13,690	1,770	14.8	177	29	206
Welders, Cutters, Solderers, and Brazers	3,960	4,640	680	17.2	68	84	152
Plant and System Operators	2,030	2,380	350	17.2	35	46	81
Power Plant Operators	310	370	60	19.4	6	11	17
Architects, Surveyors, and Cartographers	1,420	1,670	250	17.6	25	35	60
Engineering Managers	1,370	1,600	230	16.8	23	28	51
Supervisors, Construction and Extraction Workers	10,990	12,380	1,390	12.6	139	153	292
Machinists	2,630	2,960	330	12.5	33	41	74

Source: California EDD, 2009

Table O-3: Skilled Workers by Craft Required by Project - Los Angeles County

Occupational Title	Annual Average Employment		Employment Change		Average Annual Job Openings		
	2006	2016	Number	Percent	New Jobs	Net Replacements	Total
Construction Managers	10,320	11,670	1,350	13.1	135	160	295
Construction Workers	143,280	153,890	10,610	7.4	1,061	2,347	3,408
Carpenters	28,070	30,050	1,980	7.1	198	380	578
Cement Masons and Concrete Finishers	4,150	4,530	380	9.2	38	120	158
Construction Laborers	31,330	34,810	3,480	11.1	348	236	584
Paving, Surfacing, and Tamping Equipment Operators	790	870	80	10.1	8	16	24
Operating Engineers and Other Construction Equipment Operators	4,410	4,780	370	8.4	37	85	122
Drywall and Ceiling Tile Installers	8,600	8,850	250	2.9	25	118	143
Electricians	13,040	13,700	660	5.1	66	336	402
Painters, Construction and Maintenance	13,240	14,250	1,010	7.6	101	235	336
Plumbers, Pipefitters, and Steamfitters	12,090	12,900	810	6.7	81	249	330
Metal Workers and Plastic Workers	54,990	52,230	-2,760	-5.0	0	1,024	1,024
Helpers - Construction Trades	6,670	7,020	350	5.2	35	169	204
Maintenance and Repair Workers, General	30,520	32,930	2,410	7.9	241	75	316
Welders, Cutters, Solderers, and Brazers	8,410	8,890	480	5.7	48	178	226
Plant and System Operators	4,620	4,980	360	7.8	36	104	140
Power Plant Operators	320	360	40	12.5	4	11	15
Architects, Surveyors, and Cartographers	6,470	7,030	560	8.7	56	135	191
Engineering Managers	8,410	8,840	430	5.1	43	170	213
Supervisors, Construction and Extraction Workers	15,490	16,440	950	6.1	95	216	311
Machinists	10,400	10,380	-20	-0.2	0	161	161

Source: California EDD, 2009

Table O-4: Skilled Workers by Craft Required by Project - Kern County

Occupational Title	Annual Average Employment		Employment Change		Average Annual Job Openings		
	2006	2016	Number	Percent	New Jobs	Net Replacements	Total
Construction Managers	1,050	1,250	200	19.0	20	16	36
Construction Workers	19,190	21,310	2,120	11.0	212	321	533
Carpenters	2,740	3,060	320	11.7	32	37	69
Cement Masons and Concrete Finishers	990	1,100	110	11.1	11	29	40
Construction Laborers	4,860	5,570	710	14.6	71	37	108
Paving, Surfacing, and Tamping Equipment Operators	100	110	10	10.0	1	2	3
Operating Engineers and Other Construction Equipment Operators	1,500	1,570	70	4.7	7	29	36
Drywall and Ceiling Tile Installers	920	980	60	6.5	6	13	19
Electricians	2,350	2,580	230	9.8	23	61	84
Painters, Construction and Maintenance	990	1,120	130	13.1	13	18	31
Plumbers, Pipefitters, and Steamfitters	1,340	1,530	190	14.2	19	28	47
Metal Workers and Plastic Workers	2,200	2,620	420	19.1	42	44	86
Helpers - Construction Trades	870	960	90	10.3	9	22	31
Maintenance and Repair Workers, General	2,630	3,100	470	17.9	47	7	54
Welders, Cutters, Solderers, and Brazers	1,110	1,430	320	28.8	32	24	56
Plant and System Operators	1,460	1,600	140	9.6	14	39	53
Power Plant Operators	190	220	30	15.8	3	7	10
Architects, Surveyors, and Cartographers	400	500	100	25.0	10	10	20
Engineering Managers	380	460	80	21.1	8	8	16
Supervisors, Construction and Extraction Workers	2,460	2,820	360	14.6	36	34	70
Machinists	410	480	70	17.1	7	6	13

Source: California EDD, 2009

APPENDIX P

PUBLIC HEALTH AND SAFETY

Appendix P: Public Health & Safety

Worker Safety

This appendix describes or outlines the systems and procedures that will be implemented to provide occupational safety and health protection for AMSP workers in accordance with all applicable requirements, and includes descriptions of the health and safety programs that will be used during both Project construction and operation.

Construction Regulations

Construction health and safety regulations are provided in 29 CFR § 1926. Federal safety and health regulations for construction also are provided in 40 U.S. Code (USC) 327 et seq.; these requirements are addressed in Title 8, California Code of Regulations (CCR), Chapter 4, Subchapter 4, General Construction Safety Orders.

Operation Regulations

Occupational health and safety standards for industrial facilities are provided in 29 Code of Federal Regulations (CFR) §1910 et seq. Per the 1989 Occupational Status Agreement between the federal OSHA and the California Department of Occupational Safety and Health, the state enforces most federal regulations and standards, although the federal OSHA has retained concurrent enforcement jurisdiction for certain federal standards (e.g., those related to hazardous waste).

State Regulations

The California Occupational Safety and Health Administration (Cal-OSHA) is responsible for enforcing most Federal health and safety regulations and standards, as well as state regulations dealing with health and safety issues during industrial facility construction and operation. These regulations deal with a variety of issues such as equipment design, personnel training, operational procedures, and safety devices, and are found primarily in California Code of Regulations, Title 8. Construction

Construction safety orders are published at Title 8 of the California Code of Regulations, sections 1502, et seq., and are made public by Cal/OSHA. These requirements apply to the construction phase of the project and will be addressed in the construction safety and health programs which will include the following:

- Construction Injury and Illness Prevention Plan (8 CCR § 1509);
- Construction Fire Protection and Prevention Plan (8 CCR § 1920);
- Personal Protective Equipment Program (8 CCR § 1514 - 1522); and
- Emergency Action Program and Plan (8 CCR § 3220).

Additional programs under General Industry Safety Orders (8 CCR §§ 3200 to 6184), Electrical Safety Orders (8 CCR §§2299 to 2974) and Unfired Pressure Vessel Safety Orders (8 CCR §§ 450

to 544) will include: electrical safety program; motor vehicle and heavy equipment safety program; forklift operation program; excavation/trenching program; fall protection program; scaffolding/ladder safety program; articulating boom platforms program; crane and material handling program; housekeeping and material handling and storage program; respiratory protection program; employee exposure monitoring program; hand and portable power tool safety program; hearing conservation program; back injury prevention program; hazard communication program; heat and cold stress monitoring and control program; pressure vessel and pipeline safety program; hazardous waste program; hot work safety program; permit-required confined space entry program; and demolition procedure (if applicable).

24 CCR, also known as the California Building Standards Code, is a compilation of three types of building standards from three different origins: building standards that have been adopted by state agencies without change from building standards contained in international codes; building standards that have been adopted and adapted from the national model code standards to meet California conditions; and building standards, authorized by the California legislature, that constitute extensive additions not covered by the model codes that have been adopted to address particular California concerns.

Operations

An operations and maintenance safety and health program will be prepared prior to operation, and will include the following programs and plans:

- Injury and Illness Prevention Program (8 CCR § 3203);
- Fire Protection and Prevention Program (8 CCR § 3221);
- Personal Protective Equipment Program (8 CCR §§ 3401 to 3411); and
- Emergency Action Plan (8 CCR § 3220).

In addition, the requirements under General Industry Safety Orders (8 CCR §§ 3200 to 6184), Electrical Safety Orders (8 CCR §§2299 to 2974) and Unfired Pressure Vessel Safety Orders (8 CCR §§ 450 to 560) will apply to this project. Written (operations) safety programs for the Project will ensure compliance with those requirements.

Involved Agencies and Required Permits

Agency contacts regarding worker health and safety for the Project are shown in Table P-1. Applicable worker safety permits required for the Project are listed in Table P-2, Permits and Approvals, along with the activities covered for each permit as well as the application requirements to obtain the permit. Generally, the permit notification or application requirement is 24 hours prior to commencement of work. A specific permitting schedule is not provided because the permits may be required at several points in the construction of the plant or during operation.

Table P-1: Agencies and Agency Contacts

Agency Contact	Phone/E-mail	Permit/Issue
California Occupational and Safety Administration (Cal-OSHA) Duty Officer 464 West 4th Street, Room 339 San Bernardino, CA 92408	Ray Acree Area Manager, San Bernardino Consultation Office (909) 383-4567 Compliance Division (909) 383-4321	See Permits in Table ___, Permits and Approvals
San Bernardino County Fire Department, Victorville Office 15456 W. Sage St. Suite 205 Victorville, CA. 92392	Fire Prevention (760) 843-4375	Uniform Fire Code, NFPA compliance, and CUPA agency.
San Bernardino County Building Inspector 301 East Mt. View Avenue Barstow, California 92311	Julian del Real (760) 256-4750	See Permits in Table ___, Permits and Approvals

Table P-2: Permits and Approvals

Permit/Approval	Issuing Agency	Law/Application Requirements	Permit Schedule
Trenching, Excavation, and Erection or Demolition Permit	Cal-OSHA	Permits are required for the following operations: • Trenches and excavations of more than five feet below ground surface where personnel are required to enter. • Construction of buildings, structures, scaffolding, or false work that are more than three stories high. • Demolition of any building, structure, or the dismantling of scaffolding or false work that are	Submit completed permit application to Fresno Office and receive a permit within 24 hours. Annual permits are submitted to any Cal-OSHA district or field office prior to commencing construction and receive a permit within 24 hours.

		more than three stories high.	
Erection of a Fixed Tower Crane Permit	Cal-OSHA	Permits are required for the following operations: • Erection, climbing, and dismantling of fixed tower cranes. Additionally, notifications to the Cal-OSHA must be made at least 24 hours prior to the initiation of the following activities: • Completion of erection and commencement of operation • Climbing of the tower crane • Dismantling of the tower crane	Submit completed permit application to Fresno Office and receive a permit within 24 hours. Annual permits are submitted to any Cal-OSHA district or field office prior to commencing construction and receive a permit within 24 hours.

Construction and Operations Health and Safety

Health and safety programs designed to mitigate hazards and comply with applicable regulations will be developed and implemented to protect worker health and safety during Project construction and operations. Qualified individuals will perform periodic audits to evaluate regulatory compliance and to determine whether proper work practices and programs are being used to mitigate hazardous conditions.

Hazard Analysis

A hazard analysis of the Project is summarized in Table P-3, Project Hazard Analysis. This table lists work activities and associated hazards and shows programs designed to reduce the occurrence of each exposure, work place, or occupational hazard. Because the types of work activities, associated hazards, and hazard control approaches shown are generic and apply to both construction and operations work activities, Table P-3 applies to both AMSP/Lockhart Substation construction and operation. In order to ensure that they are appropriate for AMSP/Lockhart Substation activities at that time, the analyses of hazards and the specifics of control strategies will be updated as AMSP/Lockhart Substation design, construction, and operation proceed.

Table P-3: Project Hazard Analysis (Construction and Operations Phases)

Activity	Hazard	Control
Motor Vehicle and Heavy Equipment Use	Collisions between equipment, injury to operators and construction workers, and damage to construction and operation equipment.	Establish a Motor Vehicle and Heavy Equipment Safety Program.

Activity	Hazard	Control
Forklift Operation	Similar to motor vehicle and heavy equipment use.	Same as above and provide Forklift Operator Training Program
Working in Elevated Locations	Injury to employees from falls from elevated locations.	Establish a Fall Protection Program and Scaffolding Safety Program
Trenching and Excavation Operations	Injury to employee and property damage from unsafe trenches and excavations.	Establish a Trenching and Excavation Safety Program, and a Confined Space Permit Program
Use of Cranes or Derricks	Equipment and property damage from falling loads and injuries to construction workers.	Implementation of Crane Permits per Cal-OSHA requirements and establishing a Hoisting and Rigging Safety Program
Plant Systems, Maintenance, and General Construction Activities	Injury to Employee and property damage from various contact with hazardous energy sources (e.g., heat sources, electrical, tools, and mechanical equipment)	Establish procedures to control energy sources (e.g., Lockout/Tagout Program, Hot Work Permits, and Cold Work Permits)
Working with Flammable and Combustible Liquids	Danger of fire or explosions and damage to property and injury to personnel	Establish Flammable and Combustible Liquid Storage and a Chemical Handling Program. Implement Fire Prevention and Protection Program. Implement Proper Housekeeping Policy and Program
Cutting and Welding (Hot Work)	Injury to employee and property damage from fire. Employee exposure to toxic fumes during cutting and welding operations Eye injury due to exposure to ultraviolet and infrared radiation during cutting and welding.	Establish a Respiratory Protection Program, Hot Work Program, Industrial Hygiene Monitoring Program, and a Housekeeping Policy
Working on or with Electrical Equipment and Systems	Injury to employee and equipment from flashovers and contact with electricity	Implement an Electrical Safety Program, Personal Protective Equipment Program, Hazardous Energy Control, Lockout/Tagout Program, etc.

Activity	Hazard	Control
Construction Assembly, Repair, and/or Maintenance Activities	Injury to employee from hand and portable power tools	Implement Hand and Portable Power Tool Safety Program, Personal Protective Equipment Program, and Tool Inspection Program
Ingress and Egress Issues	Injury to employee and property damage from inadequate walking and work surfaces areas	Establishing a Housekeeping Policy and Program, Confined Space Entry Program
Hearing Loss	Injury to employee from overexposure or inadequate ear protection	Implement a Hearing Conservation Program and a Personal Protective Equipment Program
Lifting Heavy Objects	Injury to employee from improper carrying or lifting and of materials and equipment	Establish a Safe Lifting Program and Personal Protection Equipment Program for adequate material handling.
Driving Small Vehicle (Cars and Pickups)	Collisions between equipment, injury to operators and construction workers, and damage to construction and operation equipment	Establish a Safe Driving Program
Exposure to Hazardous Gases, Vapors, Dust, and Fumes	Injury to employee exposure or overexposure to hazardous gases, vapors, dusts, and fumes	Establish a Hazardous Substances Program, Respiratory Protection Program, Personal Protective Equipment Program, and Industrial Hygiene Exposure Monitoring Program/Records
High Pressure Steam/Air Systems Testing, troubleshooting, Repair, and Maintenance.	Injury to employee and property damage from sudden unexpected release of high pressure steam or air.	Install proper relief valves or vents, Establish Relief Valve Maintenance and Testing Program, Proof-testing pressure system components, Hazardous Energy Control, Lockout/Tagout Program, and Line Breaking Safety Program

Injury and Illness Prevention Plan (IIPP)

The AMSP/Lockhart Substation construction IIPP will meet Cal-OSHA Injury and Illness Prevention Program requirements. The construction IIPP will be adapted as needed to develop the operations phase IIPP, which is required by Title 8 CCR Section 3203. The IIPP for the AMSP/Lockhart Substation will include the following elements:

- Specify personnel responsibility for implementing this plan,
- Establish safety and health policy of the plan,
- Define work rules and safe work practices for construction activities,
- Determine system for ensuring that employees comply with safe work practices,
- Implement an employee safety communications program,
- Identify and evaluate individual work place-related hazards and develop necessary program(s),
- Establish methods and/or procedures for correcting unsafe or unhealthy conditions, work practices, and work procedures in a timely manner based on the severity of the hazards,
- Specify safety procedures (e.g., fall protection, hearing protection, lock-out/tag-out, and respiratory protection), and
- Determine and establish training and instruction requirements and programs.

Personal Protective Equipment (PPE) Program

The AMSP/Lockhart Substation will develop and implement a PPE Program during both construction and operation phase that will apply to all contractor employees, subcontractor employees, and direct Project employees. The elements of the PPE Program will be the same for both construction and operation phases. However, program specifics will be updated as needed as the AMSP/Lockhart Substation transitions from construction into operations. Specific requirements of the Personal Protective Equipment Program include:

- Determine and provide personal protective devices for specific jobs.
- Provide proper head protection requirements.
- Establish eye and face protection requirements.
- Identify body protection equipment requirements.
- Implement hand protection requirements.
- Define proper foot protection.
- Provide proper sanitation facilities.
- Determine safety belts and life lines job requirements.
- Establish procedures to prevent and protect personnel from electric shock.

- Identify on-site and off-site medical services and first aid requirements.
- Specify respiratory protection requirements for jobs.

Required PPE will be approved for use and distinctly marked to facilitate identification. The type of PPE required for each job task will be described in the job safety analysis for that task. The use of PPE for site activities includes, but is not limited to the items specifically described in Table P-4, Basic Protective Equipment Guide, will comply with Cal-OSHA requirements (Title 8 CCR § 1514-1522). The work atmosphere will be sampled and tested per established protocols to evaluate the adequacy of the PPE assigned for specific tasks. A respiratory protection program complying with Title 8 CCR § 5144 will be developed that includes respirator training, fit testing, monitoring, selection, etc., if testing results indicate that such a program is needed.

Table P-4: Basic Protective Equipment Guide

Body Area	Hazards	Recommended Action
Eyes/Face	Low-velocity flying particles High-velocity chips and sparks Corrosive liquid splash during transfer Entering an acid storage system Welding-injurious light rays	Safety glasses with side shields Impact goggles or safety glasses with full face shield Splash-proof goggles and face shield Acid hood Welding hood with appropriate eye filter lenses
Head/Ears	General wear, overhead rigging, material handling, maintenance, and general construction operations Noise exposure	Hard hat Ear plugs or muff
Respiratory System	Low-hazard inert dusts Welding fumes Low concentration solvent vapors Acid mists High-concentration dusts or vapors Oxygen deficiencies or gases	Dust mask Appropriately ventilated area Cartridge-type, positive pressure, full-face respirator Air line respirator Self-contained breathing apparatus
Hands/Arms	Handling rough or sharp objects Handling hot objects Using solvents	Leather gloves Insulated gloves Impervious synthetic gloves

Body Area	Hazards	Recommended Action
Feet/Legs	General wear for light handling Handling heavy objects Using brush hooks or scythes Working with corrosive liquids Underground work	Safety toe shoes Metatarsal safety shoes Shin guards Safety toe boots, full leather, no breather holes Safety toe synthetic boots
Trunk/Full Body	Hot or corrosive liquids Punctures, impact, or cuts Cleanup of broken acid containers.	Full body suit made of appropriate materials, synthetic apron Rubber apron for corrosive liquids Canvas or leather kickback apron or metal mesh apron Full body suit made of appropriate materials
Fall Protection/Rescue	Working from elevated structure of platform w/o standard railings Vessel entry Suspended scaffolds	Safety harness, arrestor, and lanyard Harness and lifeline or wristlets and lifeline Lifeline, safety harness/lanyard Boom lift platform with cage

Safety Training Program

The AMSP/Lockhart Substation will develop and implement a Construction Safety Training Program that will be updated as needed to be suitable for the specific work activities associated with Operations Safety Training Program as the Project transitions from construction into routine power generation facility operations. Table P-5, Training Programs and Target Employees, lists the typical training courses along with the employees who are required to receive the training.

Table P-5: Training Programs and Target Employees (Construction and Operation Phases)

Training Course	Target Employees
Injury and Illness Prevention Training	All employees.
Emergency Action Plan Training	All employees.

Training Course	Target Employees
PPE Training	All employees.
Heavy Equipment Safety Training	Employees working on, near, or with heavy equipment.
Forklift Operation Training	Employees working with forklifts.
Excavation and Trenching Safety Training	Employees involved with trenching or excavation operations.
Fall Protection Training	All employees.
Scaffolding and Ladder Safety Training	Employees required to erect or use scaffolding and employees using ladders.
Hoist and Rigging Program	Employees and supervisors responsible for conducting hoists and rigging operations.
Crane Safety Training	Employees supervising, crane operators, and employees involved in crane operations.
Fire Protection and Prevention Training	All employees.
Confined Space Entry Program	All employees.
Blood Borne Pathogens Training	First Responders.
Hazard Communication Training	Employees working with or handling hazardous materials.
Electrical Safety Training	Employees performing work with electrical systems, equipment, or electrical extension cords. Additionally, employees working with lockout/tagout activities.
Hand and Portable Power Tool Safety Training	All employees.
Heat Stress and Cold Stress Safety Training	All employees.
Hearing Conservation Training	All employees.
Back Injury Prevention Training	All employees.
Safe Driving Training	All employees.

Training Course	Target Employees
Pressure Vessel and Pipeline Safety Training	Employees supervising or working on pressurized vessel, pipes, or equipment.
Respiratory Protection Training	All employees required to wear respiratory protection equipment.
Hot Work Training	All employees working with welding, heating, or other equipment that generates ignition sources.

Specific safety program requirements for both construction and operations are identified below.

Develop a Motor Vehicle and Heavy Equipment Safety Program:

- Establish a program for operation and maintenance of Project equipment and vehicles.
- Develop a job site inspection procedure.
- Establish PPE requirements for job site personnel.
- Determine and establish training and instruction requirements and programs.
- Develop a Forklift Operation Program:
- Define training and certification requirements for operators based on equipment use.
- Determine fueling and refueling procedures and equipment.
- Establish safe operating parameters for specific jobs and equipment.
- Determine and establish training and instruction requirements and programs.

Develop an Excavation and Trenching Program and permit requirements:

- Establish shoring, sloping, and benching requirements.
- Determine job-specific Cal-OSHA permit requirements (e.g., lockout/tagout, confined space, and hot work).
- Develop equipment inspection procedures.
- Establish air monitoring requirements and procedures.
- Develop access and egress requirements for job sites.
- Establish calling procedures for the Underground Services Alert (USA) program.
- Determine and establish training and instruction requirements and programs.

Develop a Fall Protection Program:

- Evaluate specific job site of fall hazards
- Provide requirements for protection device use.

- Determine and establish training and instruction requirements and programs.

Develop a Scaffolding and Ladder Safety Program:

- Establish construction and inspection requirements for scaffolding erection.
- Determine scaffolding applicability of use and proper use procedures.
- Determine and establish training and instruction requirements and programs.

Develop an Articulating Boom Platforms Program:

- Establish procedures for inspection of equipment.
- Determine proper load rating of equipment.
- Establish safe operating parameters of equipment.
- Determine and establish training and instruction requirements and programs.

Develop a Crane and Material Handling Program:

- Determine certified and licensed requirements for operators.
- Establish inspection requirements and procedures.
- Determine proper load rates of equipment.
- Establish safe operating parameters of equipment.
- Determine and establish training and instruction requirements and programs.

Develop an Employee Exposure Monitoring Program:

- Determine and evaluate exposure limitations and requirements for specific job sites (e.g., noise, chemicals, and dust).
- Establish monitoring requirements for specific exposures.
- Establish a medical surveillance program and record keeping requirements.
- Determine and establish training and instruction requirements and programs.

Develop an Electrical Safety Program:

- Establish electrical grounding procedures and requirements.
- Determine lockout/tag-out permitting procedures.
- Determine overhead and underground utilities design and installation requirements.
- Implement electrical equipment inspection procedures.
- Determine and establish training and instruction requirements and programs.

Develop a Hand and Portable Power Tool Safety Program:

- Evaluate power tools guards and tools proper operation.

- Establish requirements and procedures for inspecting power tools prior to use.
- Determine and establish training and instruction requirements and programs.

Develop a Housekeeping and Material Handling and Storage Program:

- Determine chemical and other equipment storage requirements.
- Examine walkways and work surfaces for proper clearance and elimination of obstructions.
- Examine equipment handling and storage requirements.
- Determine and establish training and instruction requirements and programs.

Develop a Hearing Conservation Program:

- Establish proper hearing protective devices and type to use.
- Determine and establish training and instruction requirements and programs.

Develop a Back Injury Prevention Program:

- Determine proper lifting and material handling procedures.
- Provide proper PPE.
- Determine and establish training and instruction requirements and programs.

Develop a Hazard Communication Program:

- Establish labeling requirements for chemicals.
- Determine proper storage and handling requirements.
- Make available Material Safety Data Sheets (MSDSs) for chemicals used on site.
- Establish a chemical inventories.
- Determine and establish training and instruction requirements and programs.

Develop a Respiratory Protection Program:

- Determine the appropriate tasks for use of job-specific respiratory equipment.
- Establish a designated storage area for equipment.
- Perform a fit testing for equipment.
- Establish medical record keeping requirements.
- Perform proper inspection and repair.
- Determine and establish training and instruction requirements and programs.

Develop a Heat and Cold Stress Monitoring and Control Program:

- Determine monitoring requirements.

- Develop a process to prevent and control exposures.
- Determine and establish training and instruction requirements and programs.

Develop a Pressure Vessel and Pipeline Safety Program:

- Implement a pressure line-breaking program.
- Establish equipment inspection and maintenance procedures.
- Determine blocking, bleeding, and blanking requirements.
- Determine and establish training and instruction requirements and programs.

Construction Health and Safety

Construction Fire Protection and Prevention Program

The AMSP/Lockhart Substation will rely on both onsite fire protection systems and offsite fire protection services by San Bernardino County Fire Department, during both construction and operations. A Construction Fire Protection and Prevention Plan will be developed and followed throughout all phases of construction. During construction, the permanent facility fire suppression system will be placed in service as early as practicable. Prior to installation of the facility's permanent fire suppression system, fire extinguishers and other portable fire-fighting equipment will be available onsite. These fire extinguishers will be maintained for the full construction duration, in accordance with Cal-OSHA requirements.

Locations of portable fire extinguishers will include, but not necessarily be limited to, portable office spaces, hot work areas, flammable chemical storage areas, and mobile equipment (e.g., passenger vehicles and earthmoving equipment). Fire-fighting equipment will be located to allow for unobstructed access to the equipment and will be conspicuously marked. Portable firefighting equipment will be routinely inspected per regulatory requirements and replaced immediately, if defective, or if in need of recharge.

Construction fire prevention regulations in Title 8 CCR § 1920 et seq. will be followed, as necessary, to prevent construction fires. Specific requirements for the Construction Fire Protection and Prevention Program include:

- Determine general program requirements.
- Develop good housekeeping practices and procedures (e.g., proper storage of equipment, cleanup of job sites, and neat and orderly work places).
- Establish employee alarm and/or communication system(s).
- Provide portable fire extinguishers at appropriate site locations.
- Locate fixed fire-fighting equipment in suitable areas.
- Specify fire control requirements and procedures.
- Establish proper flammable and combustible liquid storage facilities.

- Identify the location and use of flammable and combustible liquids.
- Provide proper dispensing facilities for flammable materials.
- Determine proper disposal requirements for flammable liquids.
- Identify proper servicing and refueling locations.
- Establish and determine training and instruction requirements and programs.

Special attention will be given to operations involving open flames, such as welding, cutting, and the use of flammable liquids and gases. Personnel involved in such operations will have appropriate training. A fire watch, utilizing the appropriate class of extinguishers or other equipment, will be maintained during hazardous or hot work operations. Site personnel will not be expected to fight fires past the incipient stage.

Fuel storage areas will be contained and protected in accordance with Cal-OSHA requirements. It is anticipated that the Project will have only diesel and gasoline liquid fuels stored on-site during construction. This liquid fuel storage will be used for fueling on-site equipment and vehicles. The capacity and location of the fuel storage containers will be reviewed and approved by the San Bernardino Fire Department Hazardous Materials Division (CUPA) prior to installation and use.

Emergency Action Program and Plan

The AMSP/Lockhart Substation will establish a Construction Emergency Action Program and Plan that will include emergency evacuation procedures. Specific requirements of the plan include:

- Establish emergency procedures for the protection of personnel, equipment, the environment, and materials.
- Identify fire and emergency reporting procedures.
- Determine response actions for accidents involving personnel and/or property.
- Develop response and reporting requirements for bomb threats.
- Specify site assembly and emergency evacuation route procedures.
- Define natural disaster responses (e.g., earthquakes, high winds, and flooding).
- Establish reporting and notification procedures for emergencies (including on-site, off-site, local authorities, and/or state jurisdictions).
- Determine alarm and communication systems needed for specific operations.
- Develop a Spill Response, Prevention, and Countermeasure (SPCC) plan.
- Identify emergency personnel (response team) responsibilities and notification roster.
- Obtain emergency response equipment and strategically locate.

- Establish and determine training and instruction requirements and programs.

Operations Health and Safety

As noted earlier, many of the workplace health and safety programs for AMSP/Lockhart Substation operations will be similar to those developed for AMSP/Lockhart Substation construction activities. Thus, many of the construction programs and plans will be revised so they are appropriate for routine operations activities, and the AMSP/Lockhart Substation health and safety programs will transition from the construction phase into the operations phase as the AMSP/Lockhart Substation makes the transition between phases. The discussions presented earlier for the construction phase concerning the AMSP/Lockhart Substation's Hazard Analysis and IIIP apply to operations as well and are not repeated in this subsection.

Operations Fire Protection and Prevention Program

Fire protection at the AMSP site during AMSP/Lockhart Substation operations will include measures relating to safeguarding human life, preventing personnel injury, preservation of property and minimizing downtime due to fire or explosion. Fire protection measures will include fire prevention methods to prevent the inception of fires. Of concern are adequate exits, fire-safe construction, reduction of ignition sources, control of fuel sources, and proper maintenance of fire water supply and sprinkler systems.

Because the San Bernardino County Fire Department (SBCoFD) will have fire protection responsibility for the AMSP site, the AMSP/Lockhart Substation's fire suppression systems will be subject to review and approval by the SBCoFD. In addition, the fire suppression facilities will be designed by a California Registered Fire Protection Engineer and fire protection equipment will be installed and maintained in accordance with applicable NFPA standards and recommendations. AMSP/Lockhart Substation facilities also will be designed and operated in conformance with Uniform Fire Code requirements for safe storage, dispensing, use, and handling of hazardous materials, as well as meeting state and local requirements for preparation of hazardous materials release plans and inventories.

The SBCoFD also will perform the final inspection of the AMSP site when construction is complete and periodic fire and life safety inspections thereafter, including reviewing and approving programs for regular equipment inspections and servicing and for the training of employees in fire protection procedures. In addition, Mojave Solar's insurance carrier will likely provide annual inspections by a fire protection specialist. The AMSP/Lockhart Substation operations phase Fire Prevention Plan will contain the required elements as defined in Title 8 CCR § 3221 including:

- Scope, purpose, and applicability
- Potential fire hazards
- Proper handling and storage of potential fire hazards
- Potential ignition sources

- Control of potential ignition sources
- Persons responsible for equipment and systems maintenance
- Portable fire extinguishers
- Automatic sprinkler fire suppression system
- Water-spray fire system
- Local fire department
- Training
- Housekeeping procedures
- Recordkeeping requirements

Fire Protection System

Fire protection systems are provided to limit personnel injury, property loss, and AMSP/Lockhart Substation downtime resulting from a fire. The systems include a fire protection water system and portable fire extinguishers.

The AMSP's fire protection water system will be supplied from a dedicated 360,000-gallon portion of the 1,930,000-gallon service water storage tanks located in each of the two power islands. One electric and one diesel-fueled backup firewater pump for each power island, each with a capacity of 3,000 gallons per minute, will deliver water to the fire protection water-piping network. A smaller electric motor-driven pump jockey pump will maintain pressure in the piping network. If the jockey pump is unable to maintain a set operating pressure in the piping network, the fire pump starts automatically.

The piping network will be configured in a loop so that a piping failure can be isolated with shutoff valves without interrupting the supply of water to a majority of the loop. The piping network will supply fire hydrants located at intervals throughout the power plant site, a sprinkler deluge system at each unit transformer, HTF expansion tank and circulating pump area and sprinkler systems at the STG and in the operations and administration buildings. Portable fire extinguishers of appropriate sizes and types will be located throughout the Alpha and Beta Plant sites.

Fire protection for the solar field will be provided by zoned isolation of the HTF lines in the event of a rupture that results in fire. The HTF will be allowed to extinguish itself naturally, since the remainder of the field is of nonflammable material (aluminum, steel, and glass).

Fuel Handling System

The auxiliary boilers would be fueled by natural gas supplied from an existing 16-inch diameter pipeline that runs to the project under Harper Lake Road. This pipeline was installed for the original six SEGS projects envisioned at Harper Lake. Excess capacity exists due to the sizing of the pipeline for those projects which used natural gas to fire full-capacity boilers. Safety

pressure relief valves are provided downstream of the pressure regulation valves. The peak natural gas rate is 43 million British thermal units per hour (MMBtu/hr) for the two auxiliary boilers combined. A maximum of 94,170 MMBtu/year of fuel consumption would be expected for the boilers.

Hazardous Material / Waste Handling

The analysis of AMSP environmental impacts related to waste management is based on the following significance criteria:

- Offsite treatment or disposal of non-hazardous solid wastes must not significantly impact available landfill, recycling or treatment program capacities;
- Offsite disposal of hazardous wastes must not significantly impact available Class I landfill capacity; and
- The facility must comply with all applicable LORS regarding management of non-hazardous and hazardous wastes.

Additionally, according to CEQA Guidelines, a project has a significant impact if it:

- Breaches standards relating to solid waste or litter control;
- Creates a potential public health hazard or involves materials which pose a hazard; or
- Results in a need for new systems or substantial alterations to existing waste disposal facilities.

The following sections describe the types of waste that are expected to be generated during the construction and operation of the Project and how non-hazardous solid waste and hazardous wastes would be managed and disposed.

To ensure that public health and safety and the environment are protected, a facility closure plan would be prepared prior to Project closure. The closure plan would ensure that the management, recycling, and/or disposal of non-hazardous and hazardous wastes associated with facility closure activities are performed in accordance with applicable LORS.

Construction

Table P-6 summarizes the anticipated waste streams generated during construction of the AMSP and Lockhart Substation, along with appropriate management methods for treatment or disposal.

Table P-6: Summary of Construction Waste Streams and Management Methods

				Waste Management Method	
Waste Stream and Classification[1]	**Origin and Composition**	**Estimated Amount**	**Estimated Frequency of Generation**	**On-site**	**Off-site**

				Waste Management Method	
Waste Stream and Classification[1]	**Origin and Composition**	**Estimated Amount**	**Estimated Frequency of Generation**	**On-site**	**Off-site**
Construction waste - Hazardous	Empty hazardous material containers	1 cubic yard per week (cy/wk)	Intermittent	None. Accumulate onsite for <90 days	Return to vendor or dispose in a permitted waste disposal facility
Construction waste - Hazardous	Solvents, used oil, paint, oily rags	175 gallons	Every 90 days	None. Accumulate onsite for <90 days	Recycle or use for energy recovery
Heat Exchanger cleaning waste - Hazardous	Chelant type solution	1,000 gallons	One time event during commissioning	None	Dispose to permitted hazardous waste facility
Spent batteries – Universal Waste	Lead acid, alkaline	20 in 2 years	Intermittent	None. Accumulate onsite for <90 days	Recycle
Construction waste - Nonhazardous	Scrap wood, concrete, steel, glass, plastic, paper	40 cubic yards / week	Intermittent	None	Recycle wherever possible, otherwise dispose to Class III landfill
Sanitary waste - Nonhazardous	Portable chemical toilets – sanitary waste	200 gallons / day	Periodically pumped to tanker truck by licensed contractors	None	Ship to sanitary wastewater treatment plant
Office waste - Nonhazardous	Paper, aluminum, food	1 cy/wk	Intermittent	None	Recycle or dispose to Class III landfill

[1]Classification under Title 22, CCR § 66261.20 et seq.

Hazardous Waste Disposal

Most of the hazardous waste generated during Project construction, such as unused or off specification paint and primer, paint thinner, solvents, and vehicle and equipment maintenance-related materials, can be recycled. Empty containers (i.e., drums and totes) would be returned to the vendor, if possible. The small quantities of hazardous waste that cannot be recycled are not expected to significantly impact the capacity of the Class I landfills located in California.

In the unlikely event that contaminated soil is encountered during excavation activities, the soil would be segregated, sampled, and tested to determine appropriate disposal/treatment options. If the soil is classified as hazardous, San Bernardino County Fire Department would be notified and the soil would be hauled to a Class I landfill or other appropriate soil treatment and recycling facility, if required. San Bernardino County Fire Department, Hazardous Materials Division also would be notified of previously unknown wells, tanks or other underground storage facilities discovered during construction. Subsequent removal of such equipment, including potential remediation activities (if required), would be conducted in accordance with CCR Title 22 and the California Health and Safety Code.

Universal Waste Disposal

Information on universal wastes anticipated to be generated during Project construction is provided in Table P-7. Universal wastes and unusable materials would be handled, stored, and managed per California Universal Waste requirements.

Table P-7: Summary of Construction Waste Streams and Management Methods

				Waste Management Method	
Waste Stream and Classification[1]	**Origin and Composition**	**Estimated Amount**	**Estimated Frequency of Generation**	**On-site**	**Off-site**
Construction waste - Hazardous	Empty hazardous material containers	1 cubic yard per week (cy/wk)	Intermittent	None. Accumulate onsite for <90 days	Return to vendor or dispose in a permitted waste disposal facility
Construction waste - Hazardous	Solvents, used oil, paint, oily rags	175 gallons	Every 90 days	None. Accumulate onsite for <90 days	Recycle or use for energy recovery

				Waste Management Method	
Waste Stream and Classification[1]	**Origin and Composition**	**Estimated Amount**	**Estimated Frequency of Generation**	**On-site**	**Off-site**
Heat Exchanger cleaning waste - Hazardous	Chelant type solution	1,000 gallons	One time event during commissioning	None	Dispose to permitted hazardous waste facility
Spent batteries – Universal Waste	Lead acid, alkaline	20 in 2 years	Intermittent	None. Accumulate onsite for <90 days	Recycle
Construction waste - Nonhazardous	Scrap wood, concrete, steel, glass, plastic, paper	40 cubic yards / week	Intermittent	None	Recycle wherever possible, otherwise dispose to Class III landfill
Sanitary waste - Nonhazardous	Portable chemical toilets – sanitary waste	200 gallons / day	Periodically pumped to tanker truck by licensed contractors	None	Ship to sanitary wastewater treatment plant
Office waste - Nonhazardous	Paper, aluminum, food	1 cy/wk	Intermittent	None	Recycle or dispose to Class III landfill
[1]Classification under Title 22, CCR § 66261.20 et seq.					

Non-Hazardous Solid Waste Disposal

Solid waste generated from Project construction activities may include scrap lumber, plastic, metal, glass, excess concrete, and empty non-hazardous containers. Management and disposal of these wastes would be the responsibility of the construction contractor(s). Typical management practices for this material include recycling when possible, proper storage of waste to prevent wind dispersion, and routine pick-up and disposal of waste to approved local Class III landfills. Solid wastes from Project construction are not expected to significantly impact the capacity of the Class III landfills in San Bernardino County.

Wastewater generated at the construction site would include sanitary wastes, dust suppression drainage, and equipment wash water. Construction-related sanitary wastes, collected in portable self-contained chemical toilets, would be pumped periodically. Potentially contaminated equipment wash water would be contained at designated wash areas and transported to a wastewater treatment facility via a licensed hauler.

Operation

The operation of the AMSP is expected to generate sanitary wastewater, non-hazardous wastes, and small quantities of hazardous wastes. Operation of Project linear facilities (gas pipeline, fiber optic cable) would not generate long-term waste streams. The types of waste and their estimated volumes are summarized in Table P-8.

Table P-8: Summary of Operation Waste Streams and Management Methods for the AMSP/Lockhart Substation

Waste Stream and Waste Management Method Classification[1]	Origin and Composition	Estimated Amount	Estimated Frequency of Generation	Waste Management Method	
				On-Site	Off-Site
Used Hydraulic Fluid, Oils and Grease – Non-RCRA Hazardous	HTF system, turbine, and other hydraulic equipment	50,000 gallons /year	Intermittent	Accumulated for <90 days	Recycle
Effluent from oily water separation system – Non-RCRA Hazardous	Plant wash down area / oily water separation system	3,000 gallons /year	Intermittent	None	Recycle
Oily rags, oil absorbent, and oil filters – Non RCRA Hazardous	Various	Five 55-gallon drums / month	Intermittent	Accumulated for <90 days	Sent offsite for recovery or disposed at Class I landfill
Soil contaminated with HTF (> Design Levels - RWQCB) – Non-RCRA Hazardous	Solar array equipment leaks	10 cubic yards per year	Intermittent	Accumulated of < 90 days	Sent offsite for disposal at a Class I landfill

Waste Stream and Waste Management Method Classification[1]	Origin and Composition	Estimated Amount	Estimated Frequency of Generation	Waste Management Method	
				On-Site	Off-Site
Soil contaminated with HTF (< Design Levels - RWQCB) - Non RCRA Hazardous	Solar array	750 cubic yards/year	Intermittent	Bioremediation unit	Dispose to waste management facility
Spent batteries – Universal Waste	Rechargeable and household types	<10 / month	Continuous	Accumulate for <1 year	Recycle
Spent batteries – Hazardous	Lead acid	20 every 2 years	Intermittent	Accumulated for <90 days	Recycle
Spent fluorescent tubes – Universal Waste	Facility lighting	< 50 / year	Intermittent	Accumulate for <1 year	Recycle
Spent Demineralizer resin – Nonhazardous	Demineralizer	250 cubic feet	Once every 3 years	None	Recycle
Cooling Tower Blowdown – Designated Liquid Waste	Cooling tower	42,486 gallons /day	Continuous when plant is operating	Evaporation Ponds	None
Cooling Tower Basin Sludge - Nonhazardous	Cooling tower	10 tons/year	Annually	None	Dispose to waste management facility
Spent softener resin - Nonhazardous	Water Softener	500 ft /year	Once every 3 years	None	Recycle

Waste Stream and Waste Management Method Classification[1]	Origin and Composition	Estimated Amount	Estimated Frequency of Generation	Waste Management Method	
				On-Site	Off-Site
Cooling Tower Solids (Filter Press discharge) – Hazardous	Filter press solids, dewatered sludge cake	8,937 pounds per day	Continuous	None	Dispose to waste management facility
Sanitary wastewater - Nonhazardous	Toilets, washrooms	2,500 gallons /day	Continuous	Septic leach field	None
[1] Classification under Title 22, CCR § 66261.20 et seq.					

Hazardous Waste Disposal

Hazardous wastes anticipated to be generated during Project operation is summarized below:

- Used hydraulic fluids, oils, greases, oily filters and oily rags, and associated wastes: Used oils, greases, and oily effluent from the water separation systems would be accumulated and maintained onsite in secure hazardous waste accumulation areas within secondary containment. These wastes would be recycled whenever possible. Used oil and recovered oil from the oil/water separator would be recycled by a licensed oil recycler. Oily rags and oil absorbent (used to contain small spills) would be generated as a normal part of maintenance activities. These wastes would be recycled or shipped off site for energy recovery or disposal in a Class I landfill.
- The Project would include bioremediation/land farm units to treat soil contaminated with HTF in the event of a leak or spill. The proposed bioremediation and land farm facilities would cover an area of approximately 1.5 acres on each plant site. Appropriate contamination levels for bioremediation and land farming of site-specific soils would be determined by Lahontan-approved testing to ensure the adequacy of the bioremediation/land farm unit design for HTF-contaminated soil. Contaminated soil that exceeds this level would be disposed of at an appropriate waste facility.

  The bioremediation/land farm area would be designed in accordance with Lahontan RWQCB requirements and would include a leak detection system and monitoring wells. Treatment in the bioremediation units involves the addition of nitrogen and phosphorous (i.e., fertilizers) as nutrients to the HTF-contaminated soil to stimulate consumption of HTF by indigenous bacteria. The soil would remain in the

bioremediation/land farm unit until concentrations are reduced to appropriate levels for use as fill material on the site.

- Cleaning solutions: Waste cleaning solutions, such as solvents and other chemical cleaning solutions would be generated during routine equipment maintenance and repair. These waste cleaning solutions would be collected and recycled by a licensed contractor on a regular basis.
- Spent batteries: Lead-acid batteries would be returned to the vendor. Other spent batteries would be accumulated onsite in labeled containers and recycled at least annually per California Universal Waste requirements.

Hazardous wastes and unusable hazardous materials would be stored in a hazardous waste accumulation area. Hazardous waste areas would include secondary containment with a capacity to hold the volume of the largest container plus ten percent. Hazardous waste accumulation area regulations would be followed (e.g., weekly inspections). Wastes would be transported for recycling or disposal in accordance with all Federal, State, and local hazardous waste generator requirements. Hazardous wastes would be transported by a licensed hazardous waste hauler using a Uniform Hazardous Waste Manifest and disposed or recycled at an appropriately-permitted facility. Copies of manifests, reports, waste analysis, exception reports, land disposal restrictions and other related documents would be maintained onsite for as required.

Liquid Designated Waste

The cooling system for heat rejection from the steam cycle consists of a surface condenser, circulating water system, and a wet cooling tower. The surface condenser receives exhaust steam from the LP section of the STG and condenses it to liquid for return to the SSG. Wastewater from the SSG and demineralization system is sent to the cooling tower basin. The cooling tower blowdown (i.e., discharge) would be piped to onsite surface impoundments (evaporation ponds) for dewatering. The ponds are being designed so that the residual solids would not require removal for the duration of the Project's operating life. If solids removal is necessary for pond maintenance reasons, the removed solids would be shipped to an appropriate offsite disposal facility.

As discussed in the Project Description, the AMSP would have four evaporation ponds with a nominal surface area of 5 acres each for a total of 20 acres. Multiple ponds are planned to allow plant operations to continue in event that a pond needs to be taken out of service for some reason, e.g., needed maintenance. Each pond would have enough surface area so that the evaporation rate exceeds the cooling tower blowdown rate at maximum design conditions and at annual average conditions. As noted above, the planned pond depth (capacity) is intended to avoid the need for residual solids removal during the life of the Project. While most of the waste constituents in the liquid waste stream are not classified as hazardous, the combination of constituents along with the possibility of small quantities of heavy metals should classify the waste discharge as hazardous. The ponds would be designed in accordance with Lahontan

RWQCB requirements and would incorporate dual liners, a leak detection system and monitoring wells.

Non-Hazardous Waste: HTF-Contaminated Soil

Non-hazardous solid waste generated during operation of the power plant is likely to include soil contaminated with HTF from spills and leaks in the HTF system. Management of HTF-contaminated soil is based on the HTF concentrations in the soil. Soils with concentrations above the design level approved by the RWQCB would be shipped off site for disposal at a permitted Class I landfill. A facility-specific Waste Discharge Requirements (WDR) permit from the Lahontan RWQCB is required to operate a bioremediation unit and land farm unit. Soils with concentrations below the RWQCB design level would be treated on-site in an approved bioremediation/land farm facility.

Non-Hazardous Waste Disposal:

Non hazardous solid wastes generated during operation of the Project would include solid waste from routine maintenance (including used air filters, spent demineralizer resins, sand and filter media, cooling tower basin sludge, spent softener resins, clarifier blow down sludge), and office and domestic wastes. Maintenance-derived wastes would be recycled to the extent practical. Those maintenance-derived wastes that cannot be recycled would be transported for disposal at a Class III landfill. Domestic wastes, including office paper, newsprint, aluminum cans, plastic, and glass containers and other non hazardous solid waste material, would be recycled to the extent practical. The remaining solid wastes would be removed on a regular basis by a permitted waste hauler for disposal at a Class III landfill.

It is anticipated that disposal of non-hazardous solid waste from the Project would represent only a minimal increase, a small fraction of one percent, relative to the capacities of the local Class III landfills. Therefore the quantities of non-hazardous solid waste from the Project would not adversely impact available landfill capacity and can be considered insignificant.

Sanitary waste generated at the AMSP would be sent to an onsite septic system and leach field, there would be no offsite liquid discharges from the Project.

Table P-9: Project HRA Summary

	Boilers, Engines, Cooling Towers, HTF	
Risk Category	**MIR Project Values**	**Applicable Significance Threshold**
Cancer Risk	2.59 E-7	Moderate Risk = >$1x10^{-6}$ Significant Risk .=$100x10^{-6}$, HI>=10 Significant Health Risk =$10x10^{-6}$ HI=1
Chronic Hazard Index	0.00208	
Acute Hazard Index	0.0101	
Cancer Burden	0.0	
MIR Receptor #: 130, and location 469945mE, 3874500mN.		

* No acute REL has been established for diesel PM.

Legionella Best Management Practices

Legionella can grow symbiotically with other bacteria and can infect protozoan hosts. This provides *Legionella* with protection from adverse environmental conditions, including making it more resistant to water treatment with chlorine, biocides, and other disinfectants. Thus, if not properly maintained, cooling water systems and their components can amplify and disseminate aerosols containing *Legionella*.

The State of California regulates recycled water for use in cooling towers in Title 22, Section 60303, California Code of Regulations. This section requires that, in order to protect workers and the public who may come into contact with cooling tower mists, chlorine or another biocide must be used to treat the cooling system water to minimize the growth of *Legionella* and other micro-organisms. This regulation does not, at this time, apply to the Proposed Project since it intends to use well water (not reclaimed water) for cooling purposes.

The EPA published an extensive review of *Legionella* in a human health criteria document (EPA 1999). The EPA noted that *Legionella* may propagate in biofilms (collections of microorganisms surrounded by slime they secrete, attached to either inert or living surfaces) and that aerosol-generating systems such as cooling towers can aid in the transmission of *Legionella* from water to air. The EPA has inadequate quantitative data on the infectivity of *Legionella* in humans to prepare a dose-response evaluation. Therefore, sufficient information is not available to support a quantitative characterization of the threshold infective dose of *Legionella*. Thus, the presence of even small numbers of *Legionella* bacteria presents a risk – however small – of disease in humans.

In 2000 the Cooling Tower Institute (CTI) issued its own report and guidelines for the best practices for control of *Legionella* (CTI 2000). The CTI found that 40-60 percent of industrial cooling towers tested were found to contain *Legionella*. To minimize the risk from *Legionella*, the CTI noted that consensus recommendations included minimization of water stagnation, minimization of process leads into the cooling system that provide nutrients for bacteria, maintenance of overall system cleanliness, the application of scale and corrosion inhibitors as appropriate, the use of high-efficiency mist eliminators on cooling towers, and the overall general control of microbiological populations. Good preventive maintenance is very important in the efficient operation of cooling towers and other evaporative equipment (ASHRAE 1998). Preventive maintenance includes having effective drift eliminators, periodically cleaning the system if appropriate, maintaining mechanical components in working order, and maintaining an effective water treatment program with appropriate biocide concentrations. The efficacy of any biocide in ensuring that bacteria and in particular *Legionella* growth, is kept to a minimum is contingent upon a number of factors including but not limited to proper dosage amounts, appropriate application procedures and effective monitoring.

In order to ensure that *Legionella* growth is kept to a minimum, thereby protecting both nearby workers as well as members of the public, an appropriate biocide program and anti-biofilm agent monitoring program would be prepared and implemented for this project. These programs would ensure that proper levels of biocide and other agents are maintained within the cooling tower water at all times, that periodic measurements of *Legionella* levels are

conducted, and that periodic cleaning is conducted to remove bio-film buildup. The mitigation measure which is presented in Section 5.10.4.6 would reduce the chances of *Legionella* growing and dispersing to insignificant (RSA 2008).

E. HAZARDOUS MATERIALS MANAGEMENT

This analysis considers whether the construction and operation of the AMS project will create significant impacts to public health and safety resulting from the use, handling, storage, or transport of hazardous materials. Several locational factors affect the potential for project-related hazardous materials to cause adverse impacts. These include local meteorological conditions, terrain characteristics, and the proximity of population centers and sensitive receptors. Solar power facilities are also subject to a number of laws, ordinances, regulations, and standards (LORS) related to hazardous materials. The evidence incorporates all of these factors in the analysis of potential impacts, as summarized below.[28] The evidence was undisputed. (6/28/10 RT 64-76, 81, Exs, 1, § 5.6,13, 20, 25, 26 [IV], 48 [§5.0], 301, § 5.4, 306.)

SUMMARY AND DISCUSSION OF THE EVIDENCE

Engineering and administrative controls affect the significance of potential impacts related to the use, handling, storage and transport of hazardous materials. Engineering controls are those physical or mechanical systems (such as storage tanks or automatic shut-off valves), which can prevent a hazardous material spill from occurring, or which can limit the spill to a small amount and/or confine it to a small area. Administrative controls are those rules and procedures that workers at the facility must follow. Both types of controls are designed to help prevent accidents or keep them small if they do occur, and are specified at length in the evidence. (Ex. 301, pp. 5.4-8 to 5.4-10.) In both cases, the goal is to prevent a spill from moving off-site and causing harm. Timely and adequate emergency spill response is also a crucial factor. (Ex. 301, pp. 5.4-10, 5.4-17 to 5.4-20.)

Hazardous materials, such as mineral and lubricating oils, cleaning detergents, water conditioners, heat transfer fluid (HTF), and welding gases will be present at the facility during operation. Even though the AMS project will not use natural gas for energy production, natural gas will be supplied to the site (via a connection to an existing natural gas pipeline at the project site boundary) for the auxiliary boiler and domestic uses such as space heating. Operation of the AMS project will also require the transportation of hazardous materials to the facility. Hazardous materials used during the construction phase of the AMS project will include gasoline, diesel fuel, motor oil,

[28] The **Worker Safety** and **Fire Protection** portion of this Decision analyzes the protection of workers from such risks.

hydraulic fluid, welding gases, lubricants, solvents, paint, and paint thinner. No acutely toxic hazardous materials will be used on-site during construction. The hazardous materials expected for use during construction include gasoline, diesel fuel, oil, lubricants, welding gases, and small quantities of solvents and paints. (Exs. 1, pp. 5.6-11 – 5.6-24.)

A list of all hazardous materials proposed for use at the AMS facility is provided in **Hazardous Materials Management Appendix A**.

The evidence includes an assessment of the risks posed by the use of hazardous materials. This assessment included the following elements:

- Review of the types and amounts of chemicals proposed for on-site use, and a determination of the need and appropriateness of their use.
- Removal from further consideration of chemicals that will be used in small amounts, or whose physical state is such that there is virtually no chance that a spill will migrate off the site and impact the public.
- Review and evaluation of measures proposed to prevent spills. These included engineering controls such isolation valves (to allow isolation of individual pipe loops in the event of a leak) and different size transfer-hose couplings, as well as administrative controls such as worker training and safety management programs.
- Review and evaluation of measures proposed to respond to accidents. These measures also included engineering controls such as catchment basins and methods to keep vapors from spreading, as well as administrative controls such as training emergency response crews.
- Analysis of the theoretical impacts on the public of a worst-case spill of hazardous materials, even with the mitigation measures proposed. (Ex. 301, pp. 5.4-1, 5.4-5 - 5.4-8.)

1. Use and Storage of Small and Large Quantity Hazardous Materials

The evidence shows that except for natural gas, HTF, and petroleum, none of the hazardous materials used during construction and operation pose a significant potential for off-site impacts due to the small quantities involved and the substances' relative toxicity, physical state, and/or environmental mobility. (Ex., 301, pp. 5.4-6 - 5.4-7.) Requirements related to the types and amounts of hazardous materials approved for use in association with the AMS project (as identified in **Hazardous Materials Management Appendix A** are specified in Condition of Certification **HAZ-1**.

The project will involve the handling of large amounts of natural gas, with an accompanying risk of fire and explosion. The evidence shows that the project's compliance with applicable codes, which incorporate safety measures such as the use of double block and bleed valves for secure shut off, automated combustion controls, burner management, inspection of welds, and use of corrosion resistant coatings, will adequately minimize the potential for off-site impacts. (Ex. 301, p. 5.4-7.)

The HTF used at the AMS facility will be Therminol VP-1 or an equivalent such as Dowtherm A. Therminol is a synthetic oil comprised of diphenyl ether and biphenyl. (Dowtherm A consists of a similar mixture) and is solid at temperatures below approximately 54° F. It is therefore expected to remain liquid in the event of a spill. While the risk of off-site migration is minimal, Therminol is highly flammable and fires have occurred at other solar generating stations that use it. Approximately 2.3 million gallons of HTF will be contained in the AMS pipes and heat exchanger during project operation.

The properties of Therminol and the record of its previous use at other solar generating facilities have are disclosed in the record, along with data regarding leaks, spills, and fires involving this HTF. The evidence establishes that the placement of an adequate number of isolation valves in the HTF pipe loops throughout the solar array will add significantly to the safety and operational integrity of the entire system, by allowing an individual loop to be closed if a leak develops, rather than closing off the entire HTF system and shutting down the plant. (Ex. 301, pp. 5.4-7 to 5.4-8.) Condition of Certification **HAZ-4**, which requires the project owner to install a sufficient number of isolation valves that are automatically, manually, remotely and/or locally activated, will ensure that HTF leaks do not pose a significant risk.

The evidence further reveals that the Alpha solar field will be bisected by Harper Lake Road, and that the west side of the Alpha solar field will be disconnected from the power block by this road. Since the control room and power block will be located on the east parcel of the Alpha site, several HTF pipes, all command and control systems, and the fire water loop will be required to cross Harper Lake Road or Lockhart Road. Implementation of Condition of Certification **HAZ-7** will ensure that all HTF pipes and associated facilities cross existing roads underground and include appropriate protective devices, and will ensure that roadway crossings by the noted facilities do not pose a significant risk. (Ex. 301, p. 5.4-8.)

Operation of the AMS facility will involve the on-site storage of 10,000 gallons or more of petroleum. Accordingly, the AMS will be required to prepare a Spill Prevention,

Control, and Countermeasure (SPCC) Plan, pursuant to California Health and Safety Code Sections 25270 through 25270.13. These regulations also require that spills or releases of 42 gallons or more be reported to the applicable regulatory bodies. (Ex. 301, pp. 5.4-3, 5.4-10.) These requirements are included in Condition of Certification **HAZ-2** and will ensure implementation of appropriate controls such as spill containment and prevention systems, personnel training, emergency response procedures, and spill notification. This measure will ensure that the proposed on-site use and storage of petroleum does not pose a significant risk.

Various containerized and bulk hazardous materials will be transported to the AMS site via truck. The evidence indicates that, based on considerations including environmental mobility, toxicity, quantity and frequency of deliveries, HTF poses the predominant risk associated with hazardous materials transport. Approximately 2.3 million gallons of HTF would be transported to the project site during the last nine months of construction. This would involve an estimated 374 deliveries during that period (about 10 trucks per week), with each delivery including approximately 6,130 gallons. The risk of an accidental release during HTF transport in the project area was assessed based on criteria such as previous accident data, established accident modeling, and existing regulatory requirements regarding transport of hazardous materials (e.g., standards for vehicle safety and driver qualifications/competence). The evidence shows that, with applicable regulatory conformance, the risk of exposure to significant concentrations of HTF during transportation to the AMS facility is extremely low. (Ex. 301, pp. 5.4-10 - 5.4-12.) Regulatory standards and related requirements associated with the transport, delivery, and security of hazardous materials to/within the AMS site are included in Conditions of Certification **HAZ-2**, **HAZ-3**, **HAZ-5**, **and HAZ-6**. Implementation of these measures will ensure that potential hazardous material exposure risks to the public related to transport and delivery operations will be less than significant.

Thus, we conclude that the AMS project's use and storage of hazardous materials will pose not significant impacts or risks as long as the project implements the mitigation measures proposed by the Applicant and Staff and the adopted Conditions of Certification. These Conditions reflect a Safety Management Program comprised of engineering and administrative controls. (Ex. 301, pp. 5.4-8 – 5.4-10.)

2. Transportation of hazardous Materials

Containerized and bulk hazardous materials will be transported to the facility by truck. The transport of HTF poses the greatest risk but, prior modeling by Staff of spills involving greater quantities of more toxic materials such as aqueous and anhydrous ammonia (neither or which will be used by, stored at, or transported to the AMS site)

demonstrates that minimal airborne concentrations would occur at short distances from the spill. (Ex. 301, p. 5.4-10.)

Nonetheless, liquid hazardous materials can be released during a transportation accident and the extent of the impact in the event of a release depends on the location of the accident and rate of vapor dispersion from the surface of the spill. Staff evaluated the risk of accidental release during transportation using specified data and methodologies. (*Id*.) Staff's modeling results support the conclusion that the risk of exposure to significant concentrations of HTF during transport is insignificant. This primarily because there is a remote possibility that an accidental release of sufficient quantity could be dangerous to the public.

3. Seismic Risk

The AMS site is in a seismically active region, and could potentially be subject to earthquakes that could cause the failure of hazardous material storage facilities and/or solar field piping. An analysis of potential seismic risks at the AMS site was conducted based on data from historic earthquake events, related damage to storage and pipeline facilities, the proposed use of flexible pipeline connectors (e.g., ball joints) and isolation valves (as previously described), and project-related conformance with applicable regulatory requirements (e.g., seismic parameters of the California Building Code). The evidence indicates that storage facility and/or pipeline failures at the AMS site from seismic events are not probable, and do not represent a significant risk to the public. Additional discussion of potential seismic concerns and related design features is provided in the **Geological Resources** and **Facility Design** sections of this Decision. (Exs. 1, p. 5.6-25.; 301, p. 5.4-12.)

4. Site Security

Because the AMS project use and store large quantities of hazardous materials, site security is essential even though the site is deemed "low vulnerability" based on a regulatory-based vulnerability assessment. The evidence identifies site security measures for this project commensurate with its level of vulnerability and consistent with measures at all power plants under Energy Commission jurisdiction, to provide a minimum level of security consistent with the noted regulatory guidelines. (Ex. 301, pp. 5.4-13 -5.4-14.) These measures include perimeter fencing, security guards, and access controls, as well as establishing protocols for monitoring/reporting suspicious activities and site evacuation. Site access must be strictly controlled. Conditions of Certification **HAZ-5** and **HAZ-6** set forth the required security measures.

HAZARDOUS MATERIALS
APPENDIX A

Hazardous Materials Proposed for Use at AMS

During Operations

Hazardous Materials Management Appendix A
Hazardous Materials Proposed for Use at AMS During Operations

Material	CAS No.	Application	Hazardous Characteristics	Maximum Quantity On Site	CERCLA SARA RQ[a]
Acetylene	74-86-2	Welding gas	Health: hazardous if inhaled Physical: combustible, flammable	1,600 cubic feet	N/A
Air Conditioning Fluids	None			40 pounds	N/A
Argon	7440-37-1	Welding gas	Health: low toxicity Physical: non reactive	1,600 cubic feet	N/A
Bathroom Supplies – Liquid Soap	None			25 gallons	N/A
Chem Treat, Inc. BL-1260 or similar Carbohydrazide	497-18-7		Health: moderate toxicity	Totes, 4 x 300 gallons	N/A
ChemTreat, Inc. BL-1558 or similar 3-Methoxyproplyamine Cyclohexlyamine Diethydroxylamine	 5332-73-0 108-91-8 3710-84-7		Health: high toxicity Physical: corrosive, combustible	Totes, 4 x 300 gallons	 N/A 10,000 pounds N/A
ChemTreat, Inc. BL-180 or similar Nitrous Acid, Sodium Salt Sodium Tetraborate Pentahydrate	 7632-00-0 12179-04-3		Health: moderate toxicity	Totes, 2 x 300 gallons	 100 pounds N/A

Material	CAS No.	Application	Hazardous Characteristics	Maximum Quantity On Site	CERCLA SARA RQ[a]
ChemTreat, Inc. CL-1432 or similar Potassium Phosphate, Tribasic 1-Hydroxyethylidene-1, 1-Diphosphonic Acid, Tetrapotassium Salt Tetrapotassium Pyrophosphate Potassium Hydroxide Tolytriazole, Sodium Salt	 7778-53-2 14860-53-8 7320-34-5 1310-58-3 64665-57-2		Health: high toxicity Physical: corrosive	Totes, 2 x 1,000 gallons	 N/A N/A N/A 1,000 pounds N/A
ChemTreat, Inc. BL-124 or similar Sodium Bisulfite	7631-90-5		Health: low toxicity, irritant	Totes, 2 x 300 gallons	5,000 pounds
ChemTreat, Inc. BL-1794 or similar Trisodium Phosphate	7601-54-9		Health: high toxicity Physical: corrosive	Plastic Totes, 2 x 300 gallons	N/A
Cleaning Chemicals (Janitorial Supplies)	None	Periodic cleaning of combustion turbine	Health: various Physical: various	20 gallons	NA
Diesel Fuel			Health: low toxicity Physical: combustible	14,200 gallons	N/A
Fertilizer (Bioremediation) Urea	57-13-6 1317-25-5		Health: low toxicity	300 pounds	N/A
Fertilizer (Bioremediation)	7778-77-0		Health: low toxicity	2,000 pounds	N/A

Material	CAS No.	Application	Hazardous Characteristics	Maximum Quantity On Site	CERCLA SARA RQ[a]
Monopotassium Phosphate			Physical: combustible		
Gasoline	86290-81-5			1,000 – 2,000 gallons	N/A
Heat Transfer Fluid: Diphenyl Ether (73.5%) Biphenyl (26.5%)	101-84-8 92-52-4	Heat transfer from solar array to steam generator	Health: moderately toxic, skin irritant Physical: combustible	2,292,000 gallons	100 pounds
Herbicide Roundup® or equivalent (Glyphosate, Isopropylamine Salt)	38641-94-0		Health: low toxicity, irritant	No onsite storage, brought on site by licensed contractor, used immediately	N/A
Herbicides and Pesticides	None			5 gallons	N/A
Lab Gases	None			150 cubic feet	N/A
Lab Reagents	None			10 gallons	N/A
Lube Oil	64742-55-8	Lubricate rotating equipment	Health: hazardous if ingested Physical: may be flammable/combustible	5,00 gallons in equipment and piping, additional maintenance inventory of up to 550 gallons in 55-gallon steel drums	N/A
Mineral Insulating Oil	64742-53-6 68037-01-4	Transformers/switchyard	Health: hazardous if ingested Physical: may be flammable/combustible	64,000 gallons	N/A
Natural Gas (Methane)	74-82-8	Auxiliary boiler and domestic use (space heating)	Health: low toxicity Physical: flammable	No on-site storage, natural gas in equipment and piping; pressurized carbon steel pipeline for delivery to site	N/A
Nitrogen	7727-37-9			37,200 gallons	N/A
Office Supplies (Batteries, etc)	None			1 cubic foot	N/A
Oxygen	7782-44-7	Welding gas	Health: low toxicity, skin irritant Physical: flammable	3,200 cubic feet	NA

Material	CAS No.	Application	Hazardous Characteristics	Maximum Quantity On Site	CERCLA SARA RQ[a]
Paint and Paint Thinners	Various	Touchup of painted surfaces	Health: various Physical: various	50 gallons	NA
Propane	74-98-6	Torch gas	Health: low toxicity, causes frostbites Physical: flammable, oxidizing	5,000 gallons	NA
Sodium Hydroxide	1310-73-2	Water treatment	Health: high toxicity Physical: corrosive	2,000 gallons	1,000 pounds
Sodium Hypochlorite	7681-52-9 10022-70-5	Water treatment	Health: low toxicity Physical: corrosive, flammable	12,000 gallons	100 pounds
Soil Stabilizer Coherex or similar	64742-11-6		None	No onsite storage, supplied in 400-gallon totes, used immediately	N/A
Sulfuric Acid (29.5%)	7664-93-9 8014-95-7	Water treatment	Health: high toxicity Physical: corrosive and water reactive	2,000 gallons	1,000 pounds
Sulfuric Acid (93%)	7664-93-9 8014-95-7	Water treatment	Health: high toxicity Physical: corrosive and water reactive	1,600 gallons	1,000 pounds
Water Treatment Chemical ChemTreat, Inc. CT-9004 or similar 1-Hydroxyethylidene-1, 1-Diphosphonic Acid	2809-21-4			Totes, 2 x 300 gallons	N/A
Water Treatment Chemical ChemTreat, Inc. P-813 E or similar Petroleum Distillate Hydrotreated	64742-47-8		None	Totes, 2 x 275 gallons	N/A

Material	CAS No.	Application	Hazardous Characteristics	Maximum Quantity On Site	CERCLA SARA RQ[a]
Light					
Water Treatment Chemical ChemTreat, Inc. CL-2156 or similar 5-Chloro-2-Methyl-4-Isothiazolin-3-One 2-Methyl-4-Isothiazolin-3-One Magnesium Nitrate Magnesium Chloride	 26172-55-4 2682-20-4 10377-60-3 7786-30-3		Physical: corrosive	Totes, 2 x 300 gallons	 N/A N/A N/A N/A
Welding Rods	7439-89-6			100 pounds	N/A

Source: ESH 2009c Tables 9 and 10 and AS 2009a Table 5.6-3

a. Reportable quantities for a pure chemical, per the Comprehensive Environmental Response, Compensation, and Liability Act.

Appendix C.4

Health Risk Assessment Support Data

Health Risk Assessment Process, Goals, Assumptions, and Uses

"In recent years, the public has become increasingly aware of the presence of harmful chemicals in our environment. Many people express concerns about pesticides and other foreign substances in food, contaminants in drinking water, and toxic pollutants in the air. Others believe these concerns are exaggerated or unwarranted. How can we determine which of these potential hazards really deserve attention? How do we, as a society, decide where to focus our efforts and resources to control these hazards? When we hear about toxic threats that affect us personally, such as the discovery of industrial waste buried in our neighborhood or near our children's school, how concerned should we be?

Health risk assessment is a scientific tool designed to help answer these questions. Government agencies rely on risk assessments to help them determine which potential hazards are the most significant. Risk assessments can also guide regulators in abating environmental hazards. Members of the public who learn the basics of risk assessment can improve their understanding of both real and perceived environmental hazards, and they can work more effectively with decision makers on solutions to environmental problems.

Chemicals can be either beneficial or harmful, depending on a number of factors, such as the amounts to which we are exposed. Low levels of some substances may be necessary for good health, but higher levels may be harmful. Health risk assessments are used to determine if a particular chemical poses a significant risk to human health and, if so, under what circumstances. Could exposure to a specific chemical cause significant health problems? How much of the chemical would someone have to be exposed to before it would be dangerous? How serious could the health risks be? What activities might put people at increased risk?

If it were possible to prevent all human exposure to all hazardous chemicals, there would be no need for risk assessment. However, the total removal of harmful pollutants from the environment is often infeasible or impossible, and many naturally occurring substances also pose health risks. Risk assessment helps scientists and regulators identify serious health hazards and determine realistic goals for reducing exposure to toxics so that there is no significant health threat to the public.

Estimating the hazards posed by toxic chemicals in the environment involves the compilation and evaluation of complex sets of data. Government regulators, therefore, turn to specialists to perform or assist with risk assessments. These specialists include scientists with degrees in toxicology (the study of the toxic effects of chemicals) and epidemiology (the study of disease or illness in populations) as well as physicians, biologists, chemists, and engineers.

The term "health risk assessment" is often misinterpreted. People sometimes think that a risk assessment will tell them whether a current health problem or symptom was caused by exposure

to a chemical. This is not the case. Scientists who are searching for links between chemical exposures and health problems in a community may conduct an epidemiologic study. These studies typically include a survey of health problems in a community and a comparison of health problems in that community with those in other cities, communities, or the population as a whole.

Although they are both important, health risk assessments and epidemiologic studies have different objectives. Most epidemiologic studies evaluate whether *past* chemical exposures may be responsible for documented health problems in a specific group of people. In contrast, health risk assessments are used to estimate whether current or future chemical exposures will pose health risks to a broad population, such as a city or a community. Scientific methods used in health risk assessment cannot be used to link individual illnesses to past chemical exposures, nor can health risk assessments and epidemiologic studies prove that a specific toxic substance caused an individual's illness.

The U.S. Environmental Protection Agency (U.S. EPA) is a leading risk assessment agency at the federal level. In California, the Office of Environmental Health Hazard Assessment (OEHHA) in the California Environmental Protection Agency (Cal/EPA) has the primary responsibility for developing procedures and practices for performing health risk assessments. Other agencies within Cal/EPA, such as the Department of Pesticide Regulation and the Department of Toxic Substances Control, have extensive risk assessment programs of their own but work closely with OEHHA.

The Department of Pesticide Regulation uses risk assessments to make regulatory decisions concerning safe pesticide uses. The Department of Toxic Substances Control uses risk assessments to determine requirements for the management and cleanup of hazardous wastes. OEHHA's health risk assessments are used by the Air Resources Board to develop regulations governing toxic air contaminants, and by the Department of Health Services to develop California's drinking water standards. These agencies' decisions take into account the seriousness of potential health effects along with the economic and technical feasibility of measures that can reduce the health risks.

Health risk assessment requires both sound science and professional judgment and is a constantly developing process. Cal/EPA is nationally recognized for developing new procedures that improve the accuracy of risk assessments. Cal/EPA also works closely with U.S. EPA in all phases of risk assessment.

The risk assessment process is typically described as consisting of four basic steps: hazard identification, exposure assessment, dose-response assessment, and risk characterization. Each of these steps will be explained in the following text.

Hazard Identification

In the first step, hazard identification, scientists determine the types of health problems a chemical could cause by reviewing studies of its effects in humans and laboratory animals. Depending on the chemical, these health effects may include short-term ailments, such as headaches; nausea; and eye, nose, and throat irritation; or chronic diseases, such as cancer. Effects on sensitive populations, such as pregnant women and their developing fetuses, the elderly, or those with health problems

(including those with weakened immune systems), must also be considered. Responses to toxic chemicals will vary depending on the amount and length of exposure. For example, short-term exposure to low concentrations of chemicals may produce no noticeable effect, but continued exposure to the same levels of chemicals over a long period of time may eventually cause harm. An important step in hazard identification is the selection of key research studies that can provide accurate, timely information on the hazards posed to humans by a particular chemical. The selection of a study is based upon factors such as whether the study has been peer reviewed by qualified scientists, whether the study's findings have been verified by other studies, and the species tested (human studies provide the best evidence). Some studies may involve humans that have been exposed to the chemical, while others may involve studies with laboratory animals.

Human data frequently are useful in evaluating human health risks associated with chemical exposures. Human epidemiologic studies typically examine the effects of chemical exposure on a large number of people, such as employees exposed to varying concentrations of chemicals in the workplace. In many cases, these exposures took place prior to the introduction of modern worker-safety measures.

One weakness of occupational studies is that they generally measure the effects of chemicals on healthy workers and do not consider children, the elderly, those with pre-existing medical conditions, or other sensitive groups. Since occupational studies are not controlled experiments, there may be uncertainties about the amount and duration of exposure or the influence of lifestyle choices, such as smoking or alcohol use, on the health of workers in the studies. Exposure of workers to other chemicals at the same time may also influence and complicate the results.

Laboratory studies using human volunteers are better able to gauge some health effects because chemical exposures can then be measured with precision. But these studies usually involve small numbers of people and, in conformance with ethical and legal requirements, use only adults who agree to participate in the studies. Moreover, laboratory studies often use simple measurements that identify immediate responses to the chemical but might miss significant, longer-term health effects. Scientists can also use physicians' case reports of an industrial or transportation accident in which individuals were unintentionally exposed to a chemical. However, these reports may involve very small numbers of people, and the level of exposure to the chemical could be greater than exposures to the same chemical in the environment. Nevertheless, human studies are preferred for risk assessment, so OEHHA makes every effort to use them when they are available.

Because the effects of the vast majority of chemicals have not been studied in humans, scientists must often rely on animal studies to evaluate a chemical's health effects. Animal studies have the advantage of being performed under controlled laboratory conditions that reduce much of the uncertainty related to human studies. If animal studies are used, scientists must determine whether a chemical's health effects in humans are likely to be similar to those in the animals tested. Although effects seen in animals can also occur in humans, there may be subtle or even significant differences in the ways humans and experimental animals react to a chemical. Comparison of human and animal metabolism may be useful in selecting the animal species that should be studied, but it is often not possible to determine which species is most like humans in its response to a chemical exposure. However, if similar effects were found in more than one species, the results would strengthen the evidence that humans may also be at risk.

Exposure Assessment

In exposure assessment, scientists attempt to determine how long people were exposed to a chemical; how much of the chemical they were exposed to; whether the exposure was continuous or intermittent; and how people were exposed—through eating, drinking water and other liquids, breathing, or skin contact. All of this information is combined with factors such as breathing rates, water consumption, and daily activity patterns to estimate how much of the chemical was taken into the bodies of those exposed.

People can be exposed to toxic chemicals in various ways. These substances can be present in the air we breathe, the food we eat, or the water we drink. Some chemicals, due to their particular characteristics, may be both inhaled and ingested. For example, airborne chemicals can settle on the surface of water, soil, leaves, fruits, vegetables, and forage crops used as animal feed. Cows, chickens, or other livestock can become contaminated when eating, drinking, or breathing the chemicals present in the air, water, feed, and soil. Fish can absorb the chemicals as they swim in contaminated water or ingest contaminated food. Chemicals can be absorbed through the skin, so infants and children can be exposed simply by crawling or playing in contaminated dirt. They can also ingest chemicals if they put their fingers or toys in their mouths after playing in contaminated dirt. Chemicals can also be passed on from nursing mothers to their children through breast milk.

To estimate exposure levels, scientists rely on air, water, and soil monitoring; human blood and urine samples; or computer modeling. Although monitoring of a pollutant provides excellent data, it is time consuming, costly, and typically limited to only a few locations. For those reasons, scientists often rely on computer modeling, which uses mathematical equations to describe how a chemical is released and to estimate the speed and direction of its movement through the surrounding environment. Modeling has the advantage of being relatively inexpensive and less time consuming, provided all necessary information is available and the accuracy of the model can be verified through testing.

Computer modeling is often used to assess chemical releases from industrial facilities. Such models require information on the type of chemicals released, facilities' hours of operation, industrial processes that release the chemicals, smokestack height and temperature, any pollution-control equipment that is used, surrounding land type (urban or rural), local topography and meteorology, and census data regarding the exposed population.

In all health risk assessments, scientists must make assumptions in order to estimate human exposure to a chemical. For example, scientists assessing the effects of air pollution may need to make assumptions about the time people spend outdoors, where they are more directly exposed to pollutants in the ambient air, or the time they spend in an area where the pollution is greatest. An assessment of soil contamination may require scientists to make assumptions about people's consumption of fruits and vegetables that may absorb soil contaminants.

To avoid underestimating actual human exposure to a chemical, scientists often look at the range of possible exposures. For example, people who jog in the afternoon, when urban air pollution levels are highest, would have much higher exposures to air pollutants than people who come home after work and relax indoors. Basing an exposure estimate on a value near the higher end of

a range of exposure levels (closer to the levels experienced by the jogger than by the person remaining indoors) provides a realistic worst-case estimate of exposure. These kinds of conservative assumptions, which presume that people are exposed to the highest amounts of a chemical that can be considered credible, are referred to as "health-protective" assumptions.

Dose-Response Assessment

In dose-response assessment, scientists evaluate the information obtained during the hazard identification step to estimate the amount of a chemical that is likely to result in a particular health effect in humans.

An established principle in toxicology is that "the dose makes the poison." For example, a commonplace chemical like table salt is harmless in small quantities, but it can cause illness in large doses. Similarly, hydrochloric acid, a hazardous chemical, is produced naturally in our stomachs but can be quite harmful if taken in large doses.

Scientists perform a dose-response assessment to estimate how different levels of exposure to a chemical can impact the likelihood and severity of health effects. The dose-response relationship is often different for many chemicals that cause cancer than it is for those that cause other kinds of health problems.

Cancer Effects

For chemicals that cause cancer, the general assumption in risk assessment has been that there are no exposures that have "zero risk" unless there is clear evidence otherwise. In other words, even a very low exposure to a cancer-causing chemical may result in cancer if the chemical happens to alter cellular functions in a way that causes cancer to develop. Thus, even very low exposures to carcinogens might increase the risk of cancer, if only by a very small amount.

Several factors make it difficult to estimate the risk of cancer. Cancer appears to be a progressive disease because a series of cellular transformations is thought to occur before cancer develops. In addition, cancer in humans often develops many years after exposure to a chemical. Also, the best information available on the ability of chemicals to cause cancer often comes from studies in which a limited number of laboratory animals are exposed to levels of chemicals that are much higher than the levels humans would normally be exposed to in the environment. As a result, scientists use mathematical models based on studies of animals exposed to high levels of a chemical to estimate the probability of cancer developing in a diverse population of humans exposed to much lower levels. The uncertainty in these estimates may be rather large. To reduce these uncertainties, risk assessors must stay informed of new scientific research. Data from new studies can be used to improve estimates of cancer risks.

Non-cancer Effects

Non-cancer health effects (such as asthma, nervous system disorders, birth defects, and developmental problems in children) typically become more severe as exposure to a chemical increases. One goal of dose-response assessment is to estimate levels of exposure that pose only a low or negligible risk for non-cancer health effects. Scientists analyze studies of the health effects of a chemical to develop this estimate. They take into account such factors as the quality of the scientific studies, whether humans or laboratory animals were studied, and the degree to which some people may be more sensitive to the chemical than others. The estimated level of exposure

that poses no significant health risks can be reduced to reflect these factors.

Risk Characterization

The last step in risk assessment brings together the information developed in the previous three steps to estimate the risk of health effects in an exposed population. In the risk characterization step, scientists analyze the information developed during the exposure and dose-response assessments to describe the resulting health risks that are expected to occur in the exposed population. This information is presented in different ways for cancer and non-cancer health effects, as explained below.

Cancer Risk

Cancer risk is often expressed as the maximum number of new cases of cancer projected to occur in a population of one million people due to exposure to the cancer-causing substance over a 70-year lifetime. For example, a cancer risk of one in one million means that in a population of one million people, not more than one additional person would be expected to develop cancer as the result of the exposure to the substance causing that risk.

An individual's actual risk of contracting cancer from exposure to a chemical is often less than the theoretical risk to the entire population calculated in the risk assessment. For example, the risk estimate for a drinking-water contaminant may be based on the health-protective assumption that the individual drinks two liters of water from a contaminated source daily over a 70-year lifetime. However, an individual's actual exposure to that contaminant would likely be lower due to a shorter time of residence in the area. Moreover, an individual's risk not only depends on the individual's exposure to a specific chemical but also on his or her genetic background (i.e., a family history of certain types of cancer); health; diet; and lifestyle choices, such as smoking or alcohol consumption.

Cancer risks presented in risk assessments are often compared to the overall risk of cancer in the general U.S. population (about 250,000 cases for every one million people) or to the risk posed by all harmful chemicals in a particular medium, such as the air. The cancer risk from breathing current levels of pollutants in California's ambient air over a 70-year lifetime is estimated to be 760 in one million.

Non-cancer Risk

Non-cancer risk is usually determined by comparing the actual level of exposure to a chemical to the level of exposure that is not expected to cause any adverse effects, even in the most susceptible people. Levels of exposure at which no adverse health effects are expected are called "health reference levels," and they generally are based on the results of animal studies. However, scientists usually set health reference levels much lower than the levels of exposure that were found to have no adverse effects in the animals tested. This approach helps to ensure that real health risks are not underestimated by adjusting for possible differences in a chemical's effects on laboratory animals and humans; the possibility that some humans, such as children and the elderly, may be particularly sensitive to a chemical; and possible deficiencies in data from the animal studies.

Depending on the amount of uncertainty in the data, scientists may set a health reference level 100 to 10,000 times lower than the levels of exposure observed to have no adverse effects in

animal studies. Exposures above the health reference level are not necessarily hazardous, but the risk of toxic effects increases as the dose increases. If an assessment determines that human exposure to a chemical exceeds the health reference level, further investigation is warranted.

Risk managers rely on risk assessments when making regulatory decisions, such as setting drinking water standards, or developing plans to clean up hazardous waste sites. Risk managers are responsible for protecting human health, but they must also consider public acceptance, as well as technological, economic, social, and political factors, when arriving at their decisions. For example, they may need to consider how much it would cost to remove a contaminant from drinking water supplies or how seriously the loss of jobs would affect a community if a factory were to close due to the challenge of meeting regulatory requirements that are set at the most stringent level.

Health risk assessments can help risk managers weigh the benefits and costs of various alternatives for reducing exposure to chemicals. For example, a health risk assessment of a hazardous waste site could help determine whether placing a clay cap over the waste to prevent exposure would offer the same health protection as the more costly option of removing the waste from the site.

One of the most difficult questions of risk management is: How much risk is acceptable? While it would be ideal to completely eliminate all exposure to hazardous chemicals, it is usually not possible or feasible to remove all traces of a chemical once it has been released into the environment. The goal of most regulators is to reduce the health risks associated with exposure to hazardous pollutants to a negligibly low level.

Regulators generally presume that a one-in-one million risk of cancer from life-long exposure to a hazardous chemical is an "acceptable risk" level because the risk is extremely low compared to the overall cancer rate. If a drinking water standard for a cancer-causing chemical were set at the level posing a "one-in-one million" risk, it would mean that not more than one additional cancer case (beyond what would normally occur in the population) would potentially occur in a population of one million people drinking water meeting that standard over a 70-year lifetime.

Actual regulatory standards for chemicals or hazardous waste cleanups may be set at less stringent risk levels, such as one in 100,000 (not more than one additional cancer case per 100,000 people) or one in 10,000 (not more than one additional cancer case per 10,000 people). These less stringent risk levels are often due to economic or technological considerations. Regulatory agencies generally view these higher risk levels to be acceptable if there is no feasible way to reduce the risks further."[1]

The exposure and dose-response estimates for the project analysis were conducted using HARP (Version 1.4a).

[1] A Guide to Health Risk Assessment, CalEPA-Office of Environmental Health Hazard Assessment, 1001 I Street, Sacramento, Ca. 95812, (est. 2001).

The following tables summarize the results of the HRA performed by the proposed MS1 facility.

TABLE C.4-1 CRITERIA AND AIR TOXIC POLLUTANTS EMITTED FROM MS1 FACILITY	
NOx	Diesel Particulate Matter
CO	Metals (Cooling Tower)
VOC*	Acetaldehyde
SOx	Acrolein
PM10/PM2.5	Benzene
1-3 Butadiene	Ethylbenzene
Formaldehyde	Hexane
PAHs	Naphthalene
Propylene	Propylene Oxide
Toluene	Xylenes

TABLE C.4-2 HEALTH EFFECTS SIGNIFICANT THRESHOLD LEVELS		
	Significance Thresholds	
Agency	**MDAQMD**	**State of California**
Cancer Risk per million	Moderate Risk >1 x 10^{-6} Significant Risk >=100 X 10^{-6} HI >= 10 Significant Health Risk >=10 x 10^{-6} HI >= 1	<= 1.0 without T-BACT <= 10.0 with T-BACT
Acute HI		1.0
Chronic HI		1.0
Cancer Burden		1.0

No specific health related studies were identified which pertain to the local project area for any identified toxic air pollutant or identified specific population.

The other assumptions used in running the HARP program were as follows:

- Emission rates for non-criteria pollutants are taken from AFC Section 5.2, and from Appendix C.1.
- Number of residents affected is based upon the updated 2000 population data for those census tracts or portions of census tracts which lie within the maximum impact receptor radius of the proposed facility.
- All receptors were treated as residential receptors, which allows for the assumption that the MIR, if assumed residential, will represent the highest risk and no other receptor will show risks higher than the MIR. This deletes the need for running worker risks. The HARP risk run options as recommended by South Coast AQMD (Chico, 10-20-05) were utilized (i.e., for cancer – 70-year and derived adjusted method; for chronic – 70-year and derived OEHHA method; for acute – no options).
- Deposition velocity is taken to be 0.02 m/s, as recommended by ARB for controlled emission sources.
- Fraction of residents with gardens is taken to be 0.15 which is likely conservatively high for the rural (desert) area near the project site.
- Fraction of produce grown at home is taken to be 0.15, which is also likely to be conservatively high for the rural (desert) area near the project site.

The HARP program is a tool that assists with the programmatic requirements of the Air Toxics Hot Spots Program, and it can be used for preparing health risk assessments for other related programs such as air toxic control measure development or facility permitting applications. HARP is a computer based risk assessment program which combines the tools of emission inventory database, facility prioritization, air dispersion modeling, and risk assessment analysis. Use of HARP promotes statewide consistency in the area of risk assessment, increases the efficiency of evaluating potential health impacts, and provides a cost effective tool for developing facility health risk assessments. HARP may be used on single sources, facilities with multiple sources, or multiple facilities in close proximity to each other. The receptor grid used in HARP was the same as the grid used in the air quality impact analysis (AERMOD). The AERMOD files used in the HARP analysis were processed via the HARP On-Ramp program.

The HARP program results for acute and chronic inhalation and chronic non-inhalation exposures, cancer burden and individual cancer risk (workplace and residential) for the proposed sources are included in this Appendix.

The modeling results show that the maximum modeled cancer risk (MIR) from MS1 is expected to be 2.59xE^{-7}. This risk is well below the ten in one million level (with T-BACT), and the MDAQMD significance value. The chronic and acute non-cancer hazard indices are 0.00208 and 0.0101, respectively (at the cancer MIR location). Both are well below the significant impact level of 1.0. The MIR was located offsite approximately 453 feet from the site grid center. At this radius there are no impacted populations, therefore the total cancer burden was calculated to be 0.0, which is also well below the state threshold value of 1.0, as well as being below the MDAQMD Rule 1320 significance level of 0.5. Detailed calculations and results for each significant receptor are included in the modeling results, which are being submitted electronically.

TABLE C.4-3 HEALTH RISK ASSESSMENT SUMMARY (MIR)

Stationary Sources Only		
Risk Category	**Facility Values**	**Applicable Significance Threshold**
Cancer Risk	2.59 E-7	<= 10.0 E-6
Chronic Hazard Index	0.00208	1.0
Acute Hazard Index	0.0101	1.0
Cancer Burden	0	0.5

Facility MIR location coordinates are: Cancer risk and chronic MIR – 469945mE, 3874500mN
Acute MIR location coordinates are: Acute MIR – 469945mE, 3874500mN

The calculated health effects as summarized above do not exceed the district significance threshold values, therefore the health effects would be considered "not significant" and may even be "zero". These HRA results are also provided on the air modeling CD. Due to length of the results output files, hard copies are not included in this appendix.

Table C.4-4, Figures C.4-1 to C.4-3 and the Phase I Environmental Investigation is on file with the US Department of Energy at the following website: http://lpo.energy.gov/?page_id=1514

APPENDIX Q

TRAFFIC

Appendix Q: Transportation

Table Q-1: Signalized Intersection Level of Service: Highway Capacity Manual Operational Analysis Method

Average Control Delay (seconds/vehicle)	Level of Service (LOS) Characteristics
<10	*LOS A* describes operations with very low delay. This occurs when progression is extremely favorable, and most vehicles do not stop at all. Short cycle lengths may also contribute to low delay.
>10– 20	*LOS B* describes operations with generally good progression and/or short cycle lengths. More vehicles stop than for LOS A, causing higher levels of average delay.
>20 – 35	*LOS C* describes operations with higher delays, which may result from fair progression and/or longer cycle lengths. Individual cycle failures may begin to appear at this level. The number of vehicles stopping is significant at this level, although many still pass through the intersection without stopping.
>35– 55	*LOS D* describes operations with high delay, resulting from some combination of unfavorable progression, long cycle lengths, or high volumes. The influence of congestion becomes more noticeable, and individual cycle failures are noticeable.
>55 – 80	*LOS E* is considered the limit of acceptable delay. Individual cycle failures are frequent occurrences.
>80	*LOS F* describes a condition of excessively high delay, considered unacceptable to most drivers. This condition often occurs when arrival flow rates exceed the LOS D capacity of the intersection. Poor progression and long cycle lengths may also be major contributing causes to such delay.

Source: 2000 Highway Capacity Manual, TRB Special Report 209

Table Q-2: Level of Service Criteria for Stop Controlled Unsignalized Intersections

Average Control Delay (sec/veh)	Level of Service (LOS)
≤10	A
>10 and ≤15	B

>15 and ≤25	C
>25 and ≤35	D
>35 and ≤50	E
>50	F

Source: 2000 Highway Capacity Manual, TRB Special Report 209

Description of the ILV capacity characteristics

Table Q-3: Ramp Junction Capacity Analysis: Near-Term Base Conditions

Ramp Junction	Peak Hour	ILV / Hour	Description
Main Street/SR-58 NB Ramps	AM	474	*<1200: (Under Capacity)*
	PM	558	*<1200: (Under Capacity)*
Main Street/SR-58 SB Ramps	AM	371	<1200: (Under Capacity)
	PM	547	<1200: (Under Capacity)

Source: Wilson & Company, Inc., Engineers & Architects; June 2009

Table Q-4: Project Trips Generation: Construction Phase – Peak Hours

Peak Period	Project Site		Park-and-Ride	
	Trips (In/Out)	PCE	Trips (In/Out)	PCE
AM (car)	300/0	300/0	169/0	169/0
AM (bus)	3/3	9/9	3/3	9/9
AM (Total)	**N/A**	**309/9**	**N/A**	**178/9**
PM (car)	0/300	0/300	0/169	0/169
PM (bus)	3/3	9/9	3/3	9/9
PM (total)	**N/A**	**9/309**	**N/A**	**9/178**

Source: Wilson & Company, Inc., Engineers & Architects; June 2009

Figure Q-1: Heavy Haul Routes

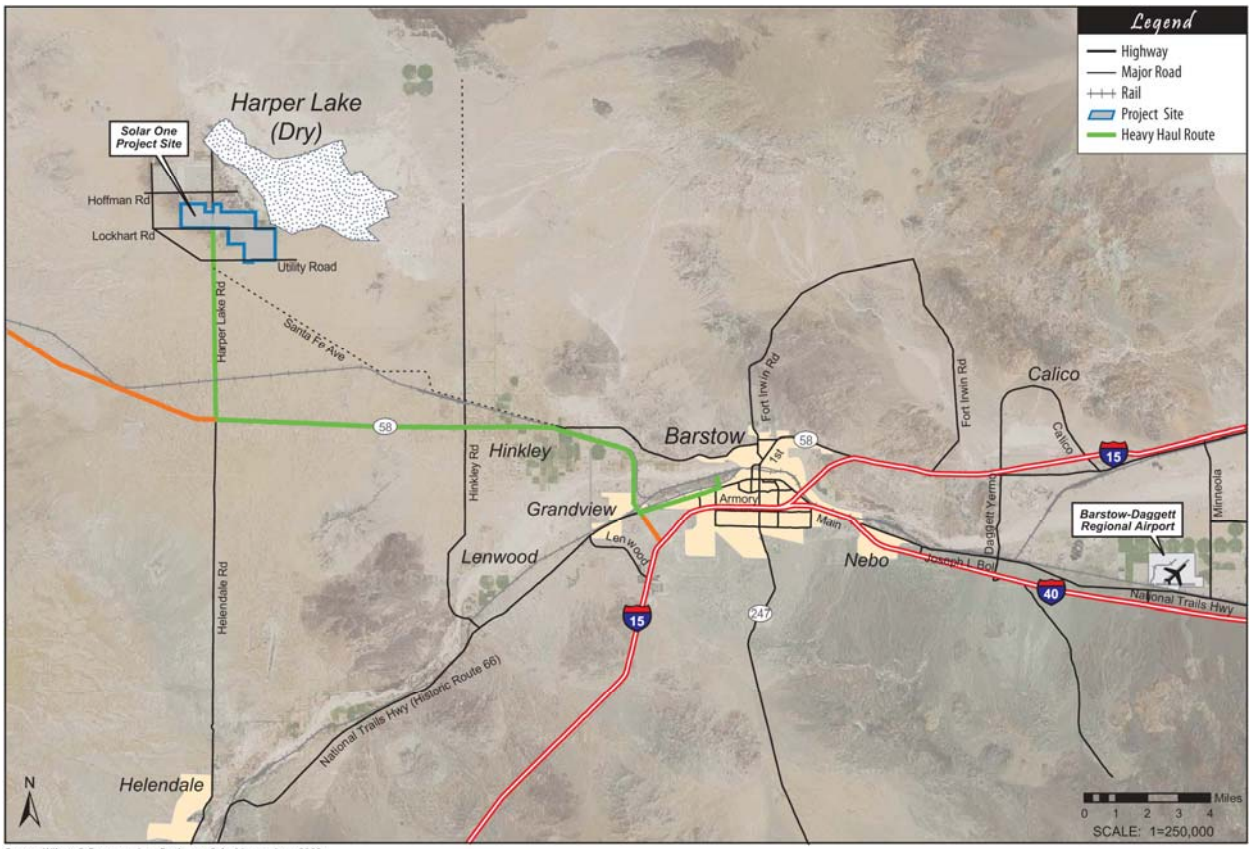

Source: Wilson & Company, Inc., Engineers & Architects; June 2009

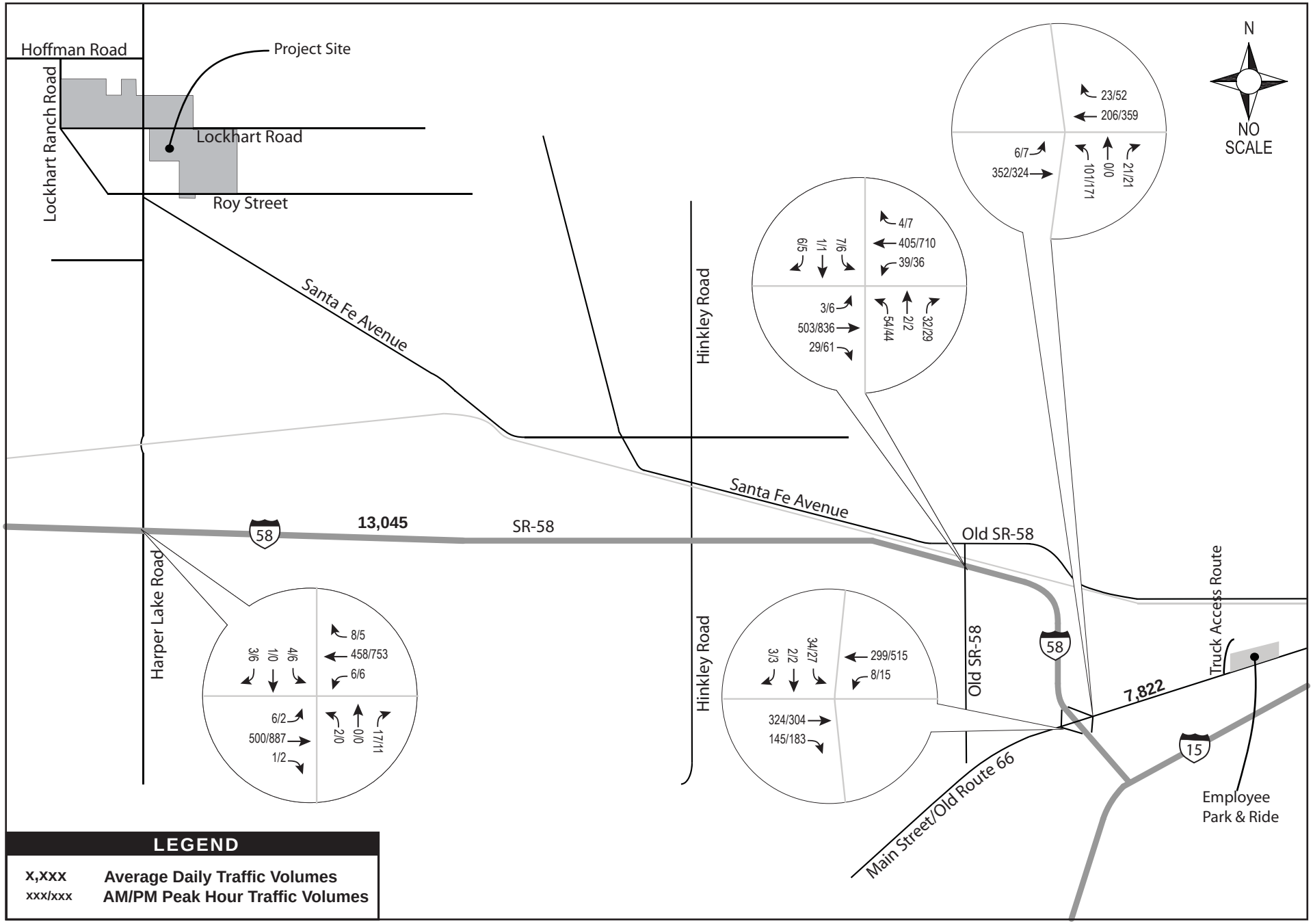

SOURCE: Wilson & Company, Inc., Engineers & Architects; June 2009

WILSON & COMPANY ENGINEERS & ARCHITECTS

Mojave Solar Project

Figure 5.13-8
Near Term Base
Traffic Volumes

Q-4

APPENDIX R

CORRESPONDENCE

STATE OF CALIFORNIA ARNOLD SCHWARZENEGGER, *Governor*

PUBLIC UTILITIES COMMISSION
320 WEST 4TH STREET, SUITE 500
LOS ANGELES, CA 90013

July 30, 2010

Carol Hammel-Smith
U.S. Department of Energy
1000 Independence Avenue, SW
LP-10
Washington, DC 20585

Dear Ms. Hammel-Smith:

Re: SCH# 2010074001; Abengoa Solar Project

The California Public Utilities Commission (Commission) has jurisdiction over the safety of highway-rail crossings (crossings) in California. The California Public Utilities Code requires Commission approval for the construction or alteration of crossings and grants the Commission exclusive power on the design, alteration, and closure of crossings.

The Commission's Rail Crossings Engineering Section (RCES) is in receipt of the *Notice of Completion & Environmental Document Transmittal – Intent to Prepare an Environmental Assessment (EA)* from the State Clearinghouse for the proposed Abengoa Solar Project near the City of Hinkley. RCES has the following concerns:

- The proposed project site is located approximately 9 miles northwest of the City of Hinkley. There are two nearby at-grade crossings, one on SR 395 (DOT #: 028208V) and the other on SR 58 (DOT #:028209C) that might be traversed to access to the project site. RCES staff has received numerous near miss reports from BNSF Railway Company at both locations. Also, at both highway rail crossing locations, there has also been several incidents that involve trucks.

- RCES is also concerned with the cumulative impacts of the traffic, especially with the truck traffic for both crossings. RCES in the last year has submitted comments to two solar projects near the City of Hinkley and Kramer Junction. The two RCES comment letters are attached for your reference.

RCES staff recommends that the Department of Energy include the two nearby crossings in their traffic impact and safety assessment as part of the EA and if possible propose safety measures at both crossings due to the increased truck volume. Safety measures to consider include, but are not limited to, the planning for grade separation and improvements to the existing at-grade crossings.

The Department of Energy should arrange a meeting with the Commission's RCES, and the BNSF Railway Company to discuss relevant safety issues and if necessary, file a GO 88-B application request for authority to modify an at-grade crossings. Before the schedule meeting, RCES would like to review the traffic study for the project when available.

If you have any questions, please contact me at 213-576-1399 or email at bll@cpuc.ca.gov.

Sincerely,

Bill Lay, P.E.
Utilities Engineer
Rail Crossings Engineering Section
Consumer Protection & Safety Division

cc: Melvin Thomas, BNSF

DEPARTMENT OF THE ARMY
915 Wilshire Boulevard
Los Angeles, California 90017

February 26, 2010

REPLY TO
ATTENTION OF
Office of the Chief
Regulatory Division

Joshua Zinn
AECOM
1420 Kettner Boulevard, Suite 500
San Diego, California 92101

SUBJECT: Approved Jurisdictional Determination Regarding Absence of Geographic Jurisdiction

Dear Mr. Zinn:

Reference is made to your request (File No. SPL-2009-00928-SME) dated August 26, 2009, for an approved Department of the Army jurisdictional determination (JD) for the Abengoa Mojave Solar Energy project site (35.0173, -117.3058) located near the community of Lockhart, San Bernardino County, California.

As you may know, the Corps' evaluation process for determining whether or not a Department of the Army permit is needed involves two tests. If both tests are met, then a permit is required. The first test determines whether or not the proposed project is located in a water of the United States (i.e., it is within the Corps' geographic jurisdiction). The second test determines whether or not the proposed project is a regulated activity under Section 10 of the River and Harbor Act or Section 404 of the Clean Water Act. As part of the evaluation process, pertaining to the first test only, we have made the jurisdictional determination below.

Based on available information, we have determined there are no waters of the United States on the project site, in the locations depicted on the enclosed drawing. The basis for our determination can be found in the enclosed JD forms.

The aquatic resources identified as tamarisk wetlands and a playa lakebed on the above drawing are intrastate isolated waters with no apparent interstate or foreign commerce connection. As such, these waters are not currently regulated by the Corps of Engineers. This disclaimer of jurisdiction is only for Section 404 of the Clean Water Act. Other Federal, State, and local laws may apply to your activities. In particular, you may need authorization from the California State Water Resources Control Board and/or the U.S. Fish and Wildlife Service.

This letter contains an approved jurisdictional determination for the Abengoa Mojave Solar Energy project site. If you object to this decision, you may request an administrative appeal under Corps regulations at 33 CFR Part 331. Enclosed you will find a Notification of Appeal Process (NAP) fact sheet (Appendix A) and Request for Appeal (RFA) form. If you request to appeal this decision you must submit a completed RFA form to the Corps South Pacific Division Office at the following address:

Tom Cavanaugh
Administrative Appeal Review Officer,
U.S. Army Corps of Engineers
South Pacific Division, CESPD-PDS-O, 2042B
1455 Market Street, San Francisco, California 94103-1399

In order for an RFA to be accepted by the Corps, the Corps must determine that it is complete, that it meets the criteria for appeal under 33 C.F.R. Part 331.5, and that it has been received by the Division Office within 60 days of the date on the NAP. Should you decide to submit an RFA form, it must be received at the above address by April 27, 2010. It is not necessary to submit an RFA form to the Division office if you do not object to the decision in this letter.

This verification is valid for five years from the date of this letter, unless new information warrants revision of the determination before the expiration date. If you wish to submit new information regarding the approved jurisdictional determination for this site, please submit this information to Stephen Estes at the letterhead address by April 27, 2010. The Corps will consider any new information so submitted and respond within 60 days by either revising the prior determination, if appropriate, or reissuing the prior determination. A revised or reissued jurisdictional determination can be appealed as described above.

This determination has been conducted to identify the extent of the Corps' Clean Water Act jurisdiction on the particular project site identified in your request. This determination may not be valid for the wetland conservation provisions of the Food Security Act of 1985. If you or your tenant are USDA program participants, or anticipate participation in USDA programs, you should request a certified wetland determination from the local office of the Natural Resources Conservation Service, prior to starting work.

If you have any questions, please contact Stephen Estes at 213-452-3660 or via e-mail at Stephen.M.Estes@usace.army.mil.

Please be advised that you can now comment on your experience with Regulatory Division by accessing the Corps web-based customer survey form at: http://per2.nwp.usace.army.mil/survey.html.

Sincerely,

Mark Durham

Mark Durham
Chief, South Coast Branch
Regulatory Division

Enclosures

NOTIFICATION OF ADMINISTRATIVE APPEAL OPTIONS AND PROCESS AND REQUEST FOR APPEAL

Applicant: None Consultant: Joshua Zinn, AECOM	File Number: SPL-2009-00928-SME	Date: 02/26/2010

Attached is:		See Section below
	INITIAL PROFFERED PERMIT (Standard Permit or Letter of permission)	A
	PROFFERED PERMIT (Standard Permit or Letter of permission)	B
	PERMIT DENIAL	C
X	APPROVED JURISDICTIONAL DETERMINATION	D
	PRELIMINARY JURISDICTIONAL DETERMINATION	E

SECTION I - The following identifies your rights and options regarding an administrative appeal of the above decision. Additional information may be found at http://usace.army.mil/inet/functions/cw/cecwo/reg or Corps regulations at 33 CFR Part 331.

A: INITIAL PROFFERED PERMIT: You may accept or object to the permit.

- ACCEPT: If you received a Standard Permit, you may sign the permit document and return it to the district engineer for final authorization. If you received a Letter of Permission (LOP), you may accept the LOP and your work is authorized. Your signature on the Standard Permit or acceptance of the LOP means that you accept the permit in its entirety, and waive all rights to appeal the permit, including its terms and conditions, and approved jurisdictional determinations associated with the permit.
- OBJECT: If you object to the permit (Standard or LOP) because of certain terms and conditions therein, you may request that the permit be modified accordingly. You must complete Section II of this form and return the form to the district engineer. Your objections must be received by the district engineer within 60 days of the date of this notice, or you will forfeit your right to appeal the permit in the future. Upon receipt of your letter, the district engineer will evaluate your objections and may: (a) modify the permit to address all of your concerns, (b) modify the permit to address some of your objections, or (c) not modify the permit having determined that the permit should be issued as previously written. After evaluating your objections, the district engineer will send you a proffered permit for your reconsideration, as indicated in Section B below.

B: PROFFERED PERMIT: You may accept or appeal the permit.

- ACCEPT: If you received a Standard Permit, you may sign the permit document and return it to the district engineer for final authorization. If you received a Letter of Permission (LOP), you may accept the LOP and your work is authorized. Your signature on the Standard Permit or acceptance of the LOP means that you accept the permit in its entirety, and waive all rights to appeal the permit, including its terms and conditions, and approved jurisdictional determinations associated with the permit.
- APPEAL: If you choose to decline the proffered permit (Standard or LOP) because of certain terms and conditions therein, you may appeal the declined permit under the Corps of Engineers Administrative Appeal Process by completing Section II of this form and sending the form to the division engineer. This form must be received by the division engineer within 60 days of the date of this notice.

C: PERMIT DENIAL: You may appeal the denial of a permit under the Corps of Engineers Administrative Appeal Process by completing Section II of this form and sending the form to the division engineer. This form must be received by the division engineer within 60 days of the date of this notice.

D: APPROVED JURISDICTIONAL DETERMINATION: You may accept or appeal the approved JD or provide new information.

- ACCEPT: You do not need to notify the Corps to accept an approved JD. Failure to notify the Corps within 60 days of the date of this notice means that you accept the approved JD in its entirety, and waive all rights to appeal the approved JD.
- APPEAL: If you disagree with the approved JD, you may appeal the approved JD under the Corps of Engineers Administrative Appeal Process by completing Section II of this form and sending the form to the division engineer. This form must be received by the division engineer within 60 days of the date of this notice.

E: PRELIMINARY JURISDICTIONAL DETERMINATION: You do not need to respond to the Corps regarding the preliminary JD. The Preliminary JD is not appealable. If you wish, you may request an approved JD (which may be appealed), by contacting the Corps district for further instruction. Also you may provide new information for further consideration by the Corps to reevaluate the JD.

SECTION II - REQUEST FOR APPEAL or OBJECTIONS TO AN INITIAL PROFFERED PERMIT
REASONS FOR APPEAL OR OBJECTIONS: (Describe your reasons for appealing the decision or your objections to an initial proffered permit in clear concise statements. You may attach additional information to this form to clarify where your reasons or objections are addressed in the administrative record.)
ADDITIONAL INFORMATION: The appeal is limited to a review of the administrative record, the Corps memorandum for the record of the appeal conference or meeting, and any supplemental information that the review officer has determined is needed to clarify the administrative record. Neither the appellant nor the Corps may add new information or analyses to the record. However, you may provide additional information to clarify the location of information that is already in the administrative record.

POINT OF CONTACT FOR QUESTIONS OR INFORMATION:	
If you have questions regarding this decision and/or the appeal process you may contact: DISTRICT ENGINEER Los Angeles District, Corps of Engineers ATTN: Chief, Regulatory Division P.O. Box 532711 Los Angeles, CA 90053-2325 Tel. (213) 452-3425	If you only have questions regarding the appeal process you may also contact: DIVISION ENGINEER South Pacific Division, Corps of Engineers ATTN: Tom Cavanaugh Administrative Appeal Review Officer, South Pacific Division, CESPD-PDS-O, 2042B 1455 Market Street, San Francisco, California 94103-1399 Tel. (415) 503-6574

RIGHT OF ENTRY: Your signature below grants the right of entry to Corps of Engineers personnel, and any government consultants, to conduct investigations of the project site during the course of the appeal process. You will be provided a 15 day notice of any site investigation, and will have the opportunity to participate in all site investigations.

	Date:	Telephone number:
_____ Signature of appellant or agent.		

Administrative Appeal Process for Approved Jurisdictional Determinations

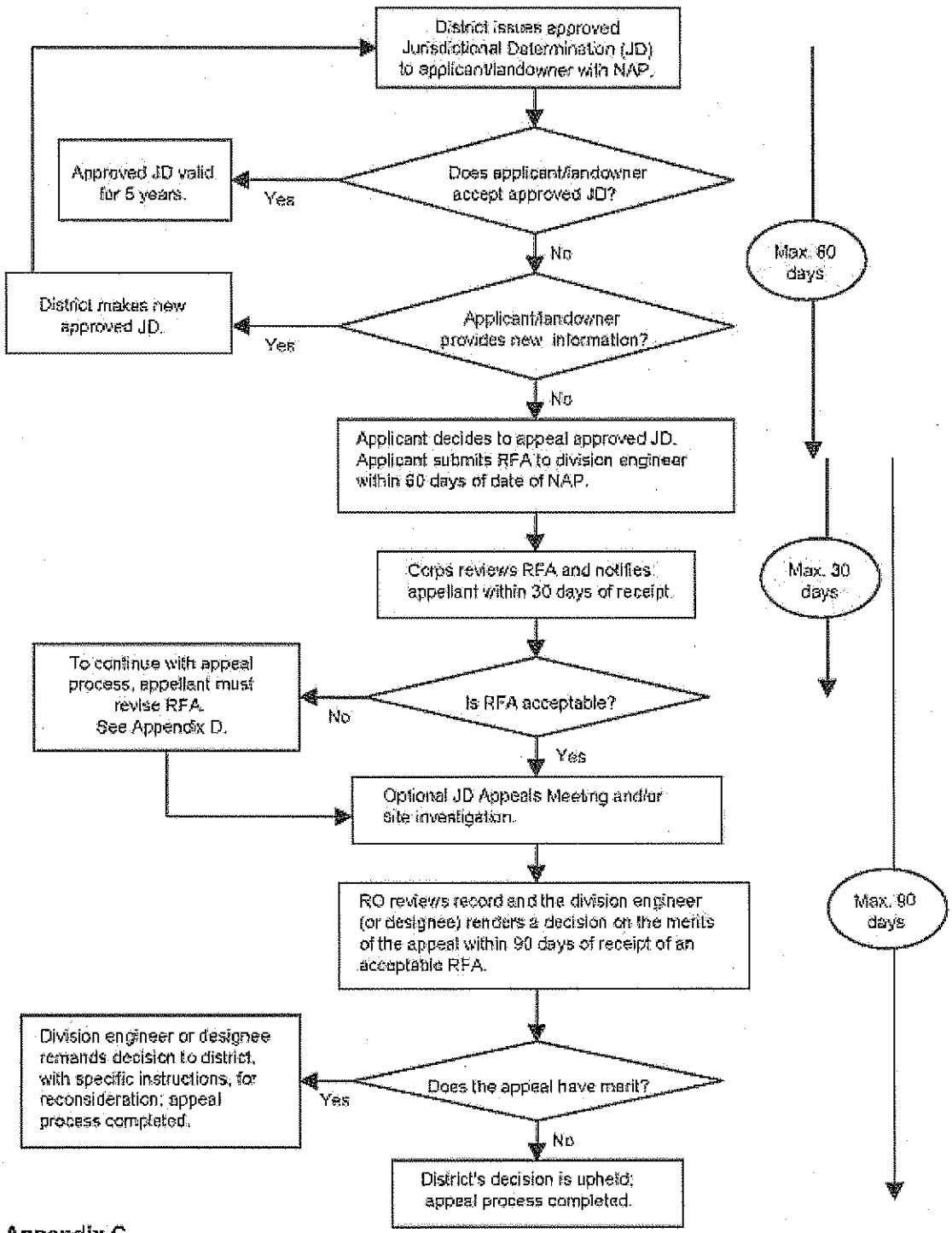

Appendix C

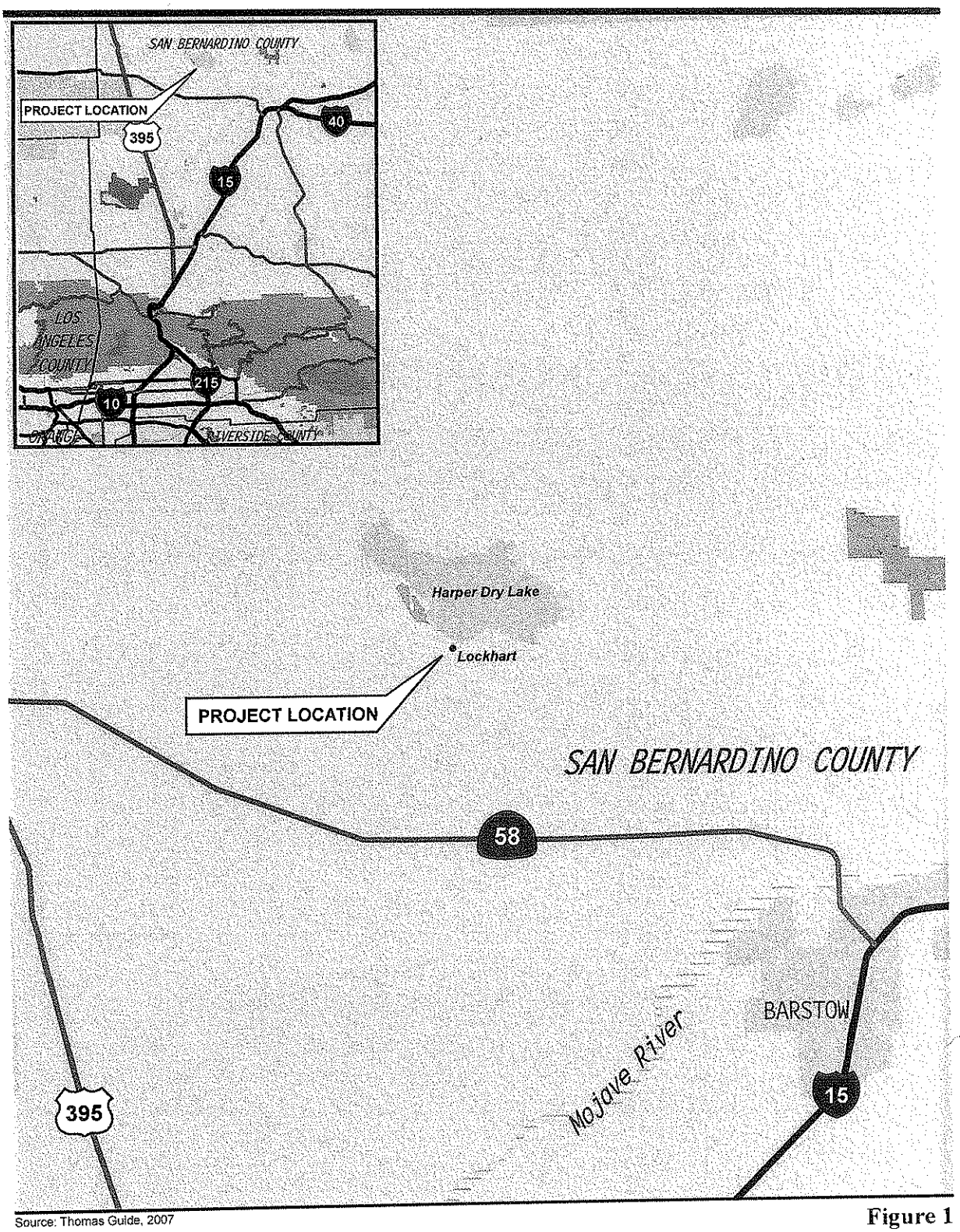

Source: Thomas Guide, 2007

4.5 2.25 0 4.5 Miles

Approximate Scale: 1 inch = 4.5 miles

Figure 1
Regional Map

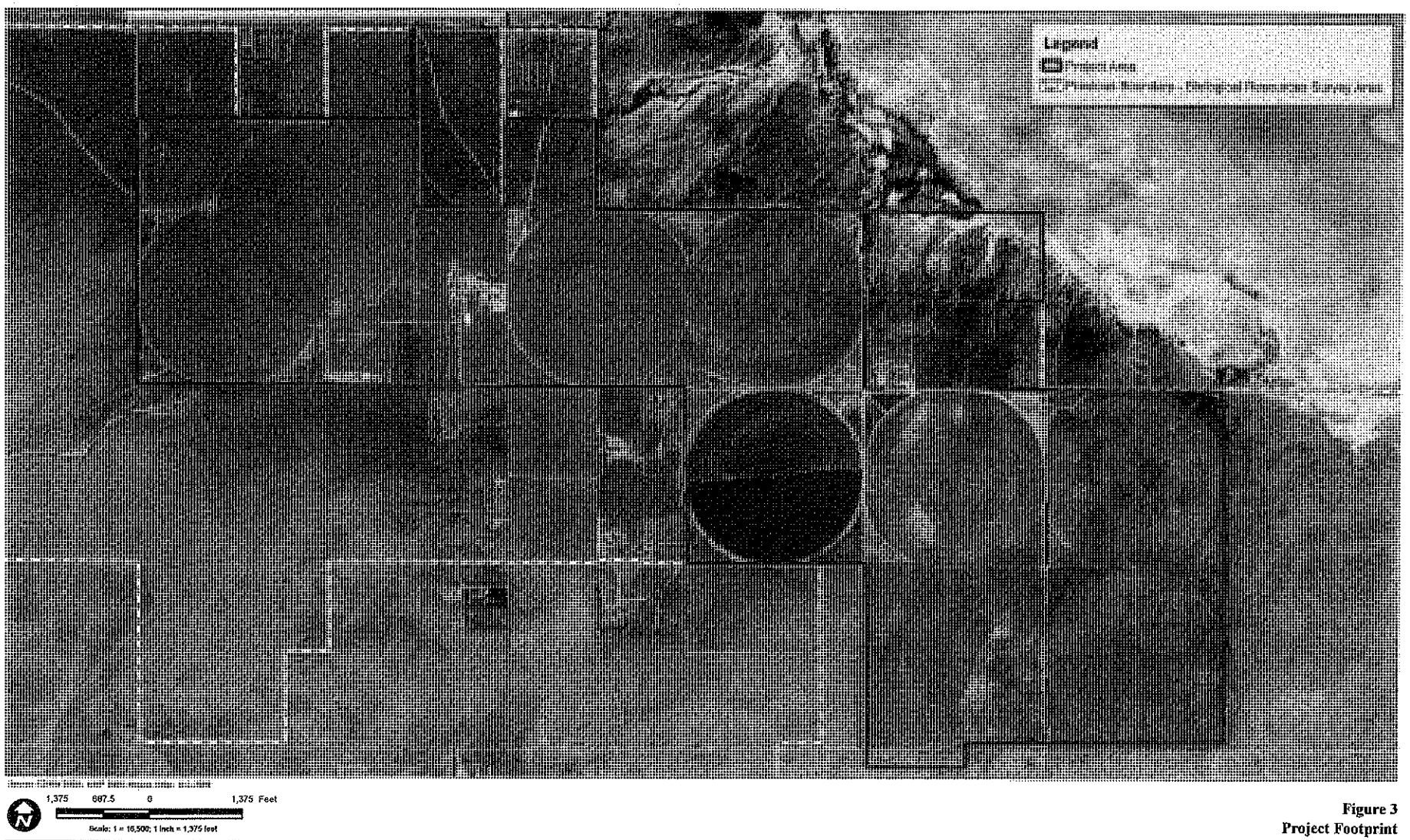

Figure 3
Project Footprint

Path: P:\2008\08080191 Harper Lake Abengoa AFC\6.0 GIS\6.2 Project Directory\6.2.3 Layout\BIO\WETLANDS\JDR_figures\fig 3_Project_footprint.mxd, 06/19/09, Angelica

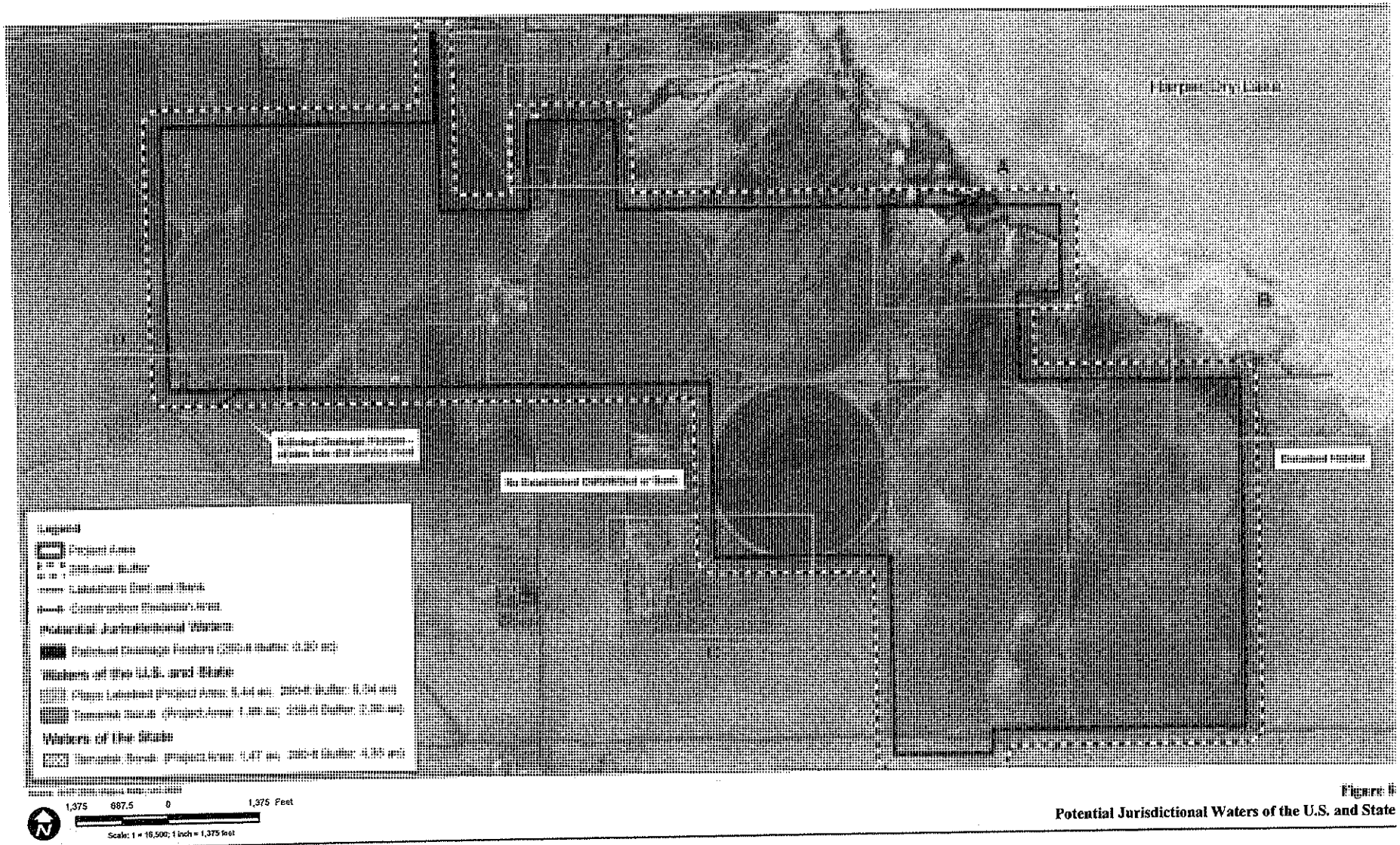

Figure 8
Potential Jurisdictional Waters of the U.S. and State

APPROVED JURISDICTIONAL DETERMINATION FORM
U.S. Army Corps of Engineers

This form should be completed by following the instructions provided in Section IV of the JD Form Instructional Guidebook.

SECTION I: BACKGROUND INFORMATION

A. REPORT COMPLETION DATE FOR APPROVED JURISDICTIONAL DETERMINATION (JD): February 3, 2010

B. DISTRICT OFFICE, FILE NAME, AND NUMBER: SPL-2009-00928-SME-JD1

C. PROJECT LOCATION AND BACKGROUND INFORMATION:

State: California County/parish/borough: San Bernardino City: Lockhart
Center coordinates of site (lat/long in degree decimal format): Lat. 35.01449° N, Long. -117.32124° W.
Universal Transverse Mercator:
Name of nearest waterbody: Harper Dry Lake
Name of nearest Traditional Navigable Water (TNW) into which the aquatic resource flows: None (isolated)
Name of watershed or Hydrologic Unit Code (HUC): Coyote-Cuddleback Lakes Watershed (HUC 18090207)

- ☒ Check if map/diagram of review area and/or potential jurisdictional areas is/are available upon request.
- ☒ Check if other sites (e.g., offsite mitigation sites, disposal sites, etc…) are associated with this action and are recorded on a different JD form.

D. REVIEW PERFORMED FOR SITE EVALUATION (CHECK ALL THAT APPLY):

- ☒ Office (Desk) Determination. Date: February 1, 2010
- ☒ Field Determination. Date(s): January 14, 2010

SECTION II: SUMMARY OF FINDINGS

A. RHA SECTION 10 DETERMINATION OF JURISDICTION.

There **Are no** "*navigable waters of the U.S.*" within Rivers and Harbors Act (RHA) jurisdiction (as defined by 33 CFR part 329) in the review area. [*Required*]

- ☐ Waters subject to the ebb and flow of the tide.
- ☐ Waters are presently used, or have been used in the past, or may be susceptible for use to transport interstate or foreign commerce. Explain: .

B. CWA SECTION 404 DETERMINATION OF JURISDICTION.

There **Are no** "*waters of the U.S.*" within Clean Water Act (CWA) jurisdiction (as defined by 33 CFR part 328) in the review area. [*Required*]

1. **Waters of the U.S.**
   a. **Indicate presence of waters of U.S. in review area (check all that apply):** [1]
   - ☐ TNWs, including territorial seas
   - ☐ Wetlands adjacent to TNWs
   - ☐ Relatively permanent waters[2] (RPWs) that flow directly or indirectly into TNWs
   - ☐ Non-RPWs that flow directly or indirectly into TNWs
   - ☐ Wetlands directly abutting RPWs that flow directly or indirectly into TNWs
   - ☐ Wetlands adjacent to but not directly abutting RPWs that flow directly or indirectly into TNWs
   - ☐ Wetlands adjacent to non-RPWs that flow directly or indirectly into TNWs
   - ☐ Impoundments of jurisdictional waters
   - ☐ Isolated (interstate or intrastate) waters, including isolated wetlands

   b. **Identify (estimate) size of waters of the U.S. in the review area:**
   Non-wetland waters: linear feet: width (ft) and/or acres.
   Wetlands: acres.

   c. **Limits (boundaries) of jurisdiction** based on: **Pick List**
   Elevation of established OHWM (if known): .

2. **Non-regulated waters/wetlands (check if applicable):**[3]
   - ☒ Potentially jurisdictional waters and/or wetlands were assessed within the review area and determined to be not jurisdictional. Explain: **Tamarisk Scrub Wetlands #16, #18-19, and #21-30 are groundwater-fed wetlands. These waters are situated within the southwest portion of the Coyote-Cuddleback Lakes Watershed. Surface flows within the project site travel**

[1] Boxes checked below shall be supported by completing the appropriate sections in Section III below.
[2] For purposes of this form, an RPW is defined as a tributary that is not a TNW and that typically flows year-round or has continuous flow at least "seasonally" (e.g., typically 3 months).
[3] Supporting documentation is presented in Section III.F.

in a general northeast direction to Harper Dry Lake, which is an intrastate dry lake (the project area extends into Harper Dry Lake; however, the lake itself is in a construction exclusion area). Precipitation ranges from 2.23 to 2.5 inches per year. Wetland waters exist on the project site despite the dry climate, as they are hydrologically supported by groundwater. Historically, these wetlands were much more extensive. Agricultural uses on the project site created a lower groundwater table over time, reducing the quantity and quality of the wetlands. Since Harper Dry Lake is the elevational low point for the basin, it serves as the terminus for Tamarisk Scrub Wetlands #16, #18-19, and #21-30. All surface flows entering Harper Dry Lake percolate into the groundwater table. Surface waters for the Harper Dry Lake system are isolated from the Mojave River (which is located approximately 10 miles to the southeast) by higher ground surrounding the dry lake on its eastern and southern boundaries. A dry wash flows northwest from the Mojave River toward Harper Dry Lake, but only flows during extreme events, is not a relatively permanent connection between Harper Dry Lake and the Mojave River, and only flows from the Mojave River to Harper Dry Lake, NOT from Harper Dry Lake to the Mojave River. The predominant soil types in the project area are Norob-Halloran Complex and Cajon Loamy Sand (Cajon Sand), which are characterized by moderate and somewhat excessive rates of permeability, respectively. Botb surface and groundwater flows from the surrounding mountain ranges are directed to Harper Dry Lake. The project site wetland waters have physical surface sheet flow connectivity and hydrologic connectivity with Harper Dry Lake. Harper Dry Lake, as the terminus for these 13 wetland waters, is NOT a TNW. Moreover, Harper Dry Lake is NOT an (a)(3) water as defined by 33 CFR 328.3. Harper Dry Lake does NOT meet criteria (a)(3)(i-iii), as it: i) DOES NOT have use for surface water recreation or other purposes by foreign or interstate travelers, ii) DOES NOT have harvesting activities of fish or shellfish that may be sold in interstate or foreign commerce, and iii) DOES NOT have surface water industrial usage by industries in interstate commerce. Lastly, Tamarisk Scrub Wetlands #16, #18-19, and #21-30 themselves are NOT (a)(3) waters as defined by 33 CFR 328.3. Therefore, since Harper Dry Lake is an isolated water without a surface water connection to commerce, these 13 wetland waters are also isolated, and additionally, have no nexus to commerce. Based on the above information, the Corps concludes that Tamarisk Scrub Wetlands #16, #18-19, and #21-30 (isolated wetlands) are NONJURISDICTIONAL waters, since the waters are NOT tributary to either a TNW or an (a)(3) water and are NOT (a)(3) waters themselves. The Corps makes such a conclusion since the waters are tributary to an isolated lake that does not qualify as a TNW or as an (a)(3) water, and since the waters also do not qualify as (a)(3) waters..

SECTION III: CWA ANALYSIS

A. TNWs AND WETLANDS ADJACENT TO TNWs

The agencies will assert jurisdiction over TNWs and wetlands adjacent to TNWs. If the aquatic resource is a TNW, complete Section III.A.1 and Section III.D.1. only; if the aquatic resource is a wetland adjacent to a TNW, complete Sections III.A.1 and 2 and Section III.D.1.; otherwise, see Section III.B below.

1. TNW
Identify TNW: .

Summarize rationale supporting determination: .

2. Wetland adjacent to TNW
Summarize rationale supporting conclusion that wetland is "adjacent": .

B. CHARACTERISTICS OF TRIBUTARY (THAT IS NOT A TNW) AND ITS ADJACENT WETLANDS (IF ANY):

This section summarizes information regarding characteristics of the tributary and its adjacent wetlands, if any, and it helps determine whether or not the standards for jurisdiction established under *Rapanos* have been met.

The agencies will assert jurisdiction over non-navigable tributaries of TNWs where the tributaries are "relatively permanent waters" (RPWs), i.e. tributaries that typically flow year-round or have continuous flow at least seasonally (e.g., typically 3 months). A wetland that directly abuts an RPW is also jurisdictional. If the aquatic resource is not a TNW, but has year-round (perennial) flow, skip to Section III.D.2. If the aquatic resource is a wetland directly abutting a tributary with perennial flow, skip to Section III.D.4.

A wetland that is adjacent to but that does not directly abut an RPW requires a significant nexus evaluation. Corps districts and EPA regions will include in the record any available information that documents the existence of a significant nexus between a relatively permanent tributary that is not perennial (and its adjacent wetlands if any) and a traditional navigable water, even though a significant nexus finding is not required as a matter of law.

If the waterbody[4] is not an RPW, or a wetland directly abutting an RPW, a JD will require additional data to determine if the waterbody has a significant nexus with a TNW. If the tributary has adjacent wetlands, the significant nexus evaluation must consider the tributary in combination with all of its adjacent wetlands. This significant nexus evaluation that combines, for analytical purposes, the tributary and all of its adjacent wetlands is used whether the review area identified in the JD request is the tributary, or its adjacent wetlands, or both. If the JD covers a tributary with adjacent wetlands, complete Section III.B.1 for the tributary, Section III.B.2 for any onsite wetlands, and Section III.B.3 for all wetlands adjacent to that tributary, both onsite and offsite. The determination whether a significant nexus exists is determined in Section III.C below.

1. Characteristics of non-TNWs that flow directly or indirectly into TNW

(i) General Area Conditions:
Watershed size: **Pick List**
Drainage area: **Pick List**
Average annual rainfall: inches
Average annual snowfall: inches

(ii) Physical Characteristics:
(a) Relationship with TNW:
☐ Tributary flows directly into TNW.
☐ Tributary flows through **Pick List** tributaries before entering TNW.

Project waters are **Pick List** river miles from TNW.
Project waters are **Pick List** river miles from RPW.
Project waters are **Pick List** aerial (straight) miles from TNW.
Project waters are **Pick List** aerial (straight) miles from RPW.
Project waters cross or serve as state boundaries. Explain: .

Identify flow route to TNW[5]: .
Tributary stream order, if known: .

---

[4] Note that the Instructional Guidebook contains additional information regarding swales, ditches, washes, and erosional features generally and in the arid West.
[5] Flow route can be described by identifying, e.g., tributary a, which flows through the review area, to flow into tributary b, which then flows into TNW.

(b) General Tributary Characteristics (check all that apply):

Tributary is:
- ☐ Natural
- ☐ Artificial (man-made). Explain: .
- ☐ Manipulated (man-altered). Explain: .

Tributary properties with respect to top of bank (estimate):
Average width: feet
Average depth: feet
Average side slopes: **Pick List.**

Primary tributary substrate composition (check all that apply):
- ☐ Silts
- ☐ Sands
- ☐ Concrete
- ☐ Cobbles
- ☐ Gravel
- ☐ Muck
- ☐ Bedrock
- ☐ Vegetation. Type/% cover:
- ☐ Other. Explain: .

Tributary condition/stability [e.g., highly eroding, sloughing banks]. Explain: .
Presence of run/riffle/pool complexes. Explain: .
Tributary geometry: **Pick List**
Tributary gradient (approximate average slope): %

(c) Flow:
Tributary provides for: **Pick List**
Estimate average number of flow events in review area/year: **Pick List**
Describe flow regime: .
Other information on duration and volume: .

Surface flow is: **Pick List.** Characteristics: .

Subsurface flow: **Pick List.** Explain findings: .
- ☐ Dye (or other) test performed: .

Tributary has (check all that apply):
- ☐ Bed and banks
- ☐ OHWM[6] (check all indicators that apply):
  - ☐ clear, natural line impressed on the bank
  - ☐ changes in the character of soil
  - ☐ shelving
  - ☐ vegetation matted down, bent, or absent
  - ☐ leaf litter disturbed or washed away
  - ☐ sediment deposition
  - ☐ water staining
  - ☐ other (list):
  - ☐ the presence of litter and debris
  - ☐ destruction of terrestrial vegetation
  - ☐ the presence of wrack line
  - ☐ sediment sorting
  - ☐ scour
  - ☐ multiple observed or predicted flow events
  - ☐ abrupt change in plant community
- ☐ Discontinuous OHWM.[7] Explain: .

If factors other than the OHWM were used to determine lateral extent of CWA jurisdiction (check all that apply):
- ☐ High Tide Line indicated by:
  - ☐ oil or scum line along shore objects
  - ☐ fine shell or debris deposits (foreshore)
  - ☐ physical markings/characteristics
  - ☐ tidal gauges
  - ☐ other (list):
- ☐ Mean High Water Mark indicated by:
  - ☐ survey to available datum;
  - ☐ physical markings;
  - ☐ vegetation lines/changes in vegetation types.

(iii) Chemical Characteristics:
Characterize tributary (e.g., water color is clear, discolored, oily film; water quality; general watershed characteristics, etc.).
Explain: .
Identify specific pollutants, if known: .

[6]A natural or man-made discontinuity in the OHWM does not necessarily sever jurisdiction (e.g., where the stream temporarily flows underground, or where the OHWM has been removed by development or agricultural practices). Where there is a break in the OHWM that is unrelated to the waterbody's flow regime (e.g., flow over a rock outcrop or through a culvert), the agencies will look for indicators of flow above and below the break.
[7]Ibid.

(iv) Biological Characteristics. Channel supports (check all that apply):

- ☐ Riparian corridor. Characteristics (type, average width): .
- ☐ Wetland fringe. Characteristics: .
- ☐ Habitat for:
  - ☐ Federally Listed species. Explain findings: .
  - ☐ Fish/spawn areas. Explain findings: .
  - ☐ Other environmentally-sensitive species. Explain findings: .
  - ☐ Aquatic/wildlife diversity. Explain findings: .

2. Characteristics of wetlands adjacent to non-TNW that flow directly or indirectly into TNW

(i) Physical Characteristics:

(a) General Wetland Characteristics:

Properties:

Wetland size: acres

Wetland type. Explain: .

Wetland quality. Explain: .

Project wetlands cross or serve as state boundaries. Explain: .

(b) General Flow Relationship with Non-TNW:

Flow is: **Pick List**. Explain: .

Surface flow is: **Pick List**

Characteristics: .

Subsurface flow: **Pick List**. Explain findings: .

- ☐ Dye (or other) test performed: .

(c) Wetland Adjacency Determination with Non-TNW:

- ☐ Directly abutting
- ☐ Not directly abutting
  - ☐ Discrete wetland hydrologic connection. Explain: .
  - ☐ Ecological connection. Explain: .
  - ☐ Separated by berm/barrier. Explain: .

(d) Proximity (Relationship) to TNW

Project wetlands are **Pick List** river miles from TNW.

Project waters are **Pick List** aerial (straight) miles from TNW.

Flow is from: **Pick List.**

Estimate approximate location of wetland as within the **Pick List** floodplain.

(ii) Chemical Characteristics:

Characterize wetland system (e.g., water color is clear, brown, oil film on surface; water quality; general watershed characteristics; etc.). Explain: .

Identify specific pollutants, if known: .

(iii) Biological Characteristics. Wetland supports (check all that apply):

- ☐ Riparian buffer. Characteristics (type, average width): .
- ☐ Vegetation type/percent cover. Explain: .
- ☐ Habitat for:
  - ☐ Federally Listed species. Explain findings: .
  - ☐ Fish/spawn areas. Explain findings: .
  - ☐ Other environmentally-sensitive species. Explain findings: .
  - ☐ Aquatic/wildlife diversity. Explain findings: .

3. Characteristics of all wetlands adjacent to the tributary (if any)

All wetland(s) being considered in the cumulative analysis: **Pick List**

Approximately ( ) acres in total are being considered in the cumulative analysis.

For each wetland, specify the following:

Directly abuts? (Y/N)	Size (in acres)	Directly abuts? (Y/N)	Size (in acres)

Summarize overall biological, chemical and physical functions being performed: .

C. SIGNIFICANT NEXUS DETERMINATION

A significant nexus analysis will assess the flow characteristics and functions of the tributary itself and the functions performed by any wetlands adjacent to the tributary to determine if they significantly affect the chemical, physical, and biological integrity of a TNW. For each of the following situations, a significant nexus exists if the tributary, in combination with all of its adjacent wetlands, has more than a speculative or insubstantial effect on the chemical, physical and/or biological integrity of a TNW. Considerations when evaluating significant nexus include, but are not limited to the volume, duration, and frequency of the flow of water in the tributary and its proximity to a TNW, and the functions performed by the tributary and all its adjacent wetlands. It is not appropriate to determine significant nexus based solely on any specific threshold of distance (e.g. between a tributary and its adjacent wetland or between a tributary and the TNW). Similarly, the fact an adjacent wetland lies within or outside of a floodplain is not solely determinative of significant nexus.

Draw connections between the features documented and the effects on the TNW, as identified in the *Rapanos* Guidance and discussed in the Instructional Guidebook. Factors to consider include, for example:

- Does the tributary, in combination with its adjacent wetlands (if any), have the capacity to carry pollutants or flood waters to TNWs, or to reduce the amount of pollutants or flood waters reaching a TNW?
- Does the tributary, in combination with its adjacent wetlands (if any), provide habitat and lifecycle support functions for fish and other species, such as feeding, nesting, spawning, or rearing young for species that are present in the TNW?
- Does the tributary, in combination with its adjacent wetlands (if any), have the capacity to transfer nutrients and organic carbon that support downstream foodwebs?
- Does the tributary, in combination with its adjacent wetlands (if any), have other relationships to the physical, chemical, or biological integrity of the TNW?

Note: the above list of considerations is not inclusive and other functions observed or known to occur should be documented below:

1. **Significant nexus findings for non-RPW that has no adjacent wetlands and flows directly or indirectly into TNWs.** Explain findings of presence or absence of significant nexus below, based on the tributary itself, then go to Section III.D: .

2. **Significant nexus findings for non-RPW and its adjacent wetlands, where the non-RPW flows directly or indirectly into TNWs.** Explain findings of presence or absence of significant nexus below, based on the tributary in combination with all of its adjacent wetlands, then go to Section III.D: .

3. **Significant nexus findings for wetlands adjacent to an RPW but that do not directly abut the RPW.** Explain findings of presence or absence of significant nexus below, based on the tributary in combination with all of its adjacent wetlands, then go to Section III.D: .

D. DETERMINATIONS OF JURISDICTIONAL FINDINGS. THE SUBJECT WATERS/WETLANDS ARE (CHECK ALL THAT APPLY):

1. **TNWs and Adjacent Wetlands.** Check all that apply and provide size estimates in review area:
   - ☐ TNWs: linear feet width (ft), Or, acres.
   - ☐ Wetlands adjacent to TNWs: acres.

2. **RPWs that flow directly or indirectly into TNWs.**
   - ☐ Tributaries of TNWs where tributaries typically flow year-round are jurisdictional. Provide data and rationale indicating that tributary is perennial: .
   - ☐ Tributaries of TNW where tributaries have continuous flow "seasonally" (e.g., typically three months each year) are jurisdictional. Data supporting this conclusion is provided at Section III.B. Provide rationale indicating that tributary flows seasonally: .

Provide estimates for jurisdictional waters in the review area (check all that apply):
☐ Tributary waters: linear feet width (ft).
☐ Other non-wetland waters: acres.
Identify type(s) of waters: .

3. **Non-RPWs[8] that flow directly or indirectly into TNWs.**
☐ Waterbody that is not a TNW or an RPW, but flows directly or indirectly into a TNW, and it has a significant nexus with a TNW is jurisdictional. Data supporting this conclusion is provided at Section III.C.

Provide estimates for jurisdictional waters within the review area (check all that apply):
☐ Tributary waters: linear feet width (ft).
☐ Other non-wetland waters: acres.
Identify type(s) of waters: .

4. **Wetlands directly abutting an RPW that flow directly or indirectly into TNWs.**
☐ Wetlands directly abut RPW and thus are jurisdictional as adjacent wetlands.
☐ Wetlands directly abutting an RPW where tributaries typically flow year-round. Provide data and rationale indicating that tributary is perennial in Section III.D.2, above. Provide rationale indicating that wetland is directly abutting an RPW: .

☐ Wetlands directly abutting an RPW where tributaries typically flow "seasonally." Provide data indicating that tributary is seasonal in Section III.B and rationale in Section III.D.2, above. Provide rationale indicating that wetland is directly abutting an RPW: .

Provide acreage estimates for jurisdictional wetlands in the review area: acres.

5. **Wetlands adjacent to but not directly abutting an RPW that flow directly or indirectly into TNWs.**
☐ Wetlands that do not directly abut an RPW, but when considered in combination with the tributary to which they are adjacent and with similarly situated adjacent wetlands, have a significant nexus with a TNW are jurisidictional. Data supporting this conclusion is provided at Section III.C.

Provide acreage estimates for jurisdictional wetlands in the review area: acres.

6. **Wetlands adjacent to non-RPWs that flow directly or indirectly into TNWs.**
☐ Wetlands adjacent to such waters, and have when considered in combination with the tributary to which they are adjacent and with similarly situated adjacent wetlands, have a significant nexus with a TNW are jurisdictional. Data supporting this conclusion is provided at Section III.C.

Provide estimates for jurisdictional wetlands in the review area: acres.

7. **Impoundments of jurisdictional waters.[9]**
As a general rule, the impoundment of a jurisdictional tributary remains jurisdictional.
☐ Demonstrate that impoundment was created from "waters of the U.S.," or
☐ Demonstrate that water meets the criteria for one of the categories presented above (1-6), or
☐ Demonstrate that water is isolated with a nexus to commerce (see E below).

E. ISOLATED [INTERSTATE OR INTRA-STATE] WATERS, INCLUDING ISOLATED WETLANDS, THE USE, DEGRADATION OR DESTRUCTION OF WHICH COULD AFFECT INTERSTATE COMMERCE, INCLUDING ANY SUCH WATERS (CHECK ALL THAT APPLY):[10]
☐ which are or could be used by interstate or foreign travelers for recreational or other purposes.
☐ from which fish or shellfish are or could be taken and sold in interstate or foreign commerce.
☐ which are or could be used for industrial purposes by industries in interstate commerce.
☐ Interstate isolated waters. Explain: .
☐ Other factors. Explain: .

Identify water body and summarize rationale supporting determination: .

---

[8] See Footnote # 3.
[9] To complete the analysis refer to the key in Section III.D.6 of the Instructional Guidebook.
[10] **Prior to asserting or declining CWA jurisdiction based solely on this category, Corps Districts will elevate the action to Corps and EPA HQ for review consistent with the process described in the Corps/EPA *Memorandum Regarding CWA Act Jurisdiction Following Rapanos.***

Provide estimates for jurisdictional waters in the review area (check all that apply):
☐ Tributary waters: linear feet width (ft).
☐ Other non-wetland waters: acres.
Identify type(s) of waters: .
☐ Wetlands: acres.

F. NON-JURISDICTIONAL WATERS, INCLUDING WETLANDS (CHECK ALL THAT APPLY):
☐ If potential wetlands were assessed within the review area, these areas did not meet the criteria in the 1987 Corps of Engineers Wetland Delineation Manual and/or appropriate Regional Supplements.
☒ Review area included isolated waters with no substantial nexus to interstate (or foreign) commerce.
☒ Prior to the Jan 2001 Supreme Court decision in "*SWANCC*," the review area would have been regulated based solely on the "Migratory Bird Rule" (MBR).
☐ Waters do not meet the "Significant Nexus" standard, where such a finding is required for jurisdiction. Explain: .
☐ Other: (explain, if not covered above): .

Provide acreage estimates for non-jurisdictional waters in the review area, where the sole potential basis of jurisdiction is the MBR factors (i.e., presence of migratory birds, presence of endangered species, use of water for irrigated agriculture), using best professional judgment (check all that apply):
☐ Non-wetland waters (i.e., rivers, streams): linear feet width (ft).
☐ Lakes/ponds: acres.
☐ Other non-wetland waters: acres. List type of aquatic resource: .
☒ Wetlands: 1.633 acres.

Provide acreage estimates for non-jurisdictional waters in the review area that do not meet the "Significant Nexus" standard, where such a finding is required for jurisdiction (check all that apply):
☐ Non-wetland waters (i.e., rivers, streams): linear feet, width (ft).
☐ Lakes/ponds: acres.
☐ Other non-wetland waters: acres. List type of aquatic resource: .
☐ Wetlands: acres.

SECTION IV: DATA SOURCES.

A. SUPPORTING DATA. Data reviewed for JD (check all that apply - checked items shall be included in case file and, where checked and requested, appropriately reference sources below):
☒ Maps, plans, plots or plat submitted by or on behalf of the applicant/consultant: Jurisdictional Delineation Report: Potential Jurisdictional Waters of the U.S. and State.
☒ Data sheets prepared/submitted by or on behalf of the applicant/consultant.
☐ Office concurs with data sheets/delineation report.
☒ Office does not concur with data sheets/delineation report.
☐ Data sheets prepared by the Corps: .
☐ Corps navigable waters' study: .
☐ U.S. Geological Survey Hydrologic Atlas: .
☐ USGS NHD data.
☐ USGS 8 and 12 digit HUC maps.
☐ U.S. Geological Survey map(s). Cite scale & quad name: .
☒ USDA Natural Resources Conservation Service Soil Survey. Citation: USDA. 1986. Soil Conservation Service Soil Survey of San Bernardino County California-Mojave River Area.
☐ National wetlands inventory map(s). Cite name: .
☐ State/Local wetland inventory map(s): .
☐ FEMA/FIRM maps: .
☐ 100-year Floodplain Elevation is: (National Geodectic Vertical Datum of 1929)
☒ Photographs: ☒ Aerial (Name & Date): Juris. Delineation Report: Potential Jurisdictional Waters of the U.S. and State (2005).
or ☐ Other (Name & Date): .
☐ Previous determination(s). File no. and date of response letter: .
☐ Applicable/supporting case law: .
☐ Applicable/supporting scientific literature: .
☒ Other information (please specify): Field visit on January 14, 2010 supported this JD.

B. ADDITIONAL COMMENTS TO SUPPORT JD: .

APPROVED JURISDICTIONAL DETERMINATION FORM
U.S. Army Corps of Engineers

This form should be completed by following the instructions provided in Section IV of the JD Form Instructional Guidebook.

SECTION I: BACKGROUND INFORMATION

A. REPORT COMPLETION DATE FOR APPROVED JURISDICTIONAL DETERMINATION (JD): February 3, 2010

B. DISTRICT OFFICE, FILE NAME, AND NUMBER: SPL-2009-00928-SME-JD2

C. PROJECT LOCATION AND BACKGROUND INFORMATION:

State: California County/parish/borough: San Bernardino City: Lockhart
Center coordinates of site (lat/long in degree decimal format): Lat. 35.01449° N, Long. -117.32124° W.
Universal Transverse Mercator:
Name of nearest waterbody: Harper Dry Lake
Name of nearest Traditional Navigable Water (TNW) into which the aquatic resource flows: None (isolated)
Name of watershed or Hydrologic Unit Code (HUC): Coyote-Cuddleback Lakes Watershed (HUC 18090207)

- ☒ Check if map/diagram of review area and/or potential jurisdictional areas is/are available upon request.
- ☒ Check if other sites (e.g., offsite mitigation sites, disposal sites, etc…) are associated with this action and are recorded on a different JD form.

D. REVIEW PERFORMED FOR SITE EVALUATION (CHECK ALL THAT APPLY):

- ☒ Office (Desk) Determination. Date: February 1, 2010
- ☒ Field Determination. Date(s): January 14, 2010

SECTION II: SUMMARY OF FINDINGS

A. RHA SECTION 10 DETERMINATION OF JURISDICTION.

There **Are no** "*navigable waters of the U.S.*" within Rivers and Harbors Act (RHA) jurisdiction (as defined by 33 CFR part 329) in the review area. [*Required*]

- ☐ Waters subject to the ebb and flow of the tide.
- ☐ Waters are presently used, or have been used in the past, or may be susceptible for use to transport interstate or foreign commerce. Explain: .

B. CWA SECTION 404 DETERMINATION OF JURISDICTION.

There **Are no** "*waters of the U.S.*" within Clean Water Act (CWA) jurisdiction (as defined by 33 CFR part 328) in the review area. [*Required*]

1. **Waters of the U.S.**
   a. **Indicate presence of waters of U.S. in review area (check all that apply):** [1]
   - ☐ TNWs, including territorial seas
   - ☐ Wetlands adjacent to TNWs
   - ☐ Relatively permanent waters[2] (RPWs) that flow directly or indirectly into TNWs
   - ☐ Non-RPWs that flow directly or indirectly into TNWs
   - ☐ Wetlands directly abutting RPWs that flow directly or indirectly into TNWs
   - ☐ Wetlands adjacent to but not directly abutting RPWs that flow directly or indirectly into TNWs
   - ☐ Wetlands adjacent to non-RPWs that flow directly or indirectly into TNWs
   - ☐ Impoundments of jurisdictional waters
   - ☐ Isolated (interstate or intrastate) waters, including isolated wetlands

   b. **Identify (estimate) size of waters of the U.S. in the review area:**
   Non-wetland waters: linear feet: width (ft) and/or acres.
   Wetlands: acres.

   c. **Limits (boundaries) of jurisdiction** based on: **Pick List**
   Elevation of established OHWM (if known): .

2. **Non-regulated waters/wetlands (check if applicable):**[3]
   - ☒ Potentially jurisdictional waters and/or wetlands were assessed within the review area and determined to be not jurisdictional. Explain: **Playa Lakebed #17 is a portion of Harper Dry Lake and is within the proposed project boundaries. This water is situated within the sonthwest portion of the Coyote-Cuddleback Lakes Watershed. Surface flows within the**

---

[1] Boxes checked below shall be supported by completing the appropriate sections in Section III below.
[2] For purposes of this form, an RPW is defined as a tributary that is not a TNW and that typically flows year-round or has continuous flow at least "seasonally" (e.g., typically 3 months).
[3] Supporting documentation is presented in Section III.F.

project site travel in a general northeast direction to Harper Dry Lake, which is an intrastate dry lake (the project area extends into Harper Dry Lake; however, Playa Lakebed #17 is in a construction exclusion area). Precipitation ranges from 2.23 to 2.5 inches per year. Harper Dry Lake is the elevational low point for the basin. All surface flows entering Harper Dry Lake percolate into the groundwater table. Surface waters for the Harper Dry Lake system are isolated from the Mojave River (which is located approximately 10 miles to the southeast) by higher ground surrounding the dry lake on its eastern and southern boundaries. A dry wash flows northwest from the Mojave River toward Harper Dry Lake, but only flows during extreme events, is not a relatively permanent connection between Harper Dry Lake and the Mojave River, and only flows from the Mojave River to Harper Dry Lake, NOT from Harper Dry Lake to the Mojave River. The predominant soil types in the project area are Norob-Halloran Complex and Cajon Loamy Sand (Cajon Sand), which are characterized by moderate and somewhat excessive rates of permeability, respectively. Both surface and groundwater flows from the surrounding mountain ranges are directed to Harper Dry Lake. Harper Dry Lake is NOT a TNW. Moreover, Harper Dry Lake is NOT an (a)(3) water as defined by 33 CFR 328.3. Harper Dry Lake does NOT meet criteria (a)(3)(i-iii), as it: i) DOES NOT have use for surface water recreation or other purposes by foreign or interstate travelers, ii) DOES NOT have harvesting activities of fish or shellfish that may be sold in interstate or foreign commerce, and iii) DOES NOT have surface water industrial usage by industries in interstate commerce. Therefore, Harper Dry Lake is an isolated water without a surface water connection to commerce. Based on the above information, the Corps concludes that Playa Lakebed #17 is a NONJURISDICTIONAL water, since the water is NOT tributary to either a TNW or an (a)(3) water. The Corps makes such a conclusion since the water is an isolated lake that does not qualify as a TNW or as an (a)(3) water.

SECTION III: CWA ANALYSIS

A. TNWs AND WETLANDS ADJACENT TO TNWs

The agencies will assert jurisdiction over TNWs and wetlands adjacent to TNWs. If the aquatic resource is a TNW, complete Section III.A.1 and Section III.D.1. only; if the aquatic resource is a wetland adjacent to a TNW, complete Sections III.A.1 and 2 and Section III.D.1.; otherwise, see Section III.B below.

1. TNW
Identify TNW: .

Summarize rationale supporting determination: .

2. Wetland adjacent to TNW
Summarize rationale supporting conclusion that wetland is "adjacent": .

B. CHARACTERISTICS OF TRIBUTARY (THAT IS NOT A TNW) AND ITS ADJACENT WETLANDS (IF ANY):

This section summarizes information regarding characteristics of the tributary and its adjacent wetlands, if any, and it helps determine whether or uot the standards for jurisdiction established under *Rapanos* have been met.

The agencies will assert jurisdiction over non-navigable tributaries of TNWs where the tributaries are "relatively permanent waters" (RPWs), i.e. tributaries that typically flow year-round or have continuous flow at least seasonally (e.g., typically 3 months). A wetland that directly abuts an RPW is also jurisdictional. If the aquatic resource is not a TNW, but has year-round (perennial) flow, skip to Section III.D.2. If the aquatic resource is a wetland directly abutting a tributary with perennial flow, skip to Section III.D.4.

A wetland that is adjacent to but that does not directly abut an RPW requires a significant nexus evaluation. Corps districts and EPA regions will include in the record any available information that documents the existence of a significant nexus between a relatively permanent tributary that is not perennial (and its adjacent wetlands if any) and a traditional navigable water, even though a significant nexus finding is not required as a matter of law.

If the waterbody[4] is not an RPW, or a wetland directly abutting an RPW, a JD will require additional data to determine if the waterbody has a significant nexus with a TNW. If the tributary has adjacent wetlands, the significant nexus evaluation must consider the tributary in combination with all of its adjacent wetlands. This significant nexus evaluation that combines, for analytical purposes, the tributary and all of its adjacent wetlands is used whether the review area identified in the JD request is the tributary, or its adjacent wetlands, or both. If the JD covers a tributary with adjacent wetlands, complete Section III.B.1 for the tributary, Section III.B.2 for any onsite wetlands, and Section III.B.3 for all wetlands adjacent to that tributary, both onsite and offsite. The determination whether a significant nexus exists is determined in Section III.C below.

1. Characteristics of non-TNWs that flow directly or indirectly into TNW

(i) General Area Conditions:
Watershed size: **Pick List**
Drainage area: **Pick List**
Average annual rainfall: inches
Average annual snowfall: inches

(ii) Physical Characteristics:
(a) Relationship with TNW:
☐ Tributary flows directly into TNW.
☐ Tributary flows through **Pick List** tributaries before entering TNW.

Project waters are **Pick List** river miles from TNW.
Project waters are **Pick List** river miles from RPW.
Project waters are **Pick List** aerial (straight) miles from TNW.
Project waters are **Pick List** aerial (straight) miles from RPW.
Project waters cross or serve as state boundaries. Explain: .

Identify flow route to TNW[5]: .
Tributary stream order, if known: .

---

[4] Note that the Instructional Guidebook contains additional information regarding swales, ditches, washes, and erosional features generally and in the arid West.

[5] Flow route can be described by identifying, e.g., tributary a, which flows through the review area, to flow into tributary b, which then flows into TNW.

(b) General Tributary Characteristics (check all that apply):

Tributary is:
- ☐ Natural
- ☐ Artificial (man-made). Explain: .
- ☐ Manipulated (man-altered). Explain: .

Tributary properties with respect to top of bank (estimate):
Average width: feet
Average depth: feet
Average side slopes: **Pick List.**

Primary tributary substrate composition (check all that apply):
- ☐ Silts
- ☐ Sands
- ☐ Concrete
- ☐ Cobbles
- ☐ Gravel
- ☐ Muck
- ☐ Bedrock
- ☐ Vegetation. Type/% cover:
- ☐ Other. Explain: .

Tributary condition/stability [e.g., highly eroding, sloughing banks]. Explain: .
Presence of run/riffle/pool complexes. Explain: .
Tributary geometry: **Pick List**
Tributary gradient (approximate average slope): %

(c) Flow:
Tributary provides for: **Pick List**
Estimate average number of flow events in review area/year: **Pick List**
Describe flow regime: .
Other information on duration and volume: .

Surface flow is: **Pick List.** Characteristics: .

Subsurface flow: **Pick List.** Explain findings: .
- ☐ Dye (or other) test performed: .

Tributary has (check all that apply):
- ☐ Bed and banks
- ☐ OHWM[6] (check all indicators that apply):
  - ☐ clear, natural line impressed on the bank
  - ☐ changes in the character of soil
  - ☐ shelving
  - ☐ vegetation matted down, bent, or absent
  - ☐ leaf litter disturbed or washed away
  - ☐ sediment deposition
  - ☐ water staining
  - ☐ other (list):
  - ☐ the presence of litter and debris
  - ☐ destruction of terrestrial vegetation
  - ☐ the presence of wrack line
  - ☐ sediment sorting
  - ☐ scour
  - ☐ multiple observed or predicted flow events
  - ☐ abrupt change in plant community
- ☐ Discontinuous OHWM.[7] Explain: .

If factors other than the OHWM were used to determine lateral extent of CWA jurisdiction (check all that apply):
- ☐ Higb Tide Line indicated by:
  - ☐ oil or scum line along shore objects
  - ☐ fine shell or debris deposits (foreshore)
  - ☐ physical markings/characteristics
  - ☐ tidal gauges
  - ☐ other (list):
- ☐ Mean High Water Mark indicated by:
  - ☐ survey to available datum;
  - ☐ physical markings;
  - ☐ vegetation lines/changes in vegetation types.

(iii) Chemical Characteristics:
Characterize tributary (e.g., water color is clear, discolored, oily film; water quality; general watershed characteristics, etc.).
Explain: .
Identify specific pollutants, if known: .

[6]A natural or man-made discontinuity in the OHWM does not necessarily sever jurisdiction (e.g., where the stream temporarily flows underground, or where the OHWM has been removed by development or agricultural practices). Where there is a break in the OHWM that is unrelated to the waterbody's flow regime (e.g., flow over a rock outcrop or through a culvert), the agencies will look for indicators of flow above and below the break.
[7]Ibid.

(iv) Biological Characteristics. Channel supports (check all that apply):

- ☐ Riparian corridor. Characteristics (type, average width): .
- ☐ Wetland fringe. Characteristics: .
- ☐ Habitat for:
  - ☐ Federally Listed species. Explain findings: .
  - ☐ Fish/spawn areas. Explain findings: .
  - ☐ Other environmentally-sensitive species. Explain findings: .
  - ☐ Aquatic/wildlife diversity. Explain findings: .

2. Characteristics of wetlands adjacent to non-TNW that flow directly or indirectly into TNW

(i) Physical Characteristics:

(a) General Wetland Characteristics:

Properties:

Wetland size: acres

Wetland type. Explain: .

Wetland quality. Explain: .

Project wetlands cross or serve as state boundaries. Explain: .

(b) General Flow Relationship with Non-TNW:

Flow is: **Pick List**. Explain: .

Surface flow is: **Pick List**

Characteristics: .

Subsurface flow: **Pick List**. Explain findings: .

- ☐ Dye (or other) test performed: .

(c) Wetland Adjacency Determination with Non-TNW:

- ☐ Directly abutting
- ☐ Not directly abutting
  - ☐ Discrete wetland hydrologic connection. Explain: .
  - ☐ Ecological connection. Explain: .
  - ☐ Separated by berm/barrier. Explain: .

(d) Proximity (Relationship) to TNW

Project wetlands are **Pick List** river miles from TNW.

Project waters are **Pick List** aerial (straight) miles from TNW.

Flow is from: **Pick List.**

Estimate approximate location of wetland as within the **Pick List** floodplain.

(ii) Chemical Characteristics:

Characterize wetland system (e.g., water color is clear, brown, oil film on surface; water quality; general watershed characteristics; etc.). Explain: .

Identify specific pollutants, if known: .

(iii) Biological Characteristics. Wetland supports (check all that apply):

- ☐ Riparian buffer. Characteristics (type, average width): .
- ☐ Vegetation type/percent cover. Explain: .
- ☐ Habitat for:
  - ☐ Federally Listed species. Explain findings: .
  - ☐ Fish/spawn areas. Explain findings: .
  - ☐ Other environmentally-sensitive species. Explain findings: .
  - ☐ Aquatic/wildlife diversity. Explain findings: .

3. Characteristics of all wetlands adjacent to the tributary (if any)

All wetland(s) being considered in the cumulative analysis: **Pick List**

Approximately ( ) acres in total are being considered in the cumulative analysis.

For each wetland, specify the following:

Directly abuts? (Y/N)	Size (in acres)	Directly abuts? (Y/N)	Size (in acres)

Summarize overall biological, chemical and physical functions being performed:

C. SIGNIFICANT NEXUS DETERMINATION

A significant nexus analysis will assess the flow characteristics and functions of the tributary itself and the functions performed by any wetlands adjacent to the tributary to determine if they significantly affect the chemical, physical, and biological integrity of a TNW. For each of the following situations, a significant nexus exists if the tributary, in combination with all of its adjacent wetlands, has more than a speculative or insubstantial effect on the chemical, physical and/or biological integrity of a TNW. Considerations when evaluating significant nexus include, but are not limited to the volume, duration, and frequency of the flow of water in the tributary and its proximity to a TNW, and the functions performed by the tributary and all its adjacent wetlands. It is not appropriate to determine significant nexus based solely on any specific threshold of distance (e.g. between a tributary and its adjacent wetland or between a tributary and the TNW). Similarly, the fact an adjacent wetland lies within or outside of a floodplain is not solely determinative of significant nexus.

Draw connections between the features documented and the effects on the TNW, as identified in the *Rapanos* Guidance and discussed in the Instructional Guidebook. Factors to consider include, for example:

- Does the tributary, in combination with its adjacent wetlands (if any), have the capacity to carry pollutants or flood waters to TNWs, or to reduce the amount of pollutants or flood waters reaching a TNW?
- Does the tributary, in combination with its adjacent wetlands (if any), provide habitat and lifecycle support functions for fish and other species, such as feeding, nesting, spawning, or rearing young for species that are present in the TNW?
- Does the tributary, in combination with its adjacent wetlands (if any), have the capacity to transfer nutrients and organic carbon that support downstream foodwebs?
- Does the tributary, in combination with its adjacent wetlands (if any), have other relationships to the physical, chemical, or biological integrity of the TNW?

Note: the above list of considerations is not inclusive and other functions observed or known to occur should be documented below:

1. **Significant nexus findings for non-RPW that has no adjacent wetlands and flows directly or indirectly into TNWs.** Explain findings of presence or absence of significant nexus below, based on the tributary itself, then go to Section III.D:

2. **Significant nexus findings for non-RPW and its adjacent wetlands, where the non-RPW flows directly or indirectly into TNWs.** Explain findings of presence or absence of significant nexus below, based on the tributary in combination with all of its adjacent wetlands, then go to Section III.D:

3. **Significant nexus findings for wetlands adjacent to an RPW but that do not directly abut the RPW.** Explain findings of presence or absence of significant nexus below, based on the tributary in combination with all of its adjacent wetlands, then go to Section III.D:

D. DETERMINATIONS OF JURISDICTIONAL FINDINGS. THE SUBJECT WATERS/WETLANDS ARE (CHECK ALL THAT APPLY):

1. **TNWs and Adjacent Wetlands.** Check all that apply and provide size estimates in review area:
   - ☐ TNWs: linear feet width (ft), Or, acres.
   - ☐ Wetlands adjacent to TNWs: acres.

2. **RPWs that flow directly or indirectly into TNWs.**
   - ☐ Tributaries of TNWs where tributaries typically flow year-round are jurisdictional. Provide data and rationale indicating that tributary is perennial:
   - ☐ Tributaries of TNW where tributaries have continuous flow "seasonally" (e.g., typically three months each year) are jurisdictional. Data supporting this conclusion is provided at Section III.B. Provide rationale indicating that tributary flows seasonally:

Provide estimates for jurisdictional waters in the review area (check all that apply):
☐ Tributary waters: linear feet width (ft).
☐ Other non-wetland waters: acres.
Identify type(s) of waters: .

3. **Non-RPWs[8] that flow directly or indirectly into TNWs.**
☐ Waterbody that is not a TNW or an RPW, but flows directly or indirectly into a TNW, and it has a significant nexus with a TNW is jurisdictional. Data supporting this conclusion is provided at Section III.C.

Provide estimates for jurisdictional waters within the review area (check all that apply):
☐ Tributary waters: linear feet width (ft).
☐ Other non-wetland waters: acres.
Identify type(s) of waters: .

4. **Wetlands directly abutting an RPW that flow directly or indirectly into TNWs.**
☐ Wetlands directly abut RPW and thus are jurisdictional as adjacent wetlands.
☐ Wetlands directly abutting an RPW where tributaries typically flow year-round. Provide data and rationale indicating that tributary is perennial in Section III.D.2, above. Provide rationale indicating that wetland is directly abutting an RPW: .

☐ Wetlands directly abutting an RPW where tributaries typically flow "seasonally." Provide data indicating that tributary is seasonal in Section III.B and rationale in Section III.D.2, above. Provide rationale indicating that wetland is directly abutting an RPW: .

Provide acreage estimates for jurisdictional wetlands in the review area: acres.

5. **Wetlands adjacent to but not directly abutting an RPW that flow directly or indirectly into TNWs.**
☐ Wetlands that do not directly abut an RPW, but when considered in combination with the tributary to which they are adjacent and with similarly situated adjacent wetlands, have a significant nexus with a TNW are jurisidictional. Data supporting this conclusion is provided at Section III.C.

Provide acreage estimates for jurisdictional wetlands in the review area: acres.

6. **Wetlands adjacent to non-RPWs that flow directly or indirectly into TNWs.**
☐ Wetlands adjacent to such waters, and have when considered in combination with the tributary to which they are adjacent and with similarly situated adjacent wetlands, have a significant nexus with a TNW are jurisdictional. Data supporting this conclusion is provided at Section III.C.

Provide estimates for jurisdictional wetlands in the review area: acres.

7. **Impoundments of jurisdictional waters.[9]**
As a general rule, the impoundment of a jurisdictional tributary remains jurisdictional.
☐ Demonstrate that impoundment was created from "waters of the U.S.," or
☐ Demonstrate that water meets the criteria for one of the categories presented above (1-6), or
☐ Demonstrate that water is isolated with a nexus to commerce (see E below).

E. ISOLATED [INTERSTATE OR INTRA-STATE] WATERS, INCLUDING ISOLATED WETLANDS, THE USE, DEGRADATION OR DESTRUCTION OF WHICH COULD AFFECT INTERSTATE COMMERCE, INCLUDING ANY SUCH WATERS (CHECK ALL THAT APPLY):[10]
☐ which are or could be used by interstate or foreign travelers for recreational or other purposes.
☐ from which fish or shellfish are or could be taken and sold in interstate or foreign commerce.
☐ which are or could be used for industrial purposes by industries in interstate commerce.
☐ Interstate isolated waters. Explain: .
☐ Other factors. Explain: .

Identify water body and summarize rationale supporting determination: .

---

[8] See Footnote # 3.
[9] To complete the analysis refer to the key in Section III.D.6 of the Instructional Guidebook.
[10] **Prior to asserting or declining CWA jurisdiction based solely on this category, Corps Districts will elevate the action to Corps and EPA HQ for review consistent with the process described in the Corps/EPA *Memorandum Regarding CWA Act Jurisdiction Following Rapanos.***

Provide estimates for jurisdictional waters in the review area (check all that apply):
☐ Tributary waters: linear feet width (ft).
☐ Other non-wetland waters: acres.
Identify type(s) of waters: .
☐ Wetlands: acres.

F. NON-JURISDICTIONAL WATERS, INCLUDING WETLANDS (CHECK ALL THAT APPLY):
☐ If potential wetlands were assessed within the review area, these areas did not meet the criteria in the 1987 Corps of Engineers Wetland Delineation Manual and/or appropriate Regional Supplements.
☒ Review area included isolated waters with no substantial nexus to interstate (or foreign) commerce.
☒ Prior to the Jan 2001 Supreme Court decision in "*SWANCC*," the review area would have been regulated based solely on the "Migratory Bird Rule" (MBR).
☐ Waters do not meet the "Significant Nexus" standard, where such a finding is required for jurisdiction. Explain: .
☐ Other: (explain, if not covered above): .

Provide acreage estimates for non-jurisdictional waters in the review area, where the sole potential basis of jurisdiction is the MBR factors (i.e., presence of migratory birds, presence of endangered species, use of water for irrigated agriculture), using best professional judgment (check all that apply):
☐ Non-wetland waters (i.e., rivers, streams): linear feet width (ft).
☒ Lakes/ponds: 9.44 acres.
☐ Other non-wetland waters: acres. List type of aquatic resource: .
☐ Wetlands: acres.

Provide acreage estimates for non-jurisdictional waters in the review area that do not meet the "Significant Nexus" standard, where such a finding is required for jurisdiction (check all that apply):
☐ Non-wetland waters (i.e., rivers, streams): linear feet, width (ft).
☐ Lakes/ponds: acres.
☐ Other non-wetland waters: acres. List type of aquatic resource: .
☐ Wetlands: acres.

SECTION IV: DATA SOURCES.

A. SUPPORTING DATA. Data reviewed for JD (check all that apply - checked items shall be included in case file and, where checked and requested, appropriately reference sources below):
☒ Maps, plans, plots or plat submitted by or on behalf of the applicant/consultant: Jurisdictional Delineation Report: Potential Jurisdictional Waters of the U.S. and State.
☒ Data sheets prepared/submitted by or on behalf of the applicant/consultant.
☒ Office concurs with data sheets/delineation report.
☐ Office does not concur with data sheets/delineation report.
☐ Data sheets prepared by the Corps: .
☐ Corps navigable waters' study: .
☐ U.S. Geological Survey Hydrologic Atlas: .
☐ USGS NHD data.
☐ USGS 8 and 12 digit HUC maps.
☐ U.S. Geological Survey map(s). Cite scale & quad name: .
☒ USDA Natural Resources Conservation Service Soil Survey. Citation: USDA. 1986. Soil Conservation Service Soil Survey of San Bernardino County California-Mojave River Area.
☐ National wetlands inventory map(s). Cite name: .
☐ State/Local wetland inventory map(s): .
☐ FEMA/FIRM maps: .
☐ 100-year Floodplain Elevation is: (National Geodectic Vertical Datum of 1929)
☒ Photographs: ☒ Aerial (Name & Date): Juris. Delineation Report: Potential Jurisdictional Waters of the U.S. and State (2005).
or ☐ Other (Name & Date): .
☐ Previous determination(s). File no. and date of response letter: .
☐ Applicable/supporting case law: .
☐ Applicable/supporting scientific literature: .
☒ Other information (please specify): Field visit on January 14, 2010 supported this JD.

B. ADDITIONAL COMMENTS TO SUPPORT JD: .

APPROVED JURISDICTIONAL DETERMINATION FORM
U.S. Army Corps of Engineers

This form should be completed by following the instructions provided in Section IV of the JD Form Instructional Guidebook.

SECTION I: BACKGROUND INFORMATION

A. REPORT COMPLETION DATE FOR APPROVED JURISDICTIONAL DETERMINATION (JD): February 3, 2010

B. DISTRICT OFFICE, FILE NAME, AND NUMBER: SPL-2009-00928-SME-JD3

C. PROJECT LOCATION AND BACKGROUND INFORMATION:

State: California County/parish/borough: San Bernardino City: Lockhart
Center coordinates of site (lat/long in degree decimal format): Lat. 35.01449° N, Long. -117.32124° W.
Universal Transverse Mercator:
Name of nearest waterbody: Harper Dry Lake
Name of nearest Traditional Navigable Water (TNW) into which the aquatic resource flows: None (isolated)
Name of watershed or Hydrologic Unit Code (HUC): Coyote-Cuddleback Lakes Watershed (HUC 18090207)

- ☒ Check if map/diagram of review area and/or potential jurisdictional areas is/are available upon request.
- ☒ Check if other sites (e.g., offsite mitigation sites, disposal sites, etc…) are associated with this action and are recorded on a different JD form.

D. REVIEW PERFORMED FOR SITE EVALUATION (CHECK ALL THAT APPLY):

- ☒ Office (Desk) Determination. Date: February 1, 2010
- ☒ Field Determination. Date(s): January 14, 2010

SECTION II: SUMMARY OF FINDINGS

A. RHA SECTION 10 DETERMINATION OF JURISDICTION.

There **Are no** "*navigable waters of the U.S.*" within Rivers and Harbors Act (RHA) jurisdiction (as defined by 33 CFR part 329) in the review area. [*Required*]

- ☐ Waters subject to the ebb and flow of the tide.
- ☐ Waters are presently used, or have been used in the past, or may be susceptible for use to transport interstate or foreign commerce. Explain: .

B. CWA SECTION 404 DETERMINATION OF JURISDICTION.

There **Are no** "*waters of the U.S.*" within Clean Water Act (CWA) jurisdiction (as defined by 33 CFR part 328) in the review area. [*Required*]

1. **Waters of the U.S.**
   a. **Indicate presence of waters of U.S. in review area (check all that apply):** [1]
   - ☐ TNWs, including territorial seas
   - ☐ Wetlands adjacent to TNWs
   - ☐ Relatively permanent waters[2] (RPWs) that flow directly or indirectly into TNWs
   - ☐ Non-RPWs that flow directly or indirectly into TNWs
   - ☐ Wetlands directly abutting RPWs that flow directly or indirectly into TNWs
   - ☐ Wetlands adjacent to but not directly abutting RPWs that flow directly or indirectly into TNWs
   - ☐ Wetlands adjacent to non-RPWs that flow directly or indirectly into TNWs
   - ☐ Impoundments of jurisdictional waters
   - ☐ Isolated (interstate or intrastate) waters, including isolated wetlands

   b. **Identify (estimate) size of waters of the U.S. in the review area:**
   Non-wetland waters: linear feet: width (ft) and/or acres.
   Wetlands: acres.

   c. **Limits (boundaries) of jurisdiction** based on: **Pick List**
   Elevation of established OHWM (if known): .

2. **Non-regulated waters/wetlands (check if applicable):**[3]
   - ☐ Potentially jurisdictional waters and/or wetlands were assessed within the review area and determined to be not jurisdictional. Explain: .

---

[1] Boxes checked below shall be supported by completing the appropriate sections in Section III below.
[2] For purposes of this form, an RPW is defined as a tributary that is not a TNW and that typically flows year-round or has continuous flow at least "seasonally" (e.g., typically 3 months).
[3] Supporting documentation is presented in Section III.F.

SECTION III: CWA ANALYSIS

A. TNWs AND WETLANDS ADJACENT TO TNWs

The agencies will assert jurisdiction over TNWs and wetlands adjacent to TNWs. If the aquatic resource is a TNW, complete Section III.A.1 and Section III.D.1. only; if the aquatic resource is a wetland adjacent to a TNW, complete Sections III.A.1 and 2 and Section III.D.1.; otherwise, see Section III.B below.

1. **TNW**
   Identify TNW: .

   Summarize rationale supporting determination: .

2. **Wetland adjacent to TNW**
   Summarize rationale supporting conclusion that wetland is "adjacent": .

B. CHARACTERISTICS OF TRIBUTARY (THAT IS NOT A TNW) AND ITS ADJACENT WETLANDS (IF ANY):

This section summarizes information regarding characteristics of the tributary and its adjacent wetlands, if any, and it helps determine whether or not the standards for jurisdiction established under *Rapanos* have been met.

The agencies will assert jurisdiction over non-navigable tributaries of TNWs where the tributaries are "relatively permanent waters" (RPWs), i.e. tributaries that typically flow year-round or have continuous flow at least seasonally (e.g., typically 3 months). A wetland that directly abuts an RPW is also jurisdictional. If the aquatic resource is not a TNW, but has year-round (perennial) flow, skip to Section III.D.2. If the aquatic resource is a wetland directly abutting a tributary with perennial flow, skip to Section III.D.4.

A wetland that is adjacent to but that does not directly abut an RPW requires a significant nexus evaluation. Corps districts and EPA regions will include in the record any available information that documents the existence of a significant nexus between a relatively permanent tributary that is not perennial (and its adjacent wetlands if any) and a traditional navigable water, even though a significant nexus finding is not required as a matter of law.

If the waterbody[4] is not an RPW, or a wetland directly abutting an RPW, a JD will require additional data to determine if the waterbody has a significant nexus with a TNW. If the tributary has adjacent wetlands, the significant nexus evaluation must consider the tributary in combination with all of its adjacent wetlands. This significant nexus evaluation that combines, for analytical purposes, the tributary and all of its adjacent wetlands is used whether the review area identified in the JD request is the tributary, or its adjacent wetlands, or both. If the JD covers a tributary with adjacent wetlands, complete Section III.B.1 for the tributary, Section III.B.2 for any onsite wetlands, and Section III.B.3 for all wetlands adjacent to that tributary, both onsite and offsite. The determination whether a significant nexus exists is determined in Section III.C below.

1. **Characteristics of non-TNWs that flow directly or indirectly into TNW**

   (i) **General Area Conditions:**
   Watershed size: **Pick List**
   Drainage area: **Pick List**
   Average annual rainfall: inches
   Average annual snowfall: inches

   (ii) **Physical Characteristics:**
   (a) Relationship with TNW:
   ☐ Tributary flows directly into TNW.
   ☐ Tributary flows through **Pick List** tributaries before entering TNW.

   Project waters are **Pick List** river miles from TNW.
   Project waters are **Pick List** river miles from RPW.
   Project waters are **Pick List** aerial (straight) miles from TNW.
   Project waters are **Pick List** aerial (straight) miles from RPW.
   Project waters cross or serve as state boundaries. Explain: .

   Identify flow route to TNW[5]: .
   Tributary stream order, if known: .

[4] Note that the Instructional Guidebook contains additional information regarding swales, ditches, washes, and erosional features generally and in the arid West.
[5] Flow route can be described by identifying, e.g., tributary a, which flows through the review area, to flow into tributary b, which then flows into TNW.

(b) General Tributary Characteristics (check all that apply):

Tributary is:
- ☐ Natural
- ☐ Artificial (man-made). Explain: .
- ☐ Manipulated (man-altered). Explain: .

Tributary properties with respect to top of bank (estimate):
Average width: feet
Average depth: feet
Average side slopes: **Pick List.**

Primary tributary substrate composition (check all that apply):
- ☐ Silts
- ☐ Sands
- ☐ Concrete
- ☐ Cobbles
- ☐ Gravel
- ☐ Muck
- ☐ Bedrock
- ☐ Vegetation. Type/% cover:
- ☐ Other. Explain: .

Tributary condition/stability [e.g., highly eroding, sloughing banks]. Explain: .
Presence of run/riffle/pool complexes. Explain: .
Tributary geometry: **Pick List**
Tributary gradient (approximate average slope): %

(c) Flow:
Tributary provides for: **Pick List**
Estimate average number of flow events in review area/year: **Pick List**
Describe flow regime: .
Other information on duration and volume: .

Surface flow is: **Pick List.** Characteristics: .

Subsurface flow: **Pick List**. Explain findings: .
- ☐ Dye (or other) test performed: .

Tributary has (check all that apply):
- ☐ Bed and banks
- ☐ OHWM[6] (check all indicators that apply):
  - ☐ clear, natural line impressed on the bank
  - ☐ changes in the character of soil
  - ☐ shelving
  - ☐ vegetation matted down, bent, or absent
  - ☐ leaf litter disturbed or washed away
  - ☐ sediment deposition
  - ☐ water staining
  - ☐ other (list):
  - ☐ the presence of litter and debris
  - ☐ destruction of terrestrial vegetation
  - ☐ the presence of wrack line
  - ☐ sediment sorting
  - ☐ scour
  - ☐ multiple observed or predicted flow events
  - ☐ abrupt change in plant community
- ☐ Discontinuous OHWM.[7] Explain: .

If factors other than the OHWM were used to determine lateral extent of CWA jurisdiction (check all that apply):
- ☐ High Tide Line indicated by:
  - ☐ oil or scum line along shore objects
  - ☐ fine shell or debris deposits (foreshore)
  - ☐ physical markings/characteristics
  - ☐ tidal gauges
  - ☐ other (list):
- ☐ Mean High Water Mark indicated by:
  - ☐ survey to available datum;
  - ☐ physical markings;
  - ☐ vegetation lines/changes in vegetation types.

(iii) Chemical Characteristics:
Characterize tributary (e.g., water color is clear, discolored, oily film; water quality; general watershed characteristics, etc.).
Explain: .
Identify specific pollutants, if known: .

---

[6] A natural or man-made discontinuity in the OHWM does not necessarily sever jurisdiction (e.g., where the stream temporarily flows underground, or where the OHWM has been removed by development or agricultural practices). Where there is a break in the OHWM that is unrelated to the waterbody's flow regime (e.g., flow over a rock outcrop or through a culvert), the agencies will look for indicators of flow above and below the break.
[7] Ibid.

(iv) Biological Characteristics. Channel supports (check all that apply):

- ☐ Riparian corridor. Characteristics (type, average width): .
- ☐ Wetland fringe. Characteristics: .
- ☐ Habitat for:
  - ☐ Federally Listed species. Explain findings: .
  - ☐ Fish/spawn areas. Explain findings: .
  - ☐ Other environmentally-sensitive species. Explain findings: .
  - ☐ Aquatic/wildlife diversity. Explain findings: .

2. Characteristics of wetlands adjacent to non-TNW that flow directly or indirectly into TNW

(i) Physical Characteristics:

(a) General Wetland Characteristics:

Properties:

Wetland size: acres

Wetland type. Explain: .

Wetland quality. Explain: .

Project wetlands cross or serve as state boundaries. Explain: .

(b) General Flow Relationship with Non-TNW:

Flow is: **Pick List**. Explain: .

Surface flow is: **Pick List**

Characteristics: .

Subsurface flow: **Pick List**. Explain findings: .

- ☐ Dye (or other) test performed: .

(c) Wetland Adjacency Determination with Non-TNW:

- ☐ Directly abutting
- ☐ Not directly abutting
  - ☐ Discrete wetland hydrologic connection. Explain: .
  - ☐ Ecological connection. Explain: .
  - ☐ Separated by berm/barrier. Explain: .

(d) Proximity (Relationship) to TNW

Project wetlands are **Pick List** river miles from TNW.

Project waters are **Pick List** aerial (straight) miles from TNW.

Flow is from: **Pick List.**

Estimate approximate location of wetland as within the **Pick List** floodplain.

(ii) Chemical Characteristics:

Characterize wetland system (e.g., water color is clear, brown, oil film on surface; water quality; general watershed characteristics; etc.). Explain: .

Identify specific pollutants, if known: .

(iii) Biological Characteristics. Wetland supports (check all that apply):

- ☐ Riparian buffer. Characteristics (type, average width): .
- ☐ Vegetation type/percent cover. Explain: .
- ☐ Habitat for:
  - ☐ Federally Listed species. Explain findings: .
  - ☐ Fish/spawn areas. Explain findings: .
  - ☐ Other environmentally-sensitive species. Explain findings: .
  - ☐ Aquatic/wildlife diversity. Explain findings: .

3. Characteristics of all wetlands adjacent to the tributary (if any)

All wetland(s) being considered in the cumulative analysis: **Pick List**

Approximately ( ) acres in total are being considered in the cumulative analysis.

For each wetland, specify the following:

Directly abuts? (Y/N)	Size (in acres)	Directly abuts? (Y/N)	Size (in acres)

Summarize overall biological, chemical and physical functions being performed:

C. SIGNIFICANT NEXUS DETERMINATION

A significant nexus analysis will assess the flow characteristics and functions of the tributary itself and the functions performed by any wetlands adjacent to the tributary to determine if they significantly affect the chemical, physical, and biological integrity of a TNW. For each of the following situations, a significant nexus exists if the tributary, in combination with all of its adjacent wetlands, has more than a speculative or insubstantial effect on the chemical, physical and/or biological integrity of a TNW. Considerations when evaluating significant nexus include, but are not limited to the volume, duration, and frequency of the flow of water in the tributary and its proximity to a TNW, and the functions performed by the tributary and all its adjacent wetlands. It is not appropriate to determine significant nexus based solely on any specific threshold of distance (e.g. between a tributary and its adjacent wetland or between a tributary and the TNW). Similarly, the fact an adjacent wetland lies within or ontside of a floodplain is not solely determinative of significant nexus.

Draw connections between the features documented and the effects on the TNW, as identified in the *Rapanos* Guidance and discussed in the Instructional Guidebook. Factors to consider include, for example:

- Does the tributary, in combination with its adjacent wetlands (if any), have the capacity to carry pollutants or flood waters to TNWs, or to reduce the amount of pollutants or flood waters reaching a TNW?
- Does the tributary, in combination with its adjacent wetlands (if any), provide habitat and lifecycle support functions for fish and other species, such as feeding, nesting, spawning, or rearing young for species that are present in the TNW?
- Does the tributary, in combination with its adjacent wetlands (if any), have the capacity to transfer nutrients and organic carbon that support downstream foodwebs?
- Does the tributary, in combination with its adjacent wetlands (if any), have other relationships to the physical, chemical, or biological integrity of the TNW?

Note: the above list of considerations is not inclusive and other functions observed or known to occur should be documented below:

1. **Significant nexus findings for non-RPW that has no adjacent wetlands and flows directly or indirectly into TNWs.** Explain findings of presence or absence of significant nexus below, based on the tributary itself, then go to Section III.D:

2. **Significant nexus findings for non-RPW and its adjacent wetlands, where the non-RPW flows directly or indirectly into TNWs.** Explain findings of presence or absence of significant nexus below, based on the tributary in combination with all of its adjacent wetlands, then go to Section III.D:

3. **Significant nexus findings for wetlands adjacent to an RPW but that do not directly abut the RPW.** Explain findings of presence or absence of significant nexus below, based on the tributary in combination with all of its adjacent wetlands, then go to Section III.D:

D. DETERMINATIONS OF JURISDICTIONAL FINDINGS. THE SUBJECT WATERS/WETLANDS ARE (CHECK ALL THAT APPLY):

1. **TNWs and Adjacent Wetlands.** Check all that apply and provide size estimates in review area:
   - ☐ TNWs: linear feet width (ft), Or, acres.
   - ☐ Wetlands adjacent to TNWs: acres.

2. **RPWs that flow directly or indirectly into TNWs.**
   - ☐ Tributaries of TNWs where tributaries typically flow year-round are jurisdictional. Provide data and rationale indicating that tributary is perennial:
   - ☐ Tributaries of TNW where tributaries have continuous flow "seasonally" (e.g., typically three months each year) are jurisdictional. Data supporting this conclusion is provided at Section III.B. Provide rationale indicating that tributary flows seasonally:

Provide estimates for jurisdictional waters in the review area (check all that apply):
☐ Tributary waters: linear feet width (ft).
☐ Other non-wetland waters: acres.
Identify type(s) of waters: .

3. **Non-RPWs[8] that flow directly or indirectly into TNWs.**
☐ Waterbody that is not a TNW or an RPW, but flows directly or indirectly into a TNW, and it has a significant nexus with a TNW is jurisdictional. Data supporting this conclusion is provided at Section III.C.

Provide estimates for jurisdictional waters within the review area (check all that apply):
☐ Tributary waters: linear feet width (ft).
☐ Other non-wetland waters: acres.
Identify type(s) of waters: .

4. **Wetlands directly abutting an RPW that flow directly or indirectly into TNWs.**
☐ Wetlands directly abut RPW and thus are jurisdictional as adjacent wetlands.
☐ Wetlands directly abutting an RPW where tributaries typically flow year-round. Provide data and rationale indicating that tributary is perennial in Section III.D.2, above. Provide rationale indicating that wetland is directly abutting an RPW: .

☐ Wetlands directly abutting an RPW where tributaries typically flow "seasonally." Provide data indicating that tributary is seasonal in Section III.B and rationale in Section III.D.2, above. Provide rationale indicating that wetland is directly abutting an RPW: .

Provide acreage estimates for jurisdictional wetlands in the review area: acres.

5. **Wetlands adjacent to but not directly abutting an RPW that flow directly or indirectly into TNWs.**
☐ Wetlands that do not directly abut an RPW, but when considered in combination with the tributary to which they are adjacent and with similarly situated adjacent wetlands, have a significant nexus with a TNW are jurisidictional. Data supporting this conclusion is provided at Section III.C.

Provide acreage estimates for jurisdictional wetlands in the review area: acres.

6. **Wetlands adjacent to non-RPWs that flow directly or indirectly into TNWs.**
☐ Wetlands adjacent to such waters, and have when considered in combination with the tributary to which they are adjacent and with similarly situated adjacent wetlands, have a significant nexus with a TNW are jurisdictional. Data supporting this conclusion is provided at Section III.C.

Provide estimates for jurisdictional wetlands in the review area: acres.

7. **Impoundments of jurisdictional waters.[9]**
As a general rule, the impoundment of a jurisdictional tributary remains jurisdictional.
☐ Demonstrate that impoundment was created from "waters of the U.S.," or
☐ Demonstrate that water meets the criteria for one of the categories presented above (1-6), or
☐ Demonstrate that water is isolated with a nexus to commerce (see E below).

E. **ISOLATED [INTERSTATE OR INTRA-STATE] WATERS, INCLUDING ISOLATED WETLANDS, THE USE, DEGRADATION OR DESTRUCTION OF WHICH COULD AFFECT INTERSTATE COMMERCE, INCLUDING ANY SUCH WATERS (CHECK ALL THAT APPLY):[10]**
☐ which are or could be used by interstate or foreign travelers for recreational or other purposes.
☐ from which fish or shellfish are or could be taken and sold in interstate or foreign commerce.
☐ which are or could be used for industrial purposes by industries in interstate commerce.
☐ Interstate isolated waters. Explain: .
☐ Other factors. Explain: .

Identify water body and summarize rationale supporting determination: .

---

[8] See Footnote # 3.
[9] To complete the analysis refer to the key in Section III.D.6 of the Instructional Guidebook.
[10] **Prior to asserting or declining CWA jurisdiction based solely on this category, Corps Districts will elevate the action to Corps and EPA HQ for review consistent with the process described in the Corps/EPA *Memorandum Regarding CWA Act Jurisdiction Following Rapanos.***

DEPARTMENT OF THE ARMY
915 Wilshire Boulevard
Los Angeles, California 90017

February 26, 2010

REPLY TO
ATTENTION OF
Office of the Chief
Regulatory Division

Joshua Zinn
AECOM
1420 Kettner Boulevard, Suite 500
San Diego, California 92101

SUBJECT: Determination Regarding Requirement for Department of the Army Permit

Dear Mr. Zinn:

Reference is made to your request (File No. SPL-2009-00928-SME) dated August 26, 2009, for clarification on whether a Department of the Army Permit is required for the Abengoa Mojave Solar Energy Project (35.0173, -117.3058) located near the community of Lockhart, San Bernardino County, California.

As you may know, the Corps' evaluation process for determining whether or not a Department of the Army permit is needed involves two tests. If both tests are met, then a permit is required. The first test determines whether or not the proposed project is located in a water of the United States (i.e., it is within the Corps' geographic jurisdiction). The second test determines whether or not the proposed project is a regulated activity under Section 10 of the River and Harbor Act or Section 404 of the Clean Water Act. As part of our evaluation process, we have made the determination below.

Geographic Jurisdiction:

Based on the approved jurisdictional determination dated February 26, 2010, we have determined the Abengoa Mojave Solar Energy project site does not contain waters of the United States pursuant to 33 C.F.R. §325.9.

Activity:

Based on the information you have provided, we have determined the proposed work, were it to occur in waters of the U.S. (see above, *"Geographic Jurisdiction"*), would involve a discharge of dredged or fill material and therefore, would be regulated under Section 404 of the Clean Water Act if the activity is performed in the manner described in your request.

Requirement for a Department of the Army Permit:

Based on the discussion above, we have determined your proposed project is not subject to our jurisdiction under Section 404 of the Clean Water Act and a Section 404 permit would not be required from our office if the activity is performed in the manner described.

Notwithstanding our determination above, your proposed project may be regulated under other Federal, State, and local laws.

If you have any questions, please contact Stephen Estes at 213-452-3660 or via e-mail at Stephen.M.Estes@usace.army.mil.

Please be advised that you can now comment on your experience with Regulatory Division by accessing the Corps web-based customer survey form at: http://per2.nwp.usace.army.mil/survey.html.

Sincerely,

Mark Durham
Chief, South Coast Branch
Regulatory Division

Enclosures

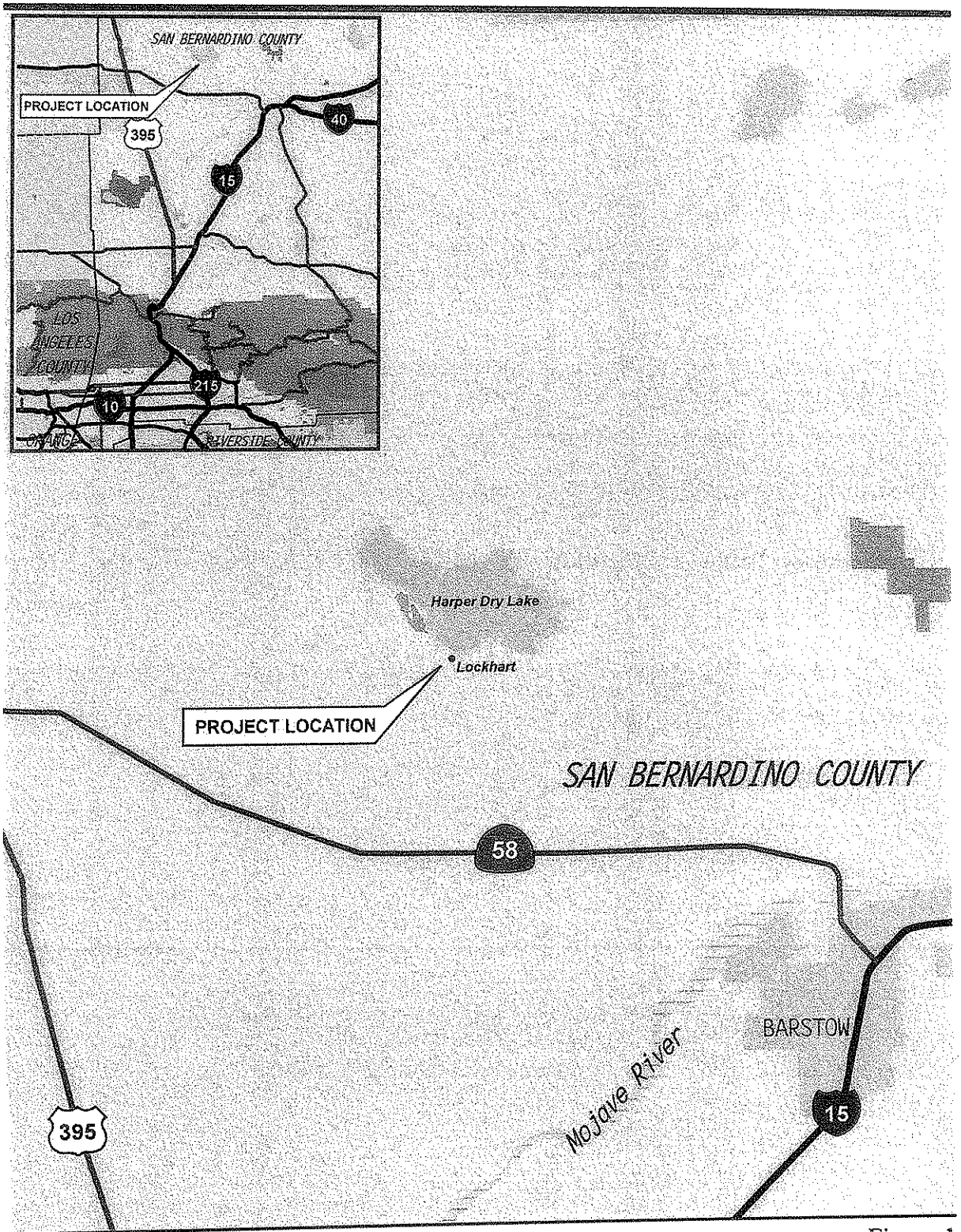

Source: Thomas Guide, 2007

4.5 2.25 0 4.5 Miles

Approximate Scale: 1 inch = 4.5 miles

Figure 1
Regional Map

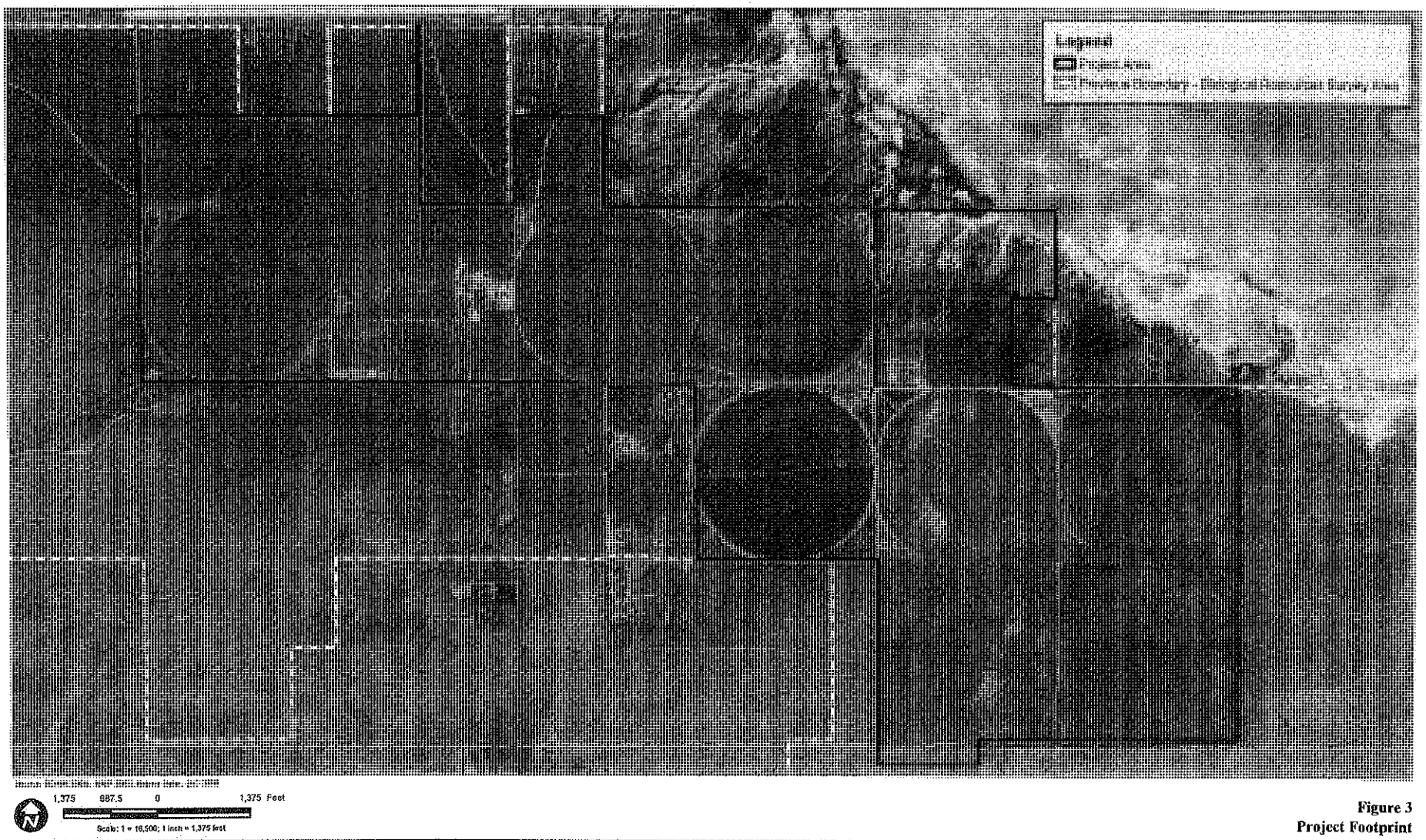

Figure 3
Project Footprint

Path: P:\2008\080301\91 Harper Lake Abengoa AFC\6.0 GIS\6.2 Project Directory\6.2.5 Layout\HICOWEST-ANDSAVDR_figures\fig 3_Project_footprint.mxd, 06/19/09, Angelica

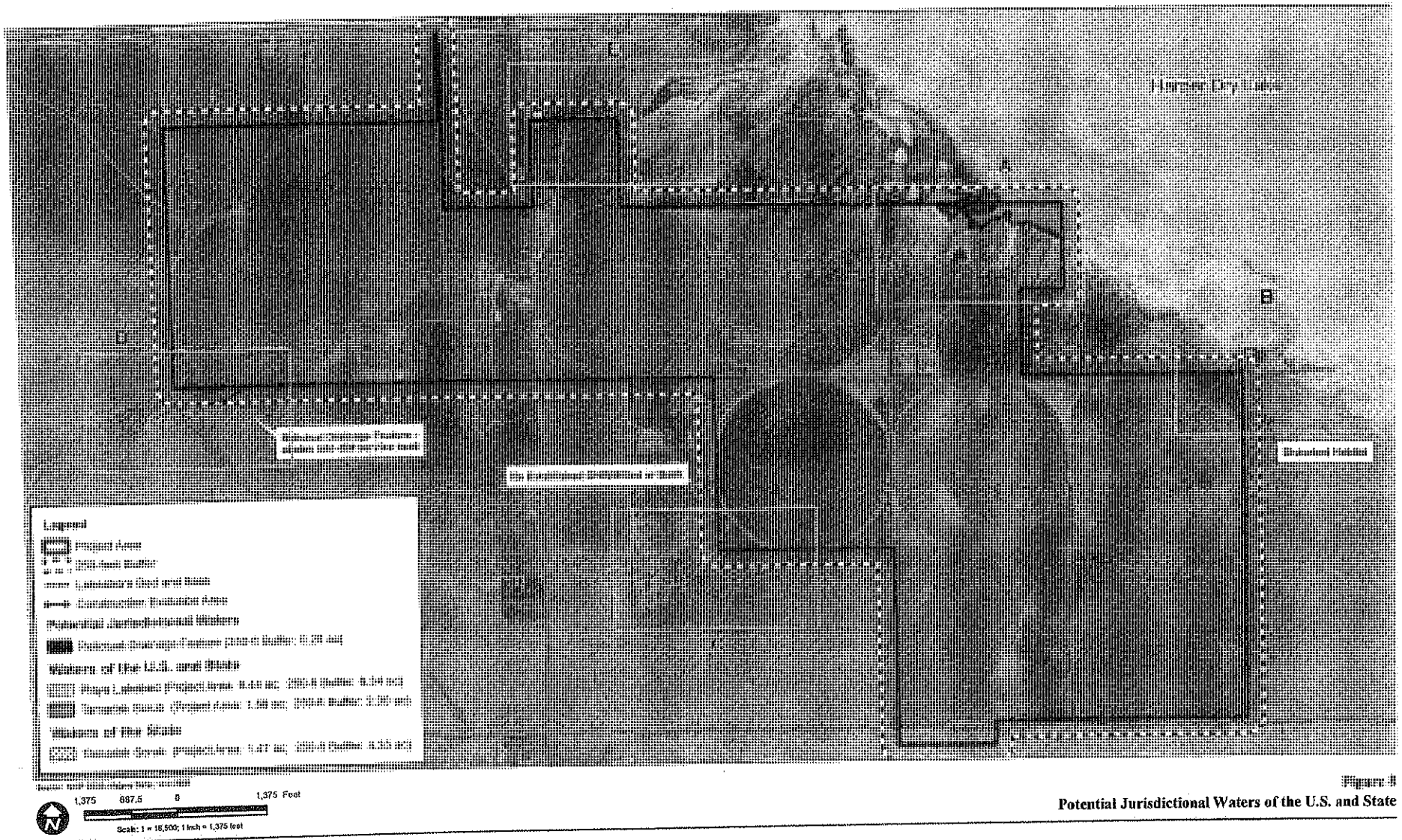

Figure 4

Potential Jurisdictional Waters of the U.S. and State

Path: P:\2008\08080191 Harper Lake Abengoa\BC\6.0 GIS\6.2 Project Directory\6.2.3 Layout\BIO\WETLANDS\JDR_figures\2010\fig 4 potential_JD_waters.mxd, 01/22/10, Leif

Department of Energy
Washington, DC 20585

February 14, 2011

Ms. Ann Brierty
San Manuel Band of Mission Indians
Environmental Division
26569 Community Center Drive
Highland, CA 92346

Subject: Consultation for the Abengoa Mojave Solar Project

Dear Ms. Brierty:

In my September 27, 2010, letter to you I indicated that the US Department of Energy (DOE) is considering issuing a loan guarantee to support construction of the proposed Abengoa Mojave Solar Project (the Project), a solar thermal electric power plant nine miles northwest of Hinkley, California. The proposed power plant site would be located on previously farmed land. Telecommunication upgrades would also be required along existing transmission alignments. Minimal ground disturbance would occur along the alignments because existing access roads and poles would be used, with very few new or replacement poles needed.

My September 27 letter also noted that, with regard to the Project, DOE was serving as the lead federal agency for compliance with the National Environmental Policy Act (NEPA), and the US Bureau of Land Management (BLM) is cooperating with DOE in the NEPA review and is serving as the lead federal agency for compliance with the National Historic Preservation Act (NHPA) cultural resource review and Section 106 consultation process.

DOE has been working closely with BLM in the NHPA cultural review process and, as such, is familiar with the discussions you have had with Jim Shearer at BLM. I thank you for your comments thus far, and we look forward to participating with you in completing the environmental and cultural resource review process. DOE believes that consideration of any comments or concerns you provide, particularly with regard to sites of religious and cultural significance, will help ensure that DOE and BLM comply with our NEPA and NHPA Section 106 responsibilities for the Project. DOE and BLM remain available for continued government-to-government consultation on the Project at your request.

As part of our outreach, BLM requested that DOE inform you on the status of the cultural review. Class III cultural resource surveys have been completed at the proposed power plant site and along the transmission alignments. The surveys have identified archaeological sites in the project area. A table summarizing potential effects of the Project on these sites is attached.

Questions concerning the cultural review or Section 106 consultation process for the Project should be directed to Mr. Jim Shearer in the BLM Barstow Field Office (see contact information below). I would also appreciate being copied on correspondence to Mr. Shearer so I am apprised of any concerns that you might have. I can be reached by e-mail at matthew.mcmillen@hq.doe.gov , by phone at 202-586-

Printed with soy ink on recycled paper

7248, or by mail at US Department of Energy, Loan Programs Office, LP-10, 1000 Independence Ave. SW., Washington, DC 20585.

Respectfully,

Matthew C. McMillen
Director, Environmental Compliance
Loan Programs Office

Attachment

cc: Milford Wayne Donaldson, FAIA
State Historic Preservation Office

Mr. Jim Shearer
Barstow Field Office Archaeologist
Bureau of Land Management
2601 Barstow Road
Barstow, CA 92311
JShearer@BLM.gov
760.252.6034

Department of Energy
Washington, DC 20585

February 8, 2011

Honorable Charles Wood
Chairperson
Chemehuevi Reservation
P.O. Box 1976
Havasu Lake, CA 92363

Subject: Consultation for the Abengoa Mojave Solar Project

Dear Chairperson Wood:

In my September 27, 2010 letter to you, I indicated that the US Department of Energy (DOE) is considering issuing a loan guarantee to support construction of the proposed Abengoa Mojave Solar Project (the Project), a solar thermal electric power plant nine miles northwest of Hinkley, California. The proposed power plant site would be located on previously farmed land. Telecommunication upgrades would also be required along existing transmission alignments. Minimal ground disturbance would occur along the alignments because existing access roads and poles would be used, with very few new or replacement poles needed.

My September 27 letter also noted that, with regard to the Project, DOE was serving as the lead federal agency for compliance with the National Environmental Policy Act (NEPA), and the US Bureau of Land Management (BLM) is cooperating with DOE in the NEPA review and is serving as the lead federal agency for compliance with the National Historic Preservation Act (NHPA) cultural resource review and Section 106 consultation process.

DOE has been working closely with BLM in the NHPA cultural review process and, at BLM's request, would like to inform you of the status of the review. Class III cultural resource surveys have been completed at the proposed power plant site and along the transmission alignments. The surveys have identified archaeological sites in the project area. A table summarizing potential effects of the Project on these sites is attached.

As indicated in my September 27 letter, DOE is available for government-to-government consultation on the Project at your request, and looks forward to participating with you in completing the environmental and cultural resource review process. DOE believes that consideration of any comments or concerns you provide, particularly with regard to sites of religious and cultural significance, will help ensure that DOE and BLM comply with our NEPA and NHPA Section 106 responsibilities for the Project.

Questions concerning the cultural review or Section 106 consultation process for the Project should be directed to Mr. Jim Shearer in the BLM Barstow Field Office (see contact information below). I would also appreciate being copied on correspondence to Mr. Shearer so I am apprised

Printed with soy ink on recycled paper

of any concerns that you might have. I can be reached by e-mail at matthew.mcmillen@hq.doe.gov , by phone at 202-586-7248, or by mail at US Department of Energy, Loan Programs Office, LP-10, 1000 Independence Ave. SW, Washington, DC 20585.

Respectfully,

Matthew C. McMillen
Director, Environmental Compliance
Loan Programs Office

Enclosure

cc: Milford Wayne Donaldson, FAIA
State Historic Preservation Office

Mr. Jim Shearer
Barstow Field Office Archaeologist
Bureau of Land Management
2601 Barstow Road
Barstow, CA 92311
JShearer@BLM.gov
760.252.6034

February 8, 2011 – Additional Recipients of Letter

Honorable Lora Tom
Chairperson
Paiute Indian Tribe of Utah
440 N. Paiute Drive
Cedar City, Utah 84720-2613

Honorable Alfreda Mitre
Chairperson
Las Vegas Tribe of Paiute Indians
Number One Paiute Drive
Las Vegas, NV 89106

Honorable Timothy Williams
Chairman
Fort Mojave Indian Tribe
500 Merriman Avenue
Needles, CA 92363

Honorable Daniel Eddy
Chairman
Tribes of the Colorado River
26600 Mohave Road
Parker, AZ 85344

Honorable Darrell Mike
Chairperson
Twenty-Nine Palms Band of Mission Indians
46-200 Harrison Street
Coachella, CA 92236

Ms. June Leivas
Cultural Lead
Chemehuevi Reservation
PO Box 1976
Havasu Lake, CA 92363

Mr. Mike Contreras
Morongo Band of Mission Indians
Cultural Heritage Program
12700 Pumarra Road
Banning, CA 92220

Honorable Darren Daboda
Chairman
Moapa Band of Paiute Indians
PO Box 340
Moapa, NV 89025-0340

Honorable Ona Segundo
Chairperson
Kaiband Band of Paiute Indians
HC65, Box 2
Freedonia, AZ 86022

Mr. Ralph Bear
President
Fort McDowell Yavapai Nation
PO Box 17779
Fountain Hills, AZ 85268

Mr. Anthony Madrigal
Cultural Lead
Twenty-Nine Palms Band of Mission Indians
46-200 Harrison Street
Coachella, CA 92236

Honorable James Ramos
Chairman
San Manuel Band of Mission Indians
26569 Community Center Drive
Highland, CA 92346

Honorable Jamie Fuller
Chairman
Yavapai-Apache Nation of the Camp
2400 W. Datsi
Camp Verde, AZ 86322

Honorable Mike Martin
Chairperson
Morongo Band of Mission Indians
12700 Pumarra Road
Banning, CA 92220

Department of Energy
Washington, DC 20585

September 27, 2010

Honorable Charles Wood
Chairman
Chemehuevi Reservation
PO Box 1976
Havasu Lake, CA 92363

Subject: Federal Loan Guarantee to Abengoa Solar

Dear Chairman Wood:

The U.S. Department of Energy (DOE) is evaluating the application of a company called Abengoa Solar (Abengoa) for a Federal loan guarantee to construct a solar thermal electric power plant nine miles northwest of the town of Hinkley, California, in unincorporated San Bernardino County. DOE will be performing an environmental review of the Abengoa Project in compliance with the National Environmental Policy Act (NEPA).

In addition to the solar power plant, the proposed project would include transmission alignment telecom upgrades that cross Bureau of Land Management (BLM) land. BLM has agreed to be a cooperating agency in accordance with a Memorandum of Understanding between the DOE and BLM, signed in January 2010. Because of BLM's special expertise, DOE is deferring lead authority to BLM solely for activities pertaining to historic resources review to comply with Section 106 of the National Historic Preservation Act. Under DOE's deferment, and as provided for in 36 C.F.R § 800.2 (a) (2), BLM will act on DOE's behalf to fulfill the collective responsibilities of DOE and BLM under Section 106. Otherwise, DOE will continue to play an active role as the project lead for the NEPA review process, and is available for government-to-government consultation on those matters. BLM's point of contact is Mr. Jim Shearer, who is copied on this letter.

Our records show that your Tribe has expressed an historical interest in San Bernardino County, California. I am writing this letter to extend an opportunity to you to provide comments on the proposed loan guarantee to Abengoa. Consideration of any comments or concerns you provide will help ensure that DOE complies with its NEPA responsibilities.

The project would be located on 1,765 acres, approximately halfway between the city of Barstow and Kramer Junction (Highway 395/58 Junction). The site is in a rural area used previously for farming. To assist you, a more detailed description of the proposed project, and a map showing the proposed plant site (shown as AMSP), and transmission alignments (shown in red), are enclosed.

Printed with soy ink on recycled paper

Currently, a third-party consultant, AECOM, of San Diego, California is undertaking cultural resource Class III surveys for the entire project area. They may be contacting you to gather additional information.

We would greatly appreciate receiving any comments or concerns you may have regarding the NEPA review process by October 25, 2010. Please direct comments related to the Section 106 consultation process to Jim Shearer from the BLM's Barstow office. His contact information is provided below. Please also copy me via email to matthew.mcmillen@hq.doe.gov on comments sent to Mr. Shearer so that I am apprised of any concerns you might have. Written comments regarding the NEPA review can be sent via email to matthew.mcmillen@hq.doe.gov, or sent to the following address: U.S. Department of Energy, 1000 Independence Ave., SW, LP-10, Washington, DC 20585. I can also be reached by telephone at 202-586-7248.

Respectfully,

Matthew McMillen
Director, Environmental Compliance
DOE Loan Programs Office

Enclosures

cc: Milford Wayne Donaldson, FAIA
State Historic Preservation Officer

Mr. Jim Shearer
Barstow Field Office Archaeologist
Bureau of Land Management
2601 Barstow Rd.
Barstow, CA 92311
(760) 252.6034
jshearer@blm.gov

September 27, 2010 -- Additional Recipients of Letter

Ms. June Leivas, Cultural Lead
Chemehuevi Reservation
PO Box 1976
Havasu Lake, CA 92363

Honorable Robert Martin
Chairperson
Morongo Band of Mission Indians
12700 Pumarra Road
Banning, CA 92220

Honorable James Ramos
Chairman
San Manuel Band of Mission Indians
26569 Community Center Drive
Highland, CA 92346

Mr. Anthony Madrigal
Cultural Lead
Twenty-Nine Palms Band of Mission Indians
46-200 Harrison Street
Coachella, CA 92236

Mr. Ralph Bear
President
Fort McDowell Yavapai Nation
PO Box 17779
Fountain Hills, AZ 85268

Honorable Ona Segundo
Chairperson
Kaiband Band of Paiute Indians
HC65, Box 2
Freedonia, AZ 86022

Honorable Darren Daboda
Chairman
Moapa Band of Paiute Indians
PO Box 340
Moapa, NV 89025-0340

Honorable Jamie Fuller
Chairman
Yavapai-Apache Nation of the Camp
2400 W. Datsi
Camp Verde, AZ 86322

Mr. Mike Contreras
Morongo Band of Mission Indians
12700 Pumarra Road
Banning, CA 92220

Ms. Ann Brierty
Environmental Division
San Manuel Band of Mission Indians
26569 Community Center Drive
Highland, CA 92346

Honorable Darrell Mike
Chairperson
Twenty-Nine Palms Band of Mission Indians
46-200 Harrison Street
Coachella, CA 92236

Honorable Daniel Eddy
Chairman
Tribes of the Colorado River
26600 Mohave Road
Parker, AZ 85344

Honorable Timothy Williams
Chairman
Fort Mojave Indian Tribe
500 Merriman Avenue
Needles, CA 92363

Honorable Alfreda Mitre
Chairperson
Las Vegas Tribe of Paiute Indians
Number One Paiute Drive
Las Vegas, NV 89106

Honorable Lora Tom
Chairperson
Paiute Indian Tribe of Utah
440 N. Paiute Drive
Cedar City, Utah 84720-2613

APPENDIX S

ENVIRONMENTAL PROTECTION MEASURES, DESIGN MEASURES, BMPs, AND CONDITIONS OF CERTIFICATION FROM CEC LICENSE DECISION

TABLE S-1
ENVIRONMENTAL PROTECTION MEASURES, DESIGN MEASURES AND BMPs

The following measures are incorporated into the Project and were assumed in making the determinations of environmental effect in the respective EA Sections 3.1 through 3.13. California Energy Commission (CEC) Conditions of Certification (COC) from the Final License Decision are also included in Table S-1 for ease of reference, however the respective environmental effects sections also make reference to the applicable CEC COC's. The COC's include a number of CEC-specific acronyms and references that are not necessarily used in the EA and therefore the reader is directed to the Final License Decision for additional clarification:
http://www.energy.ca.gov/sitingcases/abengoa/documents/index.html

Environmental Protection Measures, Design Measures, BMPs, and CEC Conditions	Responsible Party	
	Mojave Solar	SCE [3]
Visual Resources		
1. Design Feature 1: The surfaces of all aboveground structures except the solar collectors (i.e., control building, administration building, warehouse, water treatment building, solar collector array assembly buildings, enclosures for mechanical and electrical equipment, substation MERS building, water storage tanks, etc.) will be given low reflectivity finishes with neutral desert tan colors sympathetic to the desert environment to minimize the contrast of the structures with their backdrops.	X	
2. Design Feature 2: All substation equipment will be specified with low reflectivity, neutral finishes. All insulators at the substations and on the takeoff equipment will be nonreflective and nonrefractive. The chain-link fences surrounding the substations and the Project site will have a dulled finish to reduce contrast with the desert surroundings.		X
3. Design Feature 3: For overhead transmission lines, tubular steel poles (TSPs) will be dulled galvanized steel. If concrete monopoles are used, they will be natural concrete with light-gray colors. All insulators specified for this Project will be made of materials that do not reflect or refract light. All conductors specified for the AMSP/Lockhart Substation site will be nonspecular; that is, they will be treated at the factory to dull their surfaces to reduce their potential to reflect light.	X	X
4. Design Feature 4: All construction-related operations at the construction laydown area will be kept clean and tidy. Mojave Solar will remove construction debris promptly at regular intervals, not to exceed 2 weeks at any one location.	X	X

[1] Applies only where ground disturbance is expected (trenching, replacement poles and interset poles).
[2] COC = Conditions of Certification from the CEC Final License Decision for the Abengoa Mojave Solar Plant Project.
[3] SCE maintains responsibility for implementation of environmental protection measures, design measures, and best management practices for the Lockhart Substation and SPS Project, as described in Chapter 2.0 of the EA, including the CEC Final License Decision COCs, which are applicable to the Lockhart Substation.

Environmental Protection Measures, Design Measures, BMPs, and CEC Conditions	Responsible Party	
	Mojave Solar	SCE [3]
5. Design Feature 5: All outdoor lighting will be the minimum required to meet safety and security standards and all light fixtures will be hooded to eliminate any potential for glare effects and to prevent light from spilling off the site or up into the sky. In addition, the light fixtures will have sensors and switches to permit the lighting to be turned off at times when it is not required.	X	X
6. Design Feature 6: The Applicant will voluntarily consult with residential property owners within 0.5 mile of the proposed AMSP/Lockhart site boundary to suggest offsite-planting on adjacent residential properties (if landowner is interested) to assist with visual screening of the AMSP/Lockhart site as seen from these single-family residential locations.	X	
Air Quality		
Design Measures		
1. The Applicant will have an onsite construction mitigation manager who will be responsible for the implementation and compliance of the construction mitigation program. The documentation of the ongoing implementation and compliance with the proposed construction mitigations will be provided on a periodic basis.	X	X
2. All unpaved roads and disturbed areas in the Project and laydown construction sites will be watered as frequently as necessary to control fugitive dust. The frequency of watering will be on a minimum schedule of every 2 hours during the daily construction activity period. Watering may be reduced or eliminated during periods of precipitation.	X	X
3. Vehicle speeds within the AMSP site will be limited to 10 mph on unpaved areas within the construction zones.	X	X
4. The AMSP construction site entrance(s) will be posted with visible speed limit signs.	X	
5. All construction equipment vehicle tires will be inspected and cleaned as necessary to be free of dirt prior to leaving the construction site via paved roadways.	X	X
6. Gravel ramps will be provided at the tire cleaning area within the AMSP site.	X	X
7. All unpaved exits from the AMSP construction site will be graveled or treated to reduce track-out to public roadways.	X	X
8. All construction vehicles will enter the AMSP construction site through the treated entrance roadways, unless an alternative route has been provided.	X	X

[1] Applies only where ground disturbance is expected (trenching, replacement poles and interset poles).
[2] COC = Conditions of Certification from the CEC Final License Decision for the Abengoa Mojave Solar Plant Project.
[3] SCE maintains responsibility for implementation of environmental protection measures, design measures, and best management practices for the Lockhart Substation and SPS Project, as described in Chapter 2.0 of the EA, including the CEC Final License Decision COCs, which are applicable to the Lockhart Substation.

Environmental Protection Measures, Design Measures, BMPs, and CEC Conditions	Responsible Party	
	Mojave Solar	SCE [3]
9. Construction areas adjacent to any paved roadway will be provided with sandbags or other similar measures as specified in the construction Storm Water Pollution Prevention Plan (SWPPP) to prevent runoff to roadways.	X	X
10. All paved roads within the AMSP construction site will be cleaned on a periodic basis (or less during periods of precipitation), to prevent the accumulation of dirt and debris.	X	
11. The first 500 feet of any public roadway exiting the AMSP construction site will be cleaned on a periodic basis (or less during periods of precipitation), using wet sweepers or air-filtered dry vacuum sweepers, when construction activity occurs or on any day when dirt or runoff from the construction site is visible on the public roadways.	X	X
12. Any soil storage piles and/or disturbed areas that remain inactive for longer than 14 days will be covered, or shall be treated with appropriate dust suppressant compounds.	X	X
13. All vehicles used to transport solid bulk material on public roadways and that have the potential to cause visible emissions will be covered, or the materials shall be sufficiently wetted and loaded onto the trucks in a manner to minimize fugitive dust emissions. A minimum freeboard height of 2 feet will be required on all bulk materials transport.	X	X
14. Wind erosion control techniques (such as windbreaks, water, chemical dust suppressants, and/or vegetation) will be used on all construction areas that may be disturbed. Any windbreaks installed to comply with this condition will remain in place until the soil is stabilized or permanently covered with vegetation.	X	X
15. Disturbed areas will be revegetated or covered with gravel or other dust suppressant material, in accordance with the Project Restoration Plan.	X	X
16. The Applicant will work with the construction contractor to utilize to the extent feasible, EPA/CARB Tier II/Tier III engine compliant equipment for equipment over 100 horsepower (hp).	X	X
17. Ensure periodic maintenance and inspections per manufacturer specifications for all construction equipment and vehicles.	X	X
18. Diesel equipment and construction vehicles operating during the construction phase must comply with §2485, Title 13 of the California Code of Regulations, which limits engine idling to five minutes. Newer diesel engines (post 2008) are required to automatically shut down after five minutes of idling.	X	X
19. Use California low sulfur diesel fuels (<=15 parts per million by weight [ppmw] sulfur).	X	X

[1] Applies only where ground disturbance is expected (trenching, replacement poles and interset poles).
[2] COC = Conditions of Certification from the CEC Final License Decision for the Abengoa Mojave Solar Plant Project.
[3] SCE maintains responsibility for implementation of environmental protection measures, design measures, and best management practices for the Lockhart Substation and SPS Project, as described in Chapter 2.0 of the EA, including the CEC Final License Decision COCs, which are applicable to the Lockhart Substation.

Environmental Protection Measures, Design Measures, BMPs, and CEC Conditions	Responsible Party	
	Mojave Solar	SCE [3]
Conditions of Certification From the California Energy Commission's Final Decision		
AQ-SC1 Air Quality Construction Mitigation Manager (AQCMM): The Project owner shall designate and retain an onsite AQCMM who shall be responsible for directing and documenting compliance with Conditions of Certification AQ-SC3, AQ-SC4, and AQ-SC5 for the entire Project site and linear facility construction. The onsite AQCMM may delegate responsibilities to one or more AQCMM Delegates. The AQCMM and AQCMM Delegates shall have full access to all areas of construction on the Project site and linear facilities, and shall have the authority to stop any or all construction activities as warranted by applicable construction mitigation conditions. The AQCMM and AQCMM Delegates may have other responsibilities in addition to those described in this condition. The AQCMM shall not be terminated without written consent of the compliance project manager (CPM).	X-COC	X
Verification: At least 30 days prior to the start of ground disturbance, the Project owner shall submit to the CPM for approval, the name, resume, qualifications, and contact information for the onsite AQCMM and all AQCMM Delegates.		
AQ-SC2 Air Quality Construction Mitigation Plan (AQCMP): The Project owner shall provide an AQCMP, for approval, which details the steps that will be taken and the reporting requirements necessary to ensure compliance with Conditions of Certification AQ-SC3, AQ-SC4, and AQ-SC5.	X-COC	X
Verification: At least 30 days prior to the start of any ground disturbance, the Project owner shall submit the AQCMP to the CPM for approval. The AQCMP shall include effectiveness and environmental data for the proposed soil stabilizer. The CPM will notify the Project owner of any necessary modifications to the plan within 15 days from the date of receipt.		
AQ-SC3 Construction Fugitive Dust Control: The AQCMM shall submit documentation to the CPM in each Monthly Compliance Report that demonstrates compliance with the AQCMP mitigation measures for the purposes of minimizing fugitive dust emission creation from construction activities and preventing all fugitive dust plumes that will not comply with the performance standards identified in AQ-SC4 from leaving the Project site. The following fugitive dust mitigation measures shall be included in the AQCMP required by AQ-SC2, and any deviation from the AQCMP mitigation measures shall require prior CPM notification and approval. a. The main access roads through the facility to the power block areas will be either paved or stabilized	X-COC	X

[1] Applies only where ground disturbance is expected (trenching, replacement poles and interset poles).
[2] COC = Conditions of Certification from the CEC Final License Decision for the Abengoa Mojave Solar Plant Project.
[3] SCE maintains responsibility for implementation of environmental protection measures, design measures, and best management practices for the Lockhart Substation and SPS Project, as described in Chapter 2.0 of the EA, including the CEC Final License Decision COCs, which are applicable to the Lockhart Substation.

Environmental Protection Measures, Design Measures, BMPs, and CEC Conditions	Responsible Party	
	Mojave Solar	SCE [3]
using soil binders, or equivalent methods, to provide a stabilized surface that is similar for the purposes of dust control to paving, that may or may not include a crushed rock (gravel or similar material with fines removed) top layer, prior to initiating construction in the main power block area, and delivery areas for operations materials (chemicals, replacement parts, etc.) will be paved or treated prior to taking initial deliveries. b. All unpaved construction roads and unpaved operation and maintenance site roads, as they are being constructed, shall be stabilized with a nontoxic soil stabilizer or soil weighting agent that can be determined to be both as efficient or more efficient for fugitive dust control as CARB-approved soil stabilizers, and shall not increase any other environmental impacts, including loss of vegetation to areas beyond where the soil stabilizers are being applied for dust control. All other disturbed areas in the Project and linear construction sites shall be watered as frequently as necessary during grading (consistent with BIO-7) and after active construction activities shall be stabilized with a nontoxic soil stabilizer or soil weighting agent, or alternative approved soil stabilizing methods, in order to comply with the dust mitigation objectives of Condition of Certification AQ-SC4. The frequency of watering can be reduced or eliminated during periods of precipitation. c. No vehicle shall exceed 10 mph on unpaved areas within the construction site, with the exception that vehicles may travel up to 25 mph on stabilized unpaved roads as long as such speeds do not create visible dust emissions. d. Visible speed limit signs shall be posted at the construction site entrances. e. All construction equipment vehicle tires shall be inspected and washed as necessary to be cleaned free of dirt prior to entering paved roadways. f. Gravel ramps of at least 20 feet in length must be provided at the tire washing/cleaning station. g. All unpaved exits from the construction site shall be graveled or treated to prevent track-out to public roadways. h. All construction vehicles shall enter the construction site through the treated entrance roadways, unless an alternative route has been submitted to and approved by the CPM. i. Construction areas adjacent to any paved roadway below the grade of the surrounding construction area or otherwise directly impacted by sediment from site drainage shall be provided with sandbags or other equivalently effective measures to prevent runoff to roadways, or other similar runoff control measures as specified in the SWPPP, only when such SWPPP measures are necessary so that this condition does not conflict with the requirements of the SWPPP.		

[1] Applies only where ground disturbance is expected (trenching, replacement poles and interset poles).
[2] COC = Conditions of Certification from the CEC Final License Decision for the Abengoa Mojave Solar Plant Project.
[3] SCE maintains responsibility for implementation of environmental protection measures, design measures, and best management practices for the Lockhart Substation and SPS Project, as described in Chapter 2.0 of the EA, including the CEC Final License Decision COCs, which are applicable to the Lockhart Substation.

Environmental Protection Measures, Design Measures, BMPs, and CEC Conditions	Responsible Party	
	Mojave Solar	SCE [3]
j. All paved roads within the construction site shall be swept daily or as needed (less during periods of precipitation) on days when construction activity occurs to prevent the accumulation of dirt and debris. k. At least the first 500 feet of any paved public roadway exiting the construction site or exiting other unpaved roads en route from the construction site or construction staging areas shall be swept as needed (less during periods of precipitation) on days when construction activity occurs or on any other day when dirt or runoff resulting from the construction site activities is visible on the public paved roadways. l. All soil storage piles and disturbed areas that remain inactive for longer than 10 days shall be covered, or shall be treated with appropriate dust suppressant compounds. m. All vehicles that are used to transport solid bulk material on public roadways and that have potential to cause visible emissions shall be provided with a cover, or the materials shall be sufficiently wetted and loaded onto the trucks in a manner to provide at least 1 foot of freeboard. n. Wind erosion control techniques (such as windbreaks, water, chemical dust suppressants, and/or vegetation) shall be used on all construction areas that may be disturbed. Any windbreaks installed to comply with this condition shall remain in place until the soil is stabilized or permanently covered with vegetation.		
Verification: The AQCMM shall provide the CPM a Monthly Compliance Report to include the following to demonstrate control of fugitive dust emissions: A. A summary of all actions taken to maintain compliance with this condition; B. Copies of any complaints filed with the District in relation to Project construction; and C. Any other documentation deemed necessary by the CPM or AQCMM to verify compliance with this condition. Such information may be provided via electronic format or disk at the Project owner's discretion.		
AQ-SC4 Dust Plume Response Requirement: The AQCMM or an AQCMM Delegate shall monitor all construction activities for visible dust plumes. Observations of visible dust plumes that have the potential to be transported (A) off the Project site and within 400 feet upwind of any regularly occupied structures not owned by the Project owner or (B) 200 feet beyond the centerline of the construction of linear facilities indicate that existing mitigation measures are not resulting in effective mitigation. The AQCMP shall include a section detailing how the additional mitigation measures will be accomplished within the time limits specified. The	X-COC	X

[1] Applies only where ground disturbance is expected (trenching, replacement poles and interset poles).
[2] COC = Conditions of Certification from the CEC Final License Decision for the Abengoa Mojave Solar Plant Project.
[3] SCE maintains responsibility for implementation of environmental protection measures, design measures, and best management practices for the Lockhart Substation and SPS Project, as described in Chapter 2.0 of the EA, including the CEC Final License Decision COCs, which are applicable to the Lockhart Substation.

Environmental Protection Measures, Design Measures, BMPs, and CEC Conditions	Responsible Party	
	Mojave Solar	SCE [3]
AQCMM or Delegate shall implement the following procedures for additional mitigation measures in the event that such visible dust plumes are observed: Step 1: The AQCMM or Delegate shall direct more intensive application of the existing mitigation methods within 15 minutes of making such a determination. Step 2: The AQCMM or Delegate shall direct implementation of additional methods of dust suppression if Step 1, specified above, fails to result in adequate mitigation within 30 minutes of the original determination. Step 3: The AQCMM or Delegate shall direct a temporary shutdown of the activity causing the emissions if Step 2, specified above, fails to result in effective mitigation within 1 hour of the original determination. The activity shall not restart until the AQCMM or Delegate is satisfied that appropriate additional mitigation or other site conditions have changed so that visual dust plumes will not result upon restarting the shutdown source. The Project owner may appeal to the CPM any directive from the AQCMM or Delegate to shut down an activity, if the shutdown shall go into effect within 1 hour of the original determination, unless overruled by the CPM before that time. **Verification:** The AQCMM shall provide the CPM a Monthly Compliance Report to include: A. A summary of all actions taken to maintain compliance with this condition; B. Copies of any complaints filed with the District in relation to Project construction; and C. Any other documentation deemed necessary by the CPM or AQCMM to verify compliance with this condition. Such information may be provided via electronic format or disk at the Project owner's discretion.		
AQ-SC5 Diesel-Fueled Engine Control: The AQCMM shall submit to the CPM, in the Monthly Compliance Report, a construction mitigation report that demonstrates compliance with the AQCMP mitigation measures for purposes of controlling diesel construction-related emissions. The following off-road diesel construction equipment mitigation measures shall be included in the AQCMP required by AQ-SC2, and any deviation from the AQCMP mitigation measures shall require prior and CPM notification and approval. a. All diesel-fueled engines used in the construction of the facility shall have clearly visible tags issued by the onsite AQCMM showing that the engine meets the conditions set forth herein. b. All construction diesel engines with a rating of 50 hp or higher and lower than 750 hp shall meet, at a minimum, the Tier 3 California Emission Standards for Off-Road Compression-Ignition Engines, as specified in California Code of Regulations, Title 13, section 2423(b)(1), unless a good faith effort to the satisfaction of the CPM that is certified by the onsite AQCMM demonstrates that such engine is	X-COC	X

[1] Applies only where ground disturbance is expected (trenching, replacement poles and interset poles).
[2] COC = Conditions of Certification from the CEC Final License Decision for the Abengoa Mojave Solar Plant Project.
[3] SCE maintains responsibility for implementation of environmental protection measures, design measures, and best management practices for the Lockhart Substation and SPS Project, as described in Chapter 2.0 of the EA, including the CEC Final License Decision COCs, which are applicable to the Lockhart Substation.

Environmental Protection Measures, Design Measures, BMPs, and CEC Conditions	Responsible Party	
	Mojave Solar	SCE [3]
not available for a particular item of equipment. Engines larger than 750 hp shall meet Tier 2 engine standards. In the event that a Tier 3 engine is not available for any off-road equipment larger than 50100 hp and smaller than 750 hp, that equipment shall be equipped with a Tier 2 engine, or an engine that is equipped with retrofit controls to reduce exhaust emissions of nitrogen oxides (NO_X) and diesel particulate matter (DPM) to no more than Tier 2 levels unless certified by engine manufacturers or the onsite AQCMM that the use of such devices is not practical for specific engine types. For purposes of this condition, the use of such devices is "not practical" for the following, as well as other, reasons. 1. There is no available retrofit control device that has been verified by either the California Air Resources Board or U.S. Environmental Protection Agency to control the engine in question to Tier 2 equivalent emission levels and the highest level of available control using retrofit or Tier 1 engines is being used for the engine in question; or 2. The construction equipment is intended to be on-site for 10 days or less. 3. The CPM may grant relief from this requirement if the AQCMM can demonstrate a good faith effort to comply with this requirement and that compliance is not practical. c. The use of a retrofit control device may be terminated immediately, provided that the CPM is informed within 10 working days of the termination and that a replacement for the equipment item in 1. The use of the retrofit control device is excessively reducing the normal availability of the construction equipment due to increased down time for maintenance, and/or reduced power output due to an excessive increase in back pressure. 2. The retrofit control device is causing or is reasonably expected to cause engine damage. 3. The retrofit control device is causing or is reasonably expected to cause a substantial risk to workers or the public. 4. Any other seriously detrimental cause that has the approval of the CPM prior to implementation of the termination. d. All heavy earth-moving equipment and heavy duty construction-related trucks with engines meeting the requirements of (b) above shall be properly maintained and the engines tuned to the engine manufacturer's specifications. e. All diesel heavy construction equipment shall not idle for more than 5 minutes. Vehicles that need to idle as part of their normal operation (such as concrete trucks) are exempted from this requirement. f. Construction equipment will employ electric motors when feasible.		

[1] Applies only where ground disturbance is expected (trenching, replacement poles and interset poles).
[2] COC = Conditions of Certification from the CEC Final License Decision for the Abengoa Mojave Solar Plant Project.
[3] SCE maintains responsibility for implementation of environmental protection measures, design measures, and best management practices for the Lockhart Substation and SPS Project, as described in Chapter 2.0 of the EA, including the CEC Final License Decision COCs, which are applicable to the Lockhart Substation.

Environmental Protection Measures, Design Measures, BMPs, and CEC Conditions	Responsible Party	
	Mojave Solar	SCE [3]
Verification: The AQCMM shall include in the Monthly Compliance Report the following to demonstrate control of diesel construction-related emissions: A. A summary of all actions taken to control diesel construction related emissions; B. A list of all heavy equipment used onsite during that month, including the owner of that equipment and a letter from each owner indicating that equipment has been properly maintained; and C. Any other documentation deemed necessary by the CPM or AQCMM to verify compliance with this condition. Such information may be provided via electronic format or disk at the Project owner's discretion.		
AQ-SC6 The Project owner, when obtaining dedicated on-road or off-road vehicles for mirror washing activities and other facility maintenance activities, shall only obtain vehicles that meet California on-road vehicle emission standards or appropriate EPA/California off-road engine emission standards for the latest model year available when obtained.	X-COC	X
Verification: At least 30 days prior to the start commercial operation, the Project owner shall submit to the CPM a copy of the plan that identifies the size and type of the onsite vehicle and equipment fleet and the vehicle and equipment purchase orders and contracts and/or purchase schedule. The plan shall be updated every other year and submitted in the Annual Compliance Report.		
AQ-SC7 The Project owner shall provide a site Operations Dust Control Plan, including all applicable fugitive dust control measures identified in the verification of AQ-SC3 that will be applicable to minimizing fugitive dust emission creation from operation and maintenance activities and preventing all fugitive dust plumes that will not comply with the performance standards identified in AQ-SC4 from leaving the Project site; that:	X-COC	X
A. Describes the active operations and wind erosion control techniques such as windbreaks and chemical dust suppressants, including their ongoing maintenance procedures, that shall be used on areas that could be disturbed by vehicles or wind anywhere within the Project boundaries; and B. Identifies the location of signs throughout the facility that will limit traveling on unpaved portion of roadways to solar equipment maintenance vehicles only. In addition, vehicle speed shall be limited to no more than 10 mph on these unpaved roadways, with the exception that vehicles may travel up to 25 mph on stabilized unpaved roads as long as such speeds do not create visible dust emissions. The site operations fugitive dust control plan shall include the use of durable nontoxic soil stabilizers		

[1] Applies only where ground disturbance is expected (trenching, replacement poles and interset poles).
[2] COC = Conditions of Certification from the CEC Final License Decision for the Abengoa Mojave Solar Plant Project.
[3] SCE maintains responsibility for implementation of environmental protection measures, design measures, and best management practices for the Lockhart Substation and SPS Project, as described in Chapter 2.0 of the EA, including the CEC Final License Decision COCs, which are applicable to the Lockhart Substation.

Environmental Protection Measures, Design Measures, BMPs, and CEC Conditions	Responsible Party	
	Mojave Solar	SCE [3]
on all regularly used unpaved roads and disturbed off-road areas, or alternative methods for stabilizing disturbed off-road areas, within the Project boundaries, and shall include the inspection and maintenance procedures that will be undertaken to ensure that the unpaved roads remain stabilized. The soil stabilizer used shall be a nontoxic soil stabilizer or soil weighting agent that can be determined to be as efficient as or more efficient for fugitive dust control than CARB-approved soil stabilizers, and that shall not increase any other environmental impacts, including loss of vegetation to areas beyond where the soil stabilizers are being applied for dust control. The performance and application of the fugitive dust controls shall also be measured against and meet the performance requirements of condition AQ-SC4. The measures and performance requirements of AQ-SC4 shall also be included in the Operations Dust Control Plan.		
Verification: At least 30 days prior to start of commercial operation, the Project owner shall submit to the CPM for review and approval a copy of the site Operations Dust Control Plan that identifies the dust and erosion control procedures, including effectiveness and environmental data for the proposed soil stabilizer that will be used during operation of the Project and that identifies all locations of the speed limit signs. Within 60 days after commercial operation, the Project owner shall provide to the CPM a report identifying the locations of all speed limit signs, and a copy of the Project employee and contractor training manual that clearly identifies that Project employees and contractors are required to comply with the dust and erosion control procedures and onsite speed limits.		
AQ-SC8 The Project owner shall provide the CPM copies of all District-issued Authority to Construct (ATC) and Permit to Operate (PTO) documents for the facility. The Project owner shall submit to the CPM for review and approval any modification proposed by the Project owner to any Project Federal air permit. The Project owner shall submit to the CPM any modification to any Federal air permit proposed by the District or EPA, and any revised Federal air permit issued by the District or EPA, for the Project.	X-COC	X
Verification: The Project owner shall submit any ATC, PTO, and proposed Federal air permit modifications to the CPM within 5 working days of its submittal either by (1) the Project owner to an agency, or (2) receipt of proposed modifications from an agency. The Project owner shall submit all modified ATC/PTO documents and all Federal air permits to the CPM within 15 days of receipt.		
AQ-SC9 The Project owner shall offer to pay for temporary equivalent lodging to all residents that are located within	X-COC	X

[1] Applies only where ground disturbance is expected (trenching, replacement poles and interset poles).
[2] COC = Conditions of Certification from the CEC Final License Decision for the Abengoa Mojave Solar Plant Project.
[3] SCE maintains responsibility for implementation of environmental protection measures, design measures, and best management practices for the Lockhart Substation and SPS Project, as described in Chapter 2.0 of the EA, including the CEC Final License Decision COCs, which are applicable to the Lockhart Substation.

Environmental Protection Measures, Design Measures, BMPs, and CEC Conditions	Responsible Party	
	Mojave Solar	SCE [3]
0.25 mile of the Project site fence line during the initial grading/site preparation phase of construction, for those periods of time when the initial grading/site preparation earth-moving activities may occur within 0.25 mile of these residential properties. The Project owner shall contact and provide this offer of temporary lodging to all residents affected by this condition at least 1 month prior to the start of initial grading.		
Verification: The Project owner shall provide to the CPM, prior to the start of initial grading, a statement signed by the Project owner's project manager stating that the owner or residents of the properties affected by this condition have been notified and that the residents have been offered by the Project owner paid relocation during the affected period of the initial grading/site preparation phase of construction. The statement shall list affected property owners/residents notified and the means of notification. Additionally, in the Monthly Compliance Report the Project owner shall provide documentation regarding any requests from the residents to be relocated for longer periods during construction and the Project owner's actions to evaluate those requests.		
Equipment: Two 21.5 MMBtu/hr natural gas fired auxiliary boilers with low-NO_X burner systems.		
AQ-1 Operation of this equipment shall be conducted in compliance with all data and specifications submitted with the application under which this permit is issued unless otherwise noted below.	X-COC	
Verification: The project owner shall make the site available for inspection of records by representatives of the District, ARB, and the Energy Commission.		
AQ-2 This equipment shall be exclusively fueled with pipeline quality natural gas and shall be operated and maintained in strict accord with the recommendations of its manufacturer or supplier and/or sound engineering principles.	X-COC	
Verification: The project owner shall make the site available for inspection of records by representatives of the District, ARB, and the Energy Commission.		
AQ-3 Emissions from this equipment shall not exceed the following hourly emission limits, verified by fuel use and an initial or annual compliance tests as applicable for each pollutant: a. NO_X as NO_2: 0.237 lb/hr operating at 100% load (based on 9.0 ppmvd corrected to 3% O_2 and averaged over one hour) b. CO: 0.817 lb/hr operating at 100% load (based on 50 ppmvd corrected to 3% O_2 and averaged over one hour) c. VOC as CH_4: 0.231 lb/hr operating at 100% load d. SO_X as SO_2: 0.0126 lb/hr operating at 100% load	X-COC	

[1] Applies only where ground disturbance is expected (trenching, replacement poles and interset poles).
[2] COC = Conditions of Certification from the CEC Final License Decision for the Abengoa Mojave Solar Plant Project.
[3] SCE maintains responsibility for implementation of environmental protection measures, design measures, and best management practices for the Lockhart Substation and SPS Project, as described in Chapter 2.0 of the EA, including the CEC Final License Decision COCs, which are applicable to the Lockhart Substation.

Environmental Protection Measures, Design Measures, BMPs, and CEC Conditions	Responsible Party	
	Mojave Solar	SCE [3]
e. $PM_{10/2.5}$: 0.159 lb/hr operating at 100% load		
Verification: As part of the Annual Compliance Report, the project owner shall include information demonstrating compliance with boiler operating emission rates.		
AQ-4 Prior to the expiration date each year, after the completion of construction the project owner shall have this equipment tuned, as specified by Rule 1157(I), Tuning Procedure.	X-COC	
Verification: The project owner shall make the site available for inspection of records by representatives of the District, ARB, and the Energy Commission.		
AQ-5 The project owner shall maintain an operations log for this equipment on-site and current for a minimum of five (5) years, and said log shall be provided to District personnel on request. The operations log shall include the following information at a minimum: a. Cumulative annual fuel use in cubic feet or operation in hours; b. Annual tune-up verification; c. Results of annual compliance testing; d. Any permanent changes made to the equipment that would affect air pollutant emissions, and indicate when changes were made.	X-COC	
Verification: The project owner shall make the site available for inspection of records and equipment by representatives of the District, ARB, and the Energy Commission.		
AQ-6 The project owner shall perform initial compliance tests on this equipment in accordance with the MDAQMD Compliance Test Procedural Manual. The test report shall be submitted to the District within 180 days of initial start up: a. NO_X as NO_2 in ppmvd at 3% oxygen and lb/hr (measured per USEPA Reference Methods 19 and 20). b. VOC as CH_4 in ppmvd at 3% oxygen and lb/hr (measured per USEPA Reference Methods 25A and 18). c. CO in ppmvd at 3% oxygen and lb/hr (measured per USEPA Reference Method 10). d. $PM_{10/2.5}$ in mg/m^3 at 3% oxygen and lb/hr (measured per USEPA Reference Methods 5 and 202 or CARB Method 5). e. Flue gas flow rate in dscf per minute. f. Opacity (measured per USEPA reference Method 9).	X-COC	
Verification: The project owner shall notify the District and the CPM within fifteen (15) working days before the execution of the compliance test required in this condition. The test results shall be submitted to the		

[1] Applies only where ground disturbance is expected (trenching, replacement poles and interset poles).
[2] COC = Conditions of Certification from the CEC Final License Decision for the Abengoa Mojave Solar Plant Project.
[3] SCE maintains responsibility for implementation of environmental protection measures, design measures, and best management practices for the Lockhart Substation and SPS Project, as described in Chapter 2.0 of the EA, including the CEC Final License Decision COCs, which are applicable to the Lockhart Substation.

Environmental Protection Measures, Design Measures, BMPs, and CEC Conditions	Responsible Party	
	Mojave Solar	SCE [3]
District and to the CPM within 180 days of initial start up.		
AQ-7 The project owner shall perform annual compliance tests on this equipment in accordance with the MDAQMD Compliance Test Procedural Manual. The test report shall be submitted to the District no later than six weeks prior to the expiration date of this permit. The following compliance tests are required: a. NO_X as NO_2 in ppmvd at 3% oxygen and lb/hr (measured per USEPA Reference Methods 19 and 20). b. CO in ppmvd at 3% oxygen and lb/hr (measured per USEPA Reference Method 10).	X-COC	
Verification: The project owner shall notify the District and the CPM within fifteen (15) working days before the execution of the compliance test required in this condition. The test results shall be submitted to the District and to the CPM within the timeframe required by this condition.		
AQ-8 Annual fuel usage shall not exceed 45.9 MMscf verified by annual fuel usage records.	X-COC	
Verification: As part of the Annual Compliance Report, the project owner shall include information demonstrating compliance with boiler annual fuel use limit.		
Application No. 00010906 and 00010907 (Two - HTF Ullage Expansion Tank) **Equipment:** Two HTF ullage/expansion tanks.		
AQ-9 Operation of this equipment shall be conducted in compliance with all data and specifications submitted with the application under which this permit is issued unless otherwise noted below.	X-COC	
Verification: The project owner shall make the site available for inspection of records by representatives of the District, ARB, and the Energy Commission.		
AQ-10 This system shall store only HTF, specifically the condensable fraction of the vapors vented from the ullage system.	X-COC	
Verification: The project owner shall make the site available for inspection of records by representatives of the District, ARB, and the Energy Commission.		
AQ-11 The expansion tanks (5), nitrogen-condensing tank and two vertical HTF storage tanks shall be operated at all times under a nitrogen blanket.	X-COC	
Verification: The project owner shall make the site available for inspection of records by representatives of the District, ARB, and the Energy Commission.		
AQ-12 The ullage/expansion system nitrogen venting shall be carried out only through vents which have vapor condensing coolers which shall be maintained at or below 120 degrees Fahrenheit.	X-COC	
Verification: The project owner shall provide the District and CPM manufacturer design specifications showing compliance with this condition at least 30 days prior to the installation of the ullage/expansion vent		

[1] Applies only where ground disturbance is expected (trenching, replacement poles and interset poles).
[2] COC = Conditions of Certification from the CEC Final License Decision for the Abengoa Mojave Solar Plant Project.
[3] SCE maintains responsibility for implementation of environmental protection measures, design measures, and best management practices for the Lockhart Substation and SPS Project, as described in Chapter 2.0 of the EA, including the CEC Final License Decision COCs, which are applicable to the Lockhart Substation.

Environmental Protection Measures, Design Measures, BMPs, and CEC Conditions	Responsible Party	
	Mojave Solar	SCE [3]
system. The project owner shall have active temperature gauges that can be inspected to show compliance with this condition.		
AQ-13 The HTF storage tank shall have in place a properly operating liquid HTF air cooler which shall maintain the tank at or below 165 degrees Fahrenheit.	X-COC	
Verification: The project owner shall provide the District and CPM manufacturer design specifications showing compliance with this condition at least 30 days prior to the installation of the HTF storage tanks. The project owner shall have active temperature gauges that can be inspected to show ongoing compliance with this condition.		
AQ-14 The nitrogen condensing tanks shall be maintained at or below 176 degrees Fahrenheit.	X-COC	
Verification: The project owner shall provide the District and CPM manufacturer design specifications showing compliance with this condition at least 30 days prior to the installation of the nitrogen condensing tanks. The project owner shall have active temperature gauges that can be inspected to show ongoing compliance with this condition.		
AQ-15 Vent release and HTF storage tank temperatures shall be monitored in accordance with a District approved Inspection, Monitoring and Maintenance plan.	X-COC	
Verification: The project owner shall provide the District for review and approval and the CPM for review the required Inspection, Monitoring and Maintenance plan at least 30 days prior to the installation of the HTF storage tanks and vent systems.		
AQ-16 The project owner shall establish an inspection and maintenance program to determine, repair, and log leaks in HTF piping network, storage tanks, distillation units and expansion tanks. Inspection and maintenance program and documentation shall be available to District staff upon request. a. All pumps, compressors and pressure relief devices (pressure relief valves or rupture disks) shall be electronically, audio, or visually inspected once every operating day. b. All accessible valves, fittings, pressure relief devices (PRDs), hatches, pumps, compressors, etc. shall be inspected quarterly using a leak detection device such as a Foxboro OVA 108 calibrated for methane. c. VOC leaks greater than 100-ppmv shall be tagged (with date and concentration) and repaired within seven calendar days of detection. d. VOC leaks greater than 10,000-ppmv shall be tagged and repaired within 24-hours of detection. e. The project owner shall maintain a log of all VOC leaks exceeding 10,000- ppmv, including location,	X-COC	

[1] Applies only where ground disturbance is expected (trenching, replacement poles and interset poles).
[2] COC = Conditions of Certification from the CEC Final License Decision for the Abengoa Mojave Solar Plant Project.
[3] SCE maintains responsibility for implementation of environmental protection measures, design measures, and best management practices for the Lockhart Substation and SPS Project, as described in Chapter 2.0 of the EA, including the CEC Final License Decision COCs, which are applicable to the Lockhart Substation.

Environmental Protection Measures, Design Measures, BMPs, and CEC Conditions	Responsible Party	
	Mojave Solar	SCE [3]
component type, and repair made. f. The project owner shall maintain record of the amount of HTF replaced on a monthly basis for a period of five (5) years. g. The project owner shall maintain record of the amount of HTF degradation products removed from system on a monthly basis for a period of five (5) years. h. Any detected leak exceeding 100-ppmv and not repaired in 7-days and 10,000-ppmv not repaired within 24-hours shall constitute a violation of this Authority to Construct ATC)/Permit to Operate (PTO). i. The project owner shall place an adequate number of isolation valves in the Heat transfer Fluid (HTF) pipe loops so as to be able to isolate a solar panel collector loop in the event of a leak of fluid. These valves shall be actuated automatically, manually, and remotely, or locally as determined during detailed engineering design. The detailed engineering design drawings showing the number, location, and type of isolation valves shall be provided to the District for review and approval prior to the commencement of the solar array construction.		
Verification: The inspection and maintenance plan shall be submitted to the CPM for review and approval at least 30 days before taking delivery of the HTF. As part of the Annual Compliance Report, the project owner shall provide the quantity of used HTF fluid removed from the system and the amount of new HTF fluid added to the system each year. The project owner shall make the site available for inspection of HTF piping Inspection and Maintenance Program records and HTF system equipment by representatives of the District, ARB, and the Energy Commission.		
AQ-17 The project owner shall submit to the District a compliance test protocol within sixty (60) days of start-up and shall conduct all required compliance/certification tests in accordance with a District-approved test plan. Thirty (30) days prior to the compliance/certification tests the project owner shall provide a written test plan for District review and approval. Written notice of the compliance/certification test shall be provided to the District ten (10) days prior to the tests so that an observer may be present. A written report with the results of such compliance/certification tests shall be submitted to the District within forty-five (45) days after testing.	X-COC	
Verification: The project owner shall provide a compliance test protocol to the District for approval and CPM for review at least no later than sixty (60) days after startup and submit a test plan to the District for approval and CPM for review at least thirty (30) days prior to the compliance tests. The project owner shall notify the		

[1] Applies only where ground disturbance is expected (trenching, replacement poles and interset poles).
[2] COC = Conditions of Certification from the CEC Final License Decision for the Abengoa Mojave Solar Plant Project.
[3] SCE maintains responsibility for implementation of environmental protection measures, design measures, and best management practices for the Lockhart Substation and SPS Project, as described in Chapter 2.0 of the EA, including the CEC Final License Decision COCs, which are applicable to the Lockhart Substation.

Environmental Protection Measures, Design Measures, BMPs, and CEC Conditions	Responsible Party	
	Mojave Solar	SCE [3]
District and the CPM within ten (10) working days before the execution of the compliance tests required in AQ-18 and AQ-19, and the test results shall be submitted to the District and to the CPM within forty-five (45) days after the tests are conducted.		
AQ-18 The project owner shall perform the following initial compliance tests on this equipment in accordance with the MDAQMD Compliance Test Procedural Manual. The test report shall be submitted to the District within 180 days of initial start up. The following compliance tests are required: a. VOC as CH_4 in ppmvd and lb/hr (measured per USEPA Reference Methods 25A and 18 or equivalent). b. Benzene in ppmvd at and lb/hr (measured per CARB method 410 or equivalent).	X-COC	
Verification: The project owner shall submit the test results to the District and to the CPM within 180 days after initial start up.		
AQ-19 The project owner shall perform the following annual compliance tests on this equipment in accordance with the MDAQMD Compliance Test Procedural Manual. The test report shall be submitted to the District no later than six weeks prior to the expiration date of this permit. The following compliance tests are required: a. VOC as CH_4 in ppmvd and lb/hr (measured per USEPA Reference Methods 25A and 18 or equivalent). b. Benzene in ppmvd and lb/hr (measured per CARB method 410 or equivalent). Additionally, records of all compliance tests shall be maintained on site for a period of five (5) years and presented to District personnel upon request.	X-COC	
Verification: As part of the Annual Compliance Report, the project owner shall include the test results demonstrating compliance with this condition and the project owner shall make the site available for inspection of records by representatives of the District, ARB, and the Energy Commission.		
AQ-20 Emissions from this equipment may not exceed the following emission limits, based on a calendar day summary: a. VOC as CH_4 – 4.55 lb/day, verified by compliance test. b. Benzene – 1.9 lb/day, verified by compliance test.	X-COC	
Verification: As part of the Annual Compliance Report, the project owner shall include the test results demonstrating compliance with this condition and the project owner shall make the site available for inspection of records by representatives of the District, ARB, and the Energy Commission.		

[1] Applies only where ground disturbance is expected (trenching, replacement poles and interset poles).
[2] COC = Conditions of Certification from the CEC Final License Decision for the Abengoa Mojave Solar Plant Project.
[3] SCE maintains responsibility for implementation of environmental protection measures, design measures, and best management practices for the Lockhart Substation and SPS Project, as described in Chapter 2.0 of the EA, including the CEC Final License Decision COCs, which are applicable to the Lockhart Substation.

Environmental Protection Measures, Design Measures, BMPs, and CEC Conditions	Responsible Party	
	Mojave Solar	SCE [3]
AQ-21 If current non-criteria substances become regulated as toxic or hazardous substances and are used in this equipment, the project owner shall submit to the District a plan demonstrating how compliance will be achieved and maintained with such regulations.	X-COC	
Verification: The project owner shall submit a compliance plan of the toxic or hazardous substances for District approval and CPM review if current non-criteria substances in the HTF become regulated as toxic or hazardous substances.		
Equipment: Two 6-cell cooling towers with drift eliminator rate of 0.0005% and water circulation rate of 90,000 gpm.		
AQ-22 Operation of this equipment shall be conducted in compliance with all data and specifications submitted with the application under which this permit is issued unless otherwise noted below.	X-COC	
Verification: The project owner shall make the site available for inspection of records and equipment by representatives of the District, ARB, and the Energy Commission.		
AQ-23 This equipment shall be operated and maintained in strict accord with the recommendations of its manufacturer or supplier and/or sound engineering principles.	X-COC	
Verification: The project owner shall make the site available for inspection of records and equipment by representatives of the District, ARB, and the Energy Commission.		
AQ-24 The drift rate shall not exceed 0.0005 percent with a maximum circulation rate of 90,000 gallons per minute. The maximum hourly PM_{10} emission rate shall not exceed 2.24 pounds per hour, as calculated per the written District approved protocol.	X-COC	
Verification: The manufacturer guarantee data for the drift eliminator, showing compliance with this condition, shall be provided to the CPM and the District 30 days prior to cooling tower operation. As part of the Annual Compliance Report the project owner shall include information on operating emission rates to demonstrate compliance with this condition.		
AQ-25 The project owner shall perform weekly specific conductivity tests of the blowdown water to indirectly measure total dissolved solids (TDS). Quarterly tests of the blow-down water will be done to confirm the relationship between conductance and TDS. The TDS shall not exceed 10,000 ppm on a calendar monthly basis.	X-COC	
Verification: The cooling tower recirculation water TDS content test results shall be provided to representatives of the District, ARB, and the Energy Commission upon request.		

[1] Applies only where ground disturbance is expected (trenching, replacement poles and interset poles).
[2] COC = Conditions of Certification from the CEC Final License Decision for the Abengoa Mojave Solar Plant Project.
[3] SCE maintains responsibility for implementation of environmental protection measures, design measures, and best management practices for the Lockhart Substation and SPS Project, as described in Chapter 2.0 of the EA, including the CEC Final License Decision COCs, which are applicable to the Lockhart Substation.

Environmental Protection Measures, Design Measures, BMPs, and CEC Conditions	Responsible Party	
	Mojave Solar	SCE [3]
AQ-26 The project owner shall conduct all required cooling tower water tests in accordance with a District-approved test and emissions calculation protocol. Thirty (30) days prior to the first such test the project owner shall provide a written test and emissions calculation protocol for District review and approval.	X-COC	
Verification: The project owner shall provide an emissions calculation and water sample testing protocol to the District for approval and CPM for review at least 30 days prior to the first cooling tower water test.		
AQ-27 This equipment shall not be operated for more than 5,840 hours per rolling twelve month period.	X-COC	
Verification: The project owner shall submit to the CPM the cooling tower operating data demonstrating compliance with this condition as part of the Annual Operation Report.		
AQ-28 The project owner shall maintain an operations log for this equipment on-site and current for a minimum of five (5) years, and said log shall be provided to District personnel on request. The operations log shall include the following information at a minimum: a. Total operation time (hours per day, hours per month, and hours per rolling twelve month period); and b. The date and result of each blow-down water test in TDS ppm, and the resulting mass emission rate.	X-COC	
Verification: The project owner shall make the site available for inspection of records and equipment by representatives of the District, ARB, and the Energy Commission.		
AQ-29 A maintenance procedure shall be established that states how often and what procedures will be used to ensure the integrity of the drift eliminators. This procedure is to be kept onsite and available to District personnel on request.	X-COC	
Verification: The project owner shall make available at request the written drift eliminator maintenance procedures for inspection by representatives of the District, ARB, and the Energy Commission.		
Equipment: Two - Tier II 4,190 HP diesel fueled emergency generator engines, each driving a generator.		
AQ-30 This equipment shall be installed, operated and maintained in strict accord with those recommendations of the manufacturer/supplier and/or sound engineering principles which produce the minimum emissions of contaminants. Unless otherwise noted, this equipment shall also be operated in accordance with all data and specifications submitted with the application for this permit.	X-COC	
Verification: The project owner shall make the site available for inspection of equipment and records by representatives of the District, ARB, and the Energy Commission		
AQ-31 This unit shall only be fired on ultra-low sulfur diesel fuel, whose sulfur concentration is less than or equal to 0.0015% (15 ppm) on a weight per weight basis per CARB Diesel or equivalent requirements.	X-COC	

[1] Applies only where ground disturbance is expected (trenching, replacement poles and interset poles).
[2] COC = Conditions of Certification from the CEC Final License Decision for the Abengoa Mojave Solar Plant Project.
[3] SCE maintains responsibility for implementation of environmental protection measures, design measures, and best management practices for the Lockhart Substation and SPS Project, as described in Chapter 2.0 of the EA, including the CEC Final License Decision COCs, which are applicable to the Lockhart Substation.

Environmental Protection Measures, Design Measures, BMPs, and CEC Conditions	Responsible Party	
	Mojave Solar	SCE [3]
Verification: The project owner shall make the site available for inspection of equipment and fuel purchase records by representatives of the District, ARB, and the Energy Commission.		
AQ-32 A non-resettable hour meter with a minimum display capability of 9,999 hours shall be installed and maintained on this unit to indicate elapsed engine operating time. (Title 17 CCR §93115.10(e)(1)).	X-COC	
Verification: At least thirty (30) days prior to the installation of the engine, the project owner shall provide the District and the CPM the specification of the hour meter.		
AQ-33 This unit shall be limited to use for emergency power, defined as in response to a fire or when utility back-feed power is not available. In addition, this unit shall be operated no more than 0.5 hours per day and 50 hours per year for testing and maintenance, excluding compliance source testing. Time required for source testing will not be counted toward the 50 hour per year limit.	X-COC	
Verification: The project owner shall make the site available for inspection of records and equipment by representatives of the District, ARB, and the Energy Commission.		
AQ-34 The project owner shall maintain a operations log for this unit current and onsite, either at the engine location or at a on-site location, for a minimum of two (2) years, and for another year where it can be made available to the District staff within five (5) working days from the District's request, and this log shall be provided to District, State and Federal personnel upon request. The log shall include, at a minimum, the information specified below: a. Date of each use and duration of each use (in hours); b. Reason for use (testing & maintenance, emergency, required emission testing); c. Calendar year operation in terms of fuel consumption (in gallons) and total hours; and, d. Fuel sulfur concentration (the project owner may use the supplier's certification of sulfur content if it is maintained as part of this log).	X-COC	
Verification: The project owner shall submit records required by this condition that demonstrating compliance with the sulfur content and engine use limitations of conditions AQ-28 and AQ-30 in the Annual Compliance Report, including a photograph showing the annual reading of engine hours. The project owner shall make the site available for inspection of records by representatives of the District, ARB, and the Energy Commission.		
AQ-35 This unit shall not be used to provide power to the interconnecting utility and shall be isolated from the interconnecting utility when operating.	X-COC	

[1] Applies only where ground disturbance is expected (trenching, replacement poles and interset poles).
[2] COC = Conditions of Certification from the CEC Final License Decision for the Abengoa Mojave Solar Plant Project.
[3] SCE maintains responsibility for implementation of environmental protection measures, design measures, and best management practices for the Lockhart Substation and SPS Project, as described in Chapter 2.0 of the EA, including the CEC Final License Decision COCs, which are applicable to the Lockhart Substation.

Environmental Protection Measures, Design Measures, BMPs, and CEC Conditions	Responsible Party	
	Mojave Solar	SCE [3]
Verification: The project owner shall make the site available for inspection of records and equipment by representatives of the District, ARB, and the Energy Commission.		
AQ-36 This engine may operate in response to notification of impending loss of utility back-feed power if the interconnected utility has ordered an outage to the plant or expects to order such outages at a particular time, the engine is operated no more than 30 minutes prior to the forecasted outage, and the engine is shut down immediately after the utility advises that the outage is no longer imminent or in effect.	X-COC	
Verification: The project owner shall make the site available for inspection of records and equipment by representatives of the District, ARB, and the Energy Commission.		
AQ-37 No two permitted stationary emergency engines (emergency generators or emergency fire pump engines) shall be readiness tested on the same calendar day.	X-COC	
Verification: The project owner shall make the site available for inspection of records and equipment by representatives of the District, ARB, and the Energy Commission.		
AQ-38 This engine shall exhaust through a stack at a minimum height of 60 feet.	X-COC	
Verification: The project owner shall make the site available for inspection of equipment by representatives of the District, ARB, and the Energy Commission.		
AQ-39 This unit is subject to the requirements of the Airborne Toxic Control Measure (ATCM) for Stationary Compression Ignition Engines (Title 17 CCR 93115). In the event of conflict between these conditions and the ATCM, the more stringent shall govern.	X-COC	
Verification: Not necessary.		
AQ-40 This unit is subject to the requirements of the Federal National Source Performance Standards (NSPS) for Stationary Compression Ignition Internal Combustion Engines (40 CFR Part 60 Subpart IIII).	X-COC	
Verification: The project owner shall submit the engine specifications at least 30 days prior to purchasing the engines for review and approval demonstrating that the engines meet NSPS and ARB ATCM emission limit requirements at the time of engine purchase.		
Equipment: Two - Tier III 346 HP diesel fueled emergency generator engines, each driving a fire suppression water pump.		
AQ-41 This equipment shall be installed, operated and maintained in strict accord with those recommendations of the manufacturer/supplier and/or sound engineering principles which produce the minimum emissions of contaminants. Unless otherwise noted, this equipment shall also be operated in accordance with all data and specifications submitted with the application for this permit.	X-COC	

[1] Applies only where ground disturbance is expected (trenching, replacement poles and interset poles).
[2] COC = Conditions of Certification from the CEC Final License Decision for the Abengoa Mojave Solar Plant Project.
[3] SCE maintains responsibility for implementation of environmental protection measures, design measures, and best management practices for the Lockhart Substation and SPS Project, as described in Chapter 2.0 of the EA, including the CEC Final License Decision COCs, which are applicable to the Lockhart Substation.

Environmental Protection Measures, Design Measures, BMPs, and CEC Conditions	Responsible Party	
	Mojave Solar	SCE [3]
Verification: The project owner shall make the site available for inspection of equipment and records by representatives of the District, ARB, and the Energy Commission		
AQ-42 This unit shall only be fired on ultra-low sulfur diesel fuel, whose sulfur concentration is less than or equal to 0.0015% (15 ppm) on a weight per weight basis per CARB Diesel or equivalent requirements.	X-COC	
Verification: The project owner shall make the site available for inspection of equipment and fuel purchase records by representatives of the District, ARB, and the Energy Commission.		
AQ-43 A non-resettable hour meter with a minimum display capability of 9,999 hours shall be installed and maintained on this unit to indicate elapsed engine operating time. (Title 17 CCR §93115.10(e)(1)).	X-COC	
Verification: At least thirty (30) days prior to the installation of the engine, the project owner shall provide the District and the CPM the specification of the hour timer.		
AQ-44 This unit shall be limited to use for emergency fire suppression, defined as in response to a fire or due to low fire water pressure. In addition, this unit shall be operated no more than 50 hours per year for testing and maintenance, excluding compliance source testing. Time required for source testing will not be counted toward the 50 hour per year limit. The 50 hour limit can be exceeded when the emergency fire pump assembly is driven directly by a stationary diesel fueled CI engine operated per and in accord with the National Fire Protection Association (NFPA) 25 - "Standard for the Inspection, Testing, and Maintenance of Water-Based Fire Protection Systems," 1998 edition. This requirement includes usage during emergencies. {Title 17 CCR 93115.3(n)}	X-COC	
Verification: The project owner shall make the site available for inspection of records and equipment by representatives of the District, ARB, and the Energy Commission.		
AQ-45 The project owner shall maintain a operations log for this unit current and onsite, either at the engine location or at a on-site location, for a minimum of two (2) years, and for another year where it can be made available to the District staff within five (5) working days from the District's request, and this log shall be provided to District, State and Federal personnel upon request. The log shall include, at a minimum, the information specified below: a. Date of each use and duration of each use (in hours); b. Reason for use (testing & maintenance, emergency, required emission testing); c. Calendar year operation in terms of fuel consumption (in gallons) and total hours; and, d. Fuel sulfur concentration (the project owner may use the supplier's certification of sulfur content if it is maintained as part of this log).	X-COC	

[1] Applies only where ground disturbance is expected (trenching, replacement poles and interset poles).
[2] COC = Conditions of Certification from the CEC Final License Decision for the Abengoa Mojave Solar Plant Project.
[3] SCE maintains responsibility for implementation of environmental protection measures, design measures, and best management practices for the Lockhart Substation and SPS Project, as described in Chapter 2.0 of the EA, including the CEC Final License Decision COCs, which are applicable to the Lockhart Substation.

Environmental Protection Measures, Design Measures, BMPs, and CEC Conditions	Responsible Party	
	Mojave Solar	SCE [3]
Verification: The project owner shall submit records required by this condition that demonstrating compliance with the sulfur content and engine use limitations of conditions AQ-42, AQ-44, and AQ-46 in the Annual Compliance Report, including a photograph showing the annual reading of engine hours. The project owner shall make the site available for inspection of records by representatives of the District, ARB, and the Energy Commission.		
AQ-46 No two permitted stationary emergency engines (emergency generators or emergency fire pump engines) shall be readiness tested on the same calendar day.	X-COC	
Verification: The project owner shall make the site available for inspection of records and equipment by representatives of the District, ARB, and the Energy Commission.		
AQ-47 This engine shall exhaust through a stack at a minimum height of 60 feet.	X-COC	
Verification: The project owner shall make the site available for inspection of equipment by representatives of the District, ARB, and the Energy Commission.		
AQ-48 This unit is subject to the requirements of the Airborne Toxic Control Measure (ATCM) for Stationary Compression Ignition Engines (Title 17 CCR 93115). In the event of conflict between these conditions and the ATCM, the requirements of the ATCM shall govern.	X-COC	
Verification: Not necessary.		
AQ-49 This unit is subject to the requirements of the Federal National Source Performance Standards (NSPS) for Stationary Compression Ignition Internal Combustion Engines (40 CFR Part 60 Subpart IIII).	X-COC	
Verification: The project owner shall submit the engine specifications at least 30 days prior to purchasing the engines for review and approval demonstrating that the engines meet NSPS and ARB ATCM emission limit requirements at the time of engine purchase.		
Equipment: One – Above ground gasoline storage tank and fuel receiving and dispensing equipment.		
AQ-50 The toll-free telephone number that must be posted is 1-800-635-4617.	X-COC	
Verification: The project owner shall make the site available for inspection of records by representatives of the District, ARB, and the Energy Commission.		
AQ-51 The project owner shall maintain a log of all inspections, repairs, and maintenance on equipment subject to Rule 461. Such logs or records shall be maintained at the facility for at least two (2) years and shall be available to the District upon request.	X-COC	
Verification: The project owner shall make the site available for inspection of records by representatives of the District, ARB, and the Energy Commission.		

[1] Applies only where ground disturbance is expected (trenching, replacement poles and interset poles).
[2] COC = Conditions of Certification from the CEC Final License Decision for the Abengoa Mojave Solar Plant Project.
[3] SCE maintains responsibility for implementation of environmental protection measures, design measures, and best management practices for the Lockhart Substation and SPS Project, as described in Chapter 2.0 of the EA, including the CEC Final License Decision COCs, which are applicable to the Lockhart Substation.

Environmental Protection Measures, Design Measures, BMPs, and CEC Conditions	Responsible Party	
	Mojave Solar	SCE [3]
AQ-52 Any modifications or changes to the piping or control fitting of the vapor recovery system require prior approval from the District.	X-COC	
Verification: The project owner shall make the site available for inspection of records by representatives of the District, ARB, and the Energy Commission.		
AQ-53 The gasoline vapor vent pipe(s) are to be equipped with pressure relief valve(s) per applicable CARB requirements.	X-COC	
Verification: The project owner shall make the site available for inspection of records by representatives of the District, ARB, and the Energy Commission.		
AQ-54 The project owner shall perform the following tests within 60 days of construction completion and annually thereafter in accordance with the applicable CARB test methods. The District shall be notified a minimum of 10 days prior to performing the required tests with the final results submitted to the District within 30 days of completion of the tests. The District shall receive passing test reports no later than six (6) weeks prior to the expiration date of this permit.	X-COC	
Verification: The project owner shall notify the District at least 10 days prior to performing the required tests. The test results shall be submitted to the District within 30 days of completion of the tests and shall be made available to the CPM if requested.		
AQ-55 The annual throughput of gasoline shall not exceed 25,000 gallons per year. Throughput Records shall be kept on site and available to District personnel upon request. Before this annual throughput can be increased the facility may be required to submit to the District a site specific Health Risk Assessment in accord with a District approved plan. In addition public notice and/or comment period may be required.	X-COC	
Verification: The project owner shall submit to the CPM gasoline throughput records demonstrating compliance with this condition as part of the Annual Compliance Report. The project owner shall maintain on site the annual gasoline throughput records and shall make the site available for inspection of records by representatives of the District, ARB, and the Energy Commission.		
AQ-56 The project owner shall install, operate, and maintain CARB approved Phase I and Phase II vapor recovery systems on the proposed facility gasoline tank and dispensing system. The Phase I and Phase II vapor recovery systems will meet all applicable CARB standards at the time of installation for the systems selected.	X-COC	

[1] Applies only where ground disturbance is expected (trenching, replacement poles and interset poles).
[2] COC = Conditions of Certification from the CEC Final License Decision for the Abengoa Mojave Solar Plant Project.
[3] SCE maintains responsibility for implementation of environmental protection measures, design measures, and best management practices for the Lockhart Substation and SPS Project, as described in Chapter 2.0 of the EA, including the CEC Final License Decision COCs, which are applicable to the Lockhart Substation.

Environmental Protection Measures, Design Measures, BMPs, and CEC Conditions	Responsible Party	
	Mojave Solar	SCE [3]
Verification: The project owner shall make the site available for inspection of records by representatives of the District, ARB, and the Energy Commission.		
AQ-57 The California Air Resources Board (CARB) has established a timeline for Aboveground Storage Tanks (AST) Enhanced Vapor Recovery (EVR) system implementation. Pursuant to CARB requirements and State mandated retrofits, the project owner shall ensure that this tank meets all the applicable requirements within the designated timeframes. Prior to conducting any modifications the project owner shall obtain a District approved Authority to Construct (ATC) Permit. See the following link for AST EVR Timeline: http://o3.arb.ca.gov/vapor/asttimeline_123009.pdf	X-COC	
Verification: The project owner shall provide the District and the CPM documentation, at least 30 days prior to installation, showing that the tank at the time of installation will meet appropriate ARB EVR requirements.		
AQ-58 The annual throughput of gasoline shall not exceed 600,000 gallons per year. Throughput Records shall be kept on site and available to District personnel upon request. Before this annual throughput can be increased the facility may be required to submit to the District a site specific Health Risk Assessment in accord with a District approved plan. In addition public notice and/or comment period may be required.	X-COC	
Verification: The project owner shall submit to the CPM gasoline throughput records demonstrating compliance with this condition as part of the Annual Compliance Report. The project owner shall maintain on site the annual gasoline throughput records and shall make the site available for inspection of records by representatives of the District, ARB, and the Energy Commission.		
AQ-59 The project owner shall install, maintain, and operate EVR Phase I in compliance with CARB Executive Order VR-401-A, and Phase II vapor recovery in accordance with G-70-116-F. In the event of conflict between these permit conditions and/or the referenced EO's the more stringent requirements shall govern.	X-COC	
Verification: The project owner shall make the site available for inspection of records by representatives of the District, ARB, and the Energy Commission.		

[1] Applies only where ground disturbance is expected (trenching, replacement poles and interset poles).
[2] COC = Conditions of Certification from the CEC Final License Decision for the Abengoa Mojave Solar Plant Project.
[3] SCE maintains responsibility for implementation of environmental protection measures, design measures, and best management practices for the Lockhart Substation and SPS Project, as described in Chapter 2.0 of the EA, including the CEC Final License Decision COCs, which are applicable to the Lockhart Substation.

Environmental Protection Measures, Design Measures, BMPs, and CEC Conditions	Responsible Party	
	Mojave Solar	SCE [3]
Noise		
Conditions of Certification From the California Energy Commission's Final Decision		
NOISE-1 At least 15 days prior to the start of ground disturbance, the Project owner shall notify all residents and business owners within two miles of the project site boundaries and within ½-mile of the linear facilities, by mail or other effective means, of the commencement of construction. At the same time, the Project owner shall establish a telephone number for use by the public to report any undesirable noise conditions associated with the construction and operation of the Project. If a telephone is not staffed 24 hours a day, the project owner shall include an automatic answering feature, with date and time stamp recording, to answer calls when the phone is unattended. This telephone number shall be posted at the project site during construction where it is visible to passersby. This telephone number shall be mainteained until the project has been operational for at least one year.	X-COC	X
Verification: At least 15 days prior to the start of ground disturbance, the project owner shall transmit to the compliance project manager (CPM) a statement, signed by the project owner's project manager, stating that the above notification has been performed, and describing the method of that notification. This communication shall also verify that the telephone number has been established and posted at the site, and shall provide that telephone number.		
NOISE-2 Throughout the construction and operation of the project, the project owner shall document, investigate, evaluate, and attempt to resolve all legitimate 46 project-related noise complaints. The project owner or authorized agent shall: Use the Noise Complaint Resolution equivalent procedure acceptable to the CPM, to document and respond to each noise complaint; • Attempt to contact the person(s) making the noise complaint within 24 hours; • Conduct an investigation to determine the source of noise in the complaint; • If the noise is legitimate project related, take all feasible measures to reduce the source of the noise; and • Submit a report documenting the complaint and actions taken. The report shall include: a complaint summary, including the final results of noise reduction efforts and, if obtainable, a signed statement by the Form in the Final License Decision, or a functionally complainant stating that the noise problem has been resolved to the complainant's satisfaction.	X-COC	X

[1] Applies only where ground disturbance is expected (trenching, replacement poles and interset poles).
[2] COC = Conditions of Certification from the CEC Final License Decision for the Abengoa Mojave Solar Plant Project.
[3] SCE maintains responsibility for implementation of environmental protection measures, design measures, and best management practices for the Lockhart Substation and SPS Project, as described in Chapter 2.0 of the EA, including the CEC Final License Decision COCs, which are applicable to the Lockhart Substation.

Environmental Protection Measures, Design Measures, BMPs, and CEC Conditions	Responsible Party	
	Mojave Solar	SCE [3]
Verification: Within five days of receiving a noise complaint, the project owner shall file a Noise Complaint Resolution Form, shown below, with both the local jurisdiction and the CPM, that documents the resolution of the complaint. If mitigation is required to resolve the complaint, and the complaint is not resolved within a three-day period, the project owner shall submit an updated Noise Complaint Resolution Form when the mitigation is performed and complete.		
NOISE-3 The project owner shall submit to the CPM for review and approval a noise control program. The noise control program shall be used to reduce employee exposure to high (above permissible) noise levels during construction in accordance to the applicable OSHA and Cal-OSHA standards.	X-COC	X
Verification: At least 30 days prior to the start of ground disturbance, the project owner shall submit the noise control program to the CPM. The project owner shall make the program available to Cal-OSHA upon request.		
NOISE-4 The project design and implementation shall include appropriate noise mitigation measures adequate to ensure that the operation of the project will not cause the noise levels due to plant operation alone, during the daylight hours (when the project is capable of producing electricity), to exceed an average of 55 dBA measured at or near monitoring location LT-1 (15563 Edie Road), an average of 43 dBA measured at or near monitoring location LT-2 (41234 Harper Lake Road), an average of 55 dBA measured at or near monitoring location ST-1 (15635 Lockhart Road), and an average of 49 dBA measured at or near monitoring location ST-2 (15654 Roy Road). Also, the project design and implementation shall include appropriate noise mitigation measures adequate to ensure that the operation of the project will not cause the noise levels due to plant operation alone, during the four quietest consecutive hours of the nighttime, to exceed an average of 24 dBA measured at or near monitoring location LT-1 (15563 Edie Road), an average of 30 dBA measured at or near monitoring location LT-2 (41234 Harper Lake Road), an average of 24 dBA measured at or near monitoring location ST-1 (15635 Lockhart Road), and an average of 24 dBA measured at or near monitoring location ST-2 (15654 Roy Road). All noise limitations contained in this condition of certification are independent of ambient levels. The limitations are placed on noise created by the project plant operation alone. No new pure-tone components shall be caused by the project. No single piece of equipment shall be allowed to stand out as a source of noise that draws legitimate complaints. A. When the project first achieves a sustained output of 90% or greater of rated capacity, the project owner shall conduct a 25-hour community noise survey at monitoring location LT-1, or at a closer	X-COC	X

[1] Applies only where ground disturbance is expected (trenching, replacement poles and interset poles).
[2] COC = Conditions of Certification from the CEC Final License Decision for the Abengoa Mojave Solar Plant Project.
[3] SCE maintains responsibility for implementation of environmental protection measures, design measures, and best management practices for the Lockhart Substation and SPS Project, as described in Chapter 2.0 of the EA, including the CEC Final License Decision COCs, which are applicable to the Lockhart Substation.

Environmental Protection Measures, Design Measures, BMPs, and CEC Conditions	Responsible Party	
	Mojave Solar	SCE [3]
location acceptable to the CPM. This survey shall be conducted during a windy day to be representative of the normal daytime environment in the project area. This survey during the power plant's full-load operation shall also include measurement of one-third octave band sound pressure levels to ensure that no new pure-tone noise components have been caused by the project. During the period of this survey, the project owner shall conduct a shortterm survey of noise at each of the monitoring locations LT-2, ST-1, and ST-2, or at closer locations acceptable to the CPM. The shortterm noise measurements at these locations shall be conducted during the daylight hours and again during the nighttime hours of 10:00 p.m. to 7:00 a.m. The measurement of power plant noise for the purposes of demonstrating compliance with this condition of certification may alternatively be made at a location, acceptable to the CPM, closer to the plant (e.g., 400 feet from the plant boundary) and this measured level then mathematically extrapolated to determine the plant noise contribution at the affected residence. The character of the plant noise shall be evaluated at the affected receptor locations to determine the presence of pure tones or other dominant sources of plant noise. B. If the results from the noise survey indicate that the power plant noise at the affected receptor sites exceeds the above values during the above specified period(s) of time, mitigation measures shall be implemented to reduce noise to a level of compliance with these limits. C. If the results from the noise survey indicate that pure tones are present, mitigation measures shall be implemented to eliminate the pure tones.		
Verification: The survey shall take place within 90 days of the project first achieving a sustained output of 90% or greater of rated capacity. Within 30 days after completing the survey, the project owner shall submit a summary report of the survey to the CPM. Included in the survey report will be a description of any additional mitigation measures necessary to achieve compliance with the above listed noise limit, and a schedule, subject to CPM approval, for implementing these measures. When these measures are in place, the project owner shall repeat the noise survey. Within 30 days of completion of the new survey, the project owner shall submit to the CPM a summary report of the new noise survey, performed as described above and showing compliance with this condition.		
NOISE-5 Following the project's attainment of a sustained output of 90% or greater of its rated capacity, the project owner shall conduct an occupational noise survey to identify any noise hazardous areas in the facility. The survey shall be conducted by a qualified person in accordance with the provisions of Title 8, California Code of Regulations, sections 5095-5099 (Article 105) and Title 29, Code of Federal Regulations,	X-COC	X

[1] Applies only where ground disturbance is expected (trenching, replacement poles and interset poles).
[2] COC = Conditions of Certification from the CEC Final License Decision for the Abengoa Mojave Solar Plant Project.
[3] SCE maintains responsibility for implementation of environmental protection measures, design measures, and best management practices for the Lockhart Substation and SPS Project, as described in Chapter 2.0 of the EA, including the CEC Final License Decision COCs, which are applicable to the Lockhart Substation.

Environmental Protection Measures, Design Measures, BMPs, and CEC Conditions	Responsible Party	
	Mojave Solar	SCE [3]
section 1910.95. The survey results shall be used to determine the magnitude of employee noise exposure. The project owner shall prepare a report of the survey results and, if necessary, identify proposed mitigation measures to be employed in order to comply with the applicable California and federal regulations.		
Verification: Within 30 days after completing the survey, the project owner shall submit the noise survey report to the CPM. The project owner shall make the report available to OSHA and Cal-OSHA upon request.		
NOISE-6 Noisy equipment operation and noisy construction work relating to any project features shall be restricted to the times delineated below, unless the CPM has provided permission allowing extension of these hours for limited work approved by the CPM: Mondays through Saturdays: 7 a.m. to 7 p.m. Haul trucks and other engine-powered equipment shall be equipped with adequate mufflers. Haul trucks shall be operated in accordance with posted speed limits. Truck engine exhaust brake use shall be limited to emergencies.	X-COC	X
Verification: Prior to ground disturbance, the project owner shall transmit to the CPM a statement acknowledging that the above restrictions will be observed throughout the construction of the project.		
NOISE-7 If a traditional, high-pressure steam blow process is used, the project owner shall monitor steam blow noise at the closest receptors, LT-1, ST-2, and ST-1, to ensure the noise of steam blows does not exceed 60 dBA at these locations. If this noise level is unattainable, the project owner shall either relocate the residents for the duration of steam blows to a location further away from these activities, or equip steam blow piping with a temporary silencer that quiets the noise of steam blows to no greater than 60 dBA, measured at LT-1, and ST-2., and ST-1. The steam blows shall be conducted between 7:00 a.m. and 7:00 p.m. unless arranged with the CPM such that offsite impacts would not cause annoyance to noise receptors. If a low-pressure, continuous steam blow process is used, the project owner shall submit to the CPM a description of the process, with expected noise levels and planned hours of steam blow operation.	X-COC	
Verification: At least 15 days prior to the first steam blow, the project owner shall notify all residents and business owners within two miles of the project site. The notification may be in the form of letters, phone calls, fliers, or other effective means as approved by the CPM. The notification shall include a description of the purpose and nature of the steam blow(s), the planned schedule, expected sound levels, and explanation that it is a one-time activity and not part of normal plant operation. During steam blow activities, noise levels will be monitored at receptor locations LT-1, ST-1, and ST-2 and the results reported to the CPM.		

[1] Applies only where ground disturbance is expected (trenching, replacement poles and interset poles).
[2] COC = Conditions of Certification from the CEC Final License Decision for the Abengoa Mojave Solar Plant Project.
[3] SCE maintains responsibility for implementation of environmental protection measures, design measures, and best management practices for the Lockhart Substation and SPS Project, as described in Chapter 2.0 of the EA, including the CEC Final License Decision COCs, which are applicable to the Lockhart Substation.

Environmental Protection Measures, Design Measures, BMPs, and CEC Conditions	Responsible Party	
	Mojave Solar	SCE [3]
Geology		
Seismic Safety Design Measures		
1. Power plant structures and equipment will be designed in accordance with seismic requirements of the Alquist-Priolo Earthquake Fault Zoning Act. For new substation construction, specific requirements for seismic design will be followed based on the Institute of Electrical and Electronic Engineers' 693 "Recommended Practices for Seismic Design of Substations."	X	X
2. Project foundations will be designed in accordance with recommendations provided in the final geotechnical design report for the AMSP and Lockhart Substation.	X	X
Erosion Control During Construction Phase		
1. Local soil berms and a detention area will be constructed to contain stormwater runoff.	X	X
2. Site grading, clearing, and grubbing will be confined to only those areas needed for facility construction as indicated in the conceptual grading plan.	X	X
3. Temporary erosion controls including crushed rock, silt fences and fiber rolls will be used as needed to minimize erosion in active grading areas. Soil stockpiles will be covered prior to forecasted storm events and during windy conditions. Fiber rolls or gravel bags will be placed around the perimeter of the stockpiles to further minimize the potential for runoff.	X	X
4. Additionally, water will be used to control dust and will be applied at a rate to minimize runoff.	X	X
5. An erosion control plan will be developed and implemented to ensure minimum soil loss and to maintain water quality. Temporary and long-term erosion control measures will be constructed and maintained as necessary during and following construction until long-term stabilization has been established.	X	X
Paleontology		
1. Prior to the start of any Project-related construction (defined as construction-related vegetation clearing, ground disturbance and preparation, and site excavation activities), the Project owner will ensure that the paleontological resource specialist is available for field activities and prepared to implement these measures. The paleontological resource specialist will be responsible for implementing all the paleontological measures and for using qualified personnel to assist in this work.	X	X [1]
2. Prior to the start of construction, a Paleontological Resource Monitoring and Mitigation Plan will be prepared by a paleontological resource specialist. The plan will identify general and specific	X	X [1]

[1] Applies only where ground disturbance is expected (trenching, replacement poles and interset poles).
[2] COC = Conditions of Certification from the CEC Final License Decision for the Abengoa Mojave Solar Plant Project.
[3] SCE maintains responsibility for implementation of environmental protection measures, design measures, and best management practices for the Lockhart Substation and SPS Project, as described in Chapter 2.0 of the EA, including the CEC Final License Decision COCs, which are applicable to the Lockhart Substation.

Environmental Protection Measures, Design Measures, BMPs, and CEC Conditions	Responsible Party	
	Mojave Solar	SCE [3]
measures to minimize potential impacts to sensitive paleontological resources. The Project paleontological resource specialist will implement the Paleontological Resource Monitoring and Mitigation Plan as needed. The Paleontological Resource Monitoring and Mitigation Plan will include, but not be limited to, the following elements and measures. • A discussion of the sequence of Project-related tasks, such as any preconstruction surveys, fieldwork, flagging or staking; construction monitoring; mapping and data recovery; fossil preparation and recovery; identification and inventory; preparation of final reports; and transmittal of materials for curation; • Identification of the person(s) expected to assist with each of the tasks identified within this condition, and a discussion of the mitigation team leadership and organizational structure, and the interrelationship of tasks and responsibilities; • Where monitoring of Project construction activities is deemed necessary, the extent of the areas where monitoring is to occur and a schedule for the monitoring; • An explanation that the designated paleontological resource specialist shall have the authority to halt or redirect construction in the immediate vicinity of a vertebrate fossil find until the significance of the find can be determined; • A discussion of the equipment and supplies necessary for the recovery of fossil materials and any specialized equipment needed to prepare, remove, load, transport, and analyze large-sized fossils or extensive fossil deposits; • Inventory, preparation, and delivery for curation into a retrievable storage collection in a public repository or museum that meets the SVP standards and requirements for the curation of paleontological resources; and Identification of the institution (expected to be the SBCM) that has agreed to receive any data and fossil materials recovered during Project-related monitoring and mitigation work, discussion of any requirements of specifications for materials delivered for curation and how they will be met, and the name and phone number of the contact person at the institution.		
3. Prior to the start of construction, the paleontological resource specialist will prepare a staff training program. The paleontological training program will address the potential to encounter paleontological resources in the field, the sensitivity and importance of these resources, and the legal obligations to preserve and protect such resources. The training program will also include the set of reporting	X	X [1]

[1] Applies only where ground disturbance is expected (trenching, replacement poles and interset poles).
[2] COC = Conditions of Certification from the CEC Final License Decision for the Abengoa Mojave Solar Plant Project.
[3] SCE maintains responsibility for implementation of environmental protection measures, design measures, and best management practices for the Lockhart Substation and SPS Project, as described in Chapter 2.0 of the EA, including the CEC Final License Decision COCs, which are applicable to the Lockhart Substation.

Environmental Protection Measures, Design Measures, BMPs, and CEC Conditions	Responsible Party	
	Mojave Solar	SCE [3]
procedures that workers are to follow if paleontological resources are encountered during Project activities.		
4. During construction, the designated paleontological resource specialist or paleontological monitor will monitor construction-related grading, excavation, trenching, and/or augering in areas with a significant potential for fossil-bearing sediments to occur. All ground disturbances in Quaternary older alluvium (greater than 5 feet in depth) and Quaternary lake deposits will be monitored on a full-time basis because of their high paleontological sensitivity. All ground disturbances in Quaternary younger alluvium (at or less than 5 feet in depth) will be spot-checked by paleontological monitors. Paleontological monitoring will include inspection of exposed rock units and microscopic examination of matrix to determine if fossils are present. Paleontological monitors will have authority to temporarily divert excavations or drilling away from exposed fossils in order to efficiently and professionally recover the fossil specimens and collect associated data.	X	X [1]
5. The Project owner, through the designated paleontological resource specialist, will ensure recovery, preparation for analysis, analysis, identification and inventory, the preparation for curation, and the delivery for curation of all significant paleontological resource materials encountered and collected during the monitoring, data recovery, mapping, and mitigation activities related to the Project.	X	X [1]
6. The Project owner will ensure preparation of a Paleontological Resources Report by the designated paleontological resource specialist following the analysis of the recovered fossil materials and related information. The report will include a description and inventory list of recovered fossil materials, a map showing the location of paleontological resources found in the field, determinations of sensitivity and significance, and a statement by the paleontological resource specialist that Project impacts to paleontological resources have been mitigated.	X	X [1]
Water Resources		
BMPs for Construction and Operational Impacts.		
1. Initially, grading will proceed in a systematic manner in those areas needed for site construction and operation. Undisturbed areas will remain so until being actively graded.	X	X
2. Berms are proposed to be used along slopes or check structures to control sediment loss and erosion. As indicated for the storm channel sections, riprap gabions or other erosion control measures will be used to minimize scour and erosion.	X	X

[1] Applies only where ground disturbance is expected (trenching, replacement poles and interset poles).
[2] COC = Conditions of Certification from the CEC Final License Decision for the Abengoa Mojave Solar Plant Project.
[3] SCE maintains responsibility for implementation of environmental protection measures, design measures, and best management practices for the Lockhart Substation and SPS Project, as described in Chapter 2.0 of the EA, including the CEC Final License Decision COCs, which are applicable to the Lockhart Substation.

Environmental Protection Measures, Design Measures, BMPs, and CEC Conditions	Responsible Party	
	Mojave Solar	SCE [3]
3. Roads and paved areas are proposed to be kept free of dust, dirt, and visible soil materials. A stabilized construction entrance/exit shall be constructed and maintained. Stabilized construction roadways will be used throughout the Project site and maintained throughout the construction period. Water is proposed to be used to control fugitive dust emissions and applied as to minimize and control water runoff.	X	X
4. BMPs are proposed to be applied and, if necessary, erosion control materials/structures shall be repaired as soon as erosion is evident or a particular measure fails. Temporary erosion control measures are proposed as well and temporary sediment control materials are proposed to be maintained onsite throughout the construction period to respond as needed to unforeseen rain or emergencies.	X	X
5. The AMSP will develop and implement a Channel Maintenance Program for routine maintenance of the storm water channels to protect the integrity of the channels from erosion and sedimentation.	X	
Conditions of Certification From the California Energy Commission's Final Decision		
SOIL&WATER-1 Prior to site mobilization, the project owner shall obtain the Compliance Project Manager's (CPM) approval for a site specific DESCP that ensures protection of water quality and soil resources of the project site and all linear facilities for both the construction and operation phases of the project. This plan shall address appropriate methods and actions, both temporary and permanent, for the protection of water quality and soil resources, demonstrate no increase in off-site flooding potential, and identify all monitoring and maintenance activities. The project owner shall complete all engineering plans, reports, and documents necessary for the CPM to conduct a review of the proposed project and provide a written evaluation as to whether the proposed grading, drainage improvements, and flood management activities comply with all requirements presented herein. The plan shall be consistent with the grading and drainage plan as required by Condition of Certification CIVIL-1 and shall contain the following elements: **Vicinity Map:** A map shall be provided indicating the location of all project elements with depictions of all major geographic features to include watercourses, washes, irrigation and drainage canals, major utilities, and sensitive areas. **Site Delineation:** The site and all project elements shall be delineated showing boundary lines of all construction areas and the location of all existing and proposed structures, underground utilities, roads, and drainage facilities. Adjacent property owners shall be identified on the plan maps. All maps shall be presented at a legible scale	X-COC	X

[1] Applies only where ground disturbance is expected (trenching, replacement poles and interset poles).
[2] COC = Conditions of Certification from the CEC Final License Decision for the Abengoa Mojave Solar Plant Project.
[3] SCE maintains responsibility for implementation of environmental protection measures, design measures, and best management practices for the Lockhart Substation and SPS Project, as described in Chapter 2.0 of the EA, including the CEC Final License Decision COCs, which are applicable to the Lockhart Substation.

Environmental Protection Measures, Design Measures, BMPs, and CEC Conditions	Responsible Party	
	Mojave Solar	SCE [3]
Drainage: The DESCP shall include the following elements: a. Topography. Topography for off-site areas are required to define the existing upstream tributary areas to the site and downstream to provide enough definition to map the existing storm water flow and flood hazard. Spot elevations shall be required where relatively flat conditions exist. b. Proposed Grade. Proposed grade contours shall be shown at a scale appropriate for delineation of on-site ephemeral washes, drainage ditches, and tie-ins to the existing topography. A clear indication of on-site storm water containment features (berm, etc.) should also be delineated. c. Hydrology. Existing and proposed hydrologic calculations for on-site areas and off-site areas that drain to the site; include maps showing the drainage area boundaries and sizes in acres, topography and typical overland flow directions, and show all existing, interim, and proposed drainage infrastructure and their intended direction of flow. d. Hydraulics. Provide hydraulic calculations to support the selection and sizing of the on-site drainage network, diversion facilities and BMPs. e. Containment. Description of on-site storm water containment features. Indicate how the project will maintain a “no discharge” status. **Watercourses and Critical Areas:** The DESCP shall show the location of all on-site and nearby watercourses including washes, irrigation and drainage canals, and drainage ditches, and shall indicate the proximity of those features to the construction site. Maps shall identify high hazard flood prone areas. **Clearing and Grading:** The plan shall provide a delineation of all areas to be cleared of vegetation and areas to be preserved. The plan shall provide elevations, slopes, locations, and extent of all proposed grading as shown by contours, cross-sections, cut/fill depths or other means. The locations of any disposal areas, fills, or other special features shall also be shown. Existing and proposed topography tying in proposed contours with existing topography shall be illustrated. The DESCP shall include a statement of the quantities of material excavated at the site, whether such excavations or fill is temporary or permanent, and the amount of such material to be imported or exported or a statement explaining that there would be no clearing and/or grading conducted for each element of the project. Areas of no disturbance shall be properly identified and delineated on the plan maps. **Soil Wind and Water Erosion Control:** The plan shall describe soil treatments to be used during construction and operation of the proposed project for both road and non-road surfaces including specifically identifying all chemical based dust palliatives, soil bonding, and weighting agents appropriate for use at the proposed project site that would not cause adverse effects to vegetation; BMPs shall include measures		

[1] Applies only where ground disturbance is expected (trenching, replacement poles and interset poles).
[2] COC = Conditions of Certification from the CEC Final License Decision for the Abengoa Mojave Solar Plant Project.
[3] SCE maintains responsibility for implementation of environmental protection measures, design measures, and best management practices for the Lockhart Substation and SPS Project, as described in Chapter 2.0 of the EA, including the CEC Final License Decision COCs, which are applicable to the Lockhart Substation.

Environmental Protection Measures, Design Measures, BMPs, and CEC Conditions	Responsible Party	
	Mojave Solar	SCE [3]
designed to prevent wind and water erosion including application of chemical dust palliatives after rough grading to limit water use. All dust palliatives, soil binders, and weighting agents shall be approved by the CPM prior to use. **Project Schedule:** The DESCP shall identify on the topographic site map the location of the site-specific BMPs to be employed during each phase of construction (initial grading, project element construction, and final grading/stabilization). BMP implementation schedules shall be provided for each project element for each phase of construction. **Best Management Practices:** The DESCP shall show the location, timing, and maintenance schedule of all erosion- and sediment-control BMPs to be used prior to initial grading, during project element excavation and construction, during final grading/stabilization, and after construction. BMPs shall include measures designed to control dust and stabilize construction access roads and entrances. The maintenance schedule shall include post-construction maintenance of treatment-control BMPs applied to disturbed areas following construction. **Erosion Control Drawings:** The erosion-control drawings and narrative shall be designed, stamped and sealed by a professional engineer or erosion-control specialist. **Agency Comments:** The DESCP shall include copies of recommendations from the County of San Bernardino and RWQCB. **Monitoring Plan:** Monitoring activities shall include routine measurement of the volume of accumulated sediment in the on-site containment berms, drainage ditches, and storm water diversions. The monitoring plan shall be part of the channel maintenance plan in Condition of Certification SOIL&WATER-3.		
Verification: The DESCP shall be consistent with the grading and drainage plan as required by Condition of Certification CIVIL-1, and relevant portions of the DESCP shall be submitted to the Chief Building Official (CBO) for review and approval. In addition, the project owner shall do all of the following: 1. No later than sixty (60) days prior to start of site mobilization, the project owner shall submit a copy of the DESCP to the County of San Bernardino and the RWQCB for review and comment. The CPM shall consider comments received from San Bernardino County and RWQCB and approve the DESCP based on comments as appropriate. 2. During construction, the project owner shall provide an analysis in the monthly compliance report on the effectiveness of the drainage, erosion, and sediment control measures and the results of monitoring and maintenance activities. 3. Once operational, the project owner shall provide in the annual compliance report information on the		

[1] Applies only where ground disturbance is expected (trenching, replacement poles and interset poles).
[2] COC = Conditions of Certification from the CEC Final License Decision for the Abengoa Mojave Solar Plant Project.
[3] SCE maintains responsibility for implementation of environmental protection measures, design measures, and best management practices for the Lockhart Substation and SPS Project, as described in Chapter 2.0 of the EA, including the CEC Final License Decision COCs, which are applicable to the Lockhart Substation.

Environmental Protection Measures, Design Measures, BMPs, and CEC Conditions	Responsible Party	
	Mojave Solar	SCE [3]
results of storm water BMP monitoring and maintenance activities. The project owner shall also indicate what maintenance activities were completed to maintain the project's on-site storm water flow. 4. Provide the CPM with two (2) copies each of all monitoring or compliance reports.		
SOIL&WATER-2 The project owner shall comply with the Waste Discharge Requirements (WDRs) established in Soil and Water Resources Appendices C, D, and E for the construction and operation of the surface impoundments (evaporation ponds), land treatment units, and storm water management system. These requirements relate to discharges, or potential discharges, of waste that could affect the quality of waters of the state, and were developed in consultation with staff of the State Water Resources Control Board and/or the applicable California Regional Water Quality Control Board (hereafter "Water Boards"). It is the Commission's intent that these requirements be enforceable by both the Commission and the Water Boards. In furtherance of that objective, the Commission hereby delegates the enforcement of these requirements, and associated monitoring, inspection and annual fee collection authority, to the Water Boards. Accordingly, the Commission and the Water Board shall confer with each other and coordinate, as needed, in the enforcement of the requirements. The project owner shall pay the annual waste discharge permit fee associated with this facility to the Water Boards. In addition, the Water Boards may "prescribe" these requirements as waste discharge requirements pursuant to Water Code Section 13263 solely for the purposes of enforcement, monitoring, inspection, and the assessment of annual fees, consistent with Public Resources Code Section 25531, subdivision (c).	X-COC	
Verification: No later than sixty (60) days prior to any wastewater or storm water discharge or use of land treatment units, the AMS project shall provide documentation to the CPM, with copies to the Lahontan RWQCB, demonstrating compliance with the WDRs established in Appendices C, D, and E. Any changes to the design, construction, or operation of the ponds, treatment units, or storm water system shall be requested in writing to the CPM, with copies to the Lahontan RWQCB, and approved by the CPM, in consultation with the Lahontan RWQCB, prior to initiation of any changes. The AMS project shall provide to the CPM, with copies to the Lahontan RWQCB, all monitoring reports required by the WDRs, and fully explain any violations, exceedances, enforcement actions, or corrective actions related to construction or operation of the ponds, treatment units, or storm water system.		
SOIL&WATER-3 The AMS project shall develop and implement a Channel Maintenance Program for routine maintenance of the AMS Project storm water channels. The program shall include all channel maintenance as needed to protect the integrity of the channels from erosion and sedimentation.	X-COC	

[1] Applies only where ground disturbance is expected (trenching, replacement poles and interset poles).
[2] COC = Conditions of Certification from the CEC Final License Decision for the Abengoa Mojave Solar Plant Project.
[3] SCE maintains responsibility for implementation of environmental protection measures, design measures, and best management practices for the Lockhart Substation and SPS Project, as described in Chapter 2.0 of the EA, including the CEC Final License Decision COCs, which are applicable to the Lockhart Substation.

Environmental Protection Measures, Design Measures, BMPs, and CEC Conditions	Responsible Party	
	Mojave Solar	SCE [3]
A. Purpose and Objectives. The program goals shall be to maintain storm water channels over the life of the project to meet their original design capacity for flood protection and conveyance and maintain groundwater recharge. Channels must have adequate capacity to convey the maximum designed flood stage flow and still maintain two feet of freeboard. B. Channel Maintenance Area. The channel maintenance area shall be defined as the AMS project engineered channels, which would extend to the top of the channel bank and include access roads and easements on top of the banks. C. Channel Maintenance Activities i. Sediment Removal. Sediment shall be removed if: (1) the effective channel flood capacity has been reduced to less than the design discharge; (2) appurtenant hydraulic structures are prevented from functioning as intended; or (3) a permanent, non-erodible barrier to instream flows has developed. ii. Vegetation Management. Vegetation shall be managed in and adjacent to the channels to maintain hydraulic capacity. Vegetation management shall include control of invasive and nonnative vegetation. iii. Bank Protection and Grade Control Repairs. Bank protection and grade control structure repairs shall be conducted by the AMS project to repair eroding banks, incising toes, scoured channel beds, and as preventative erosion protection. The AMS project shall implement instream repairs when channel damage: (1) causes or could cause significant damage to the AMS project, adjacent property, or the structural elements of the channels; (2) is a public safety concern; (3) negatively affects groundwater recharge; or (4) negatively affects channel mitigation vegetation. iv. Routine Channel Maintenance. Routine channel maintenance shall include: trash and debris removal to maintain channel design capacity; repair and installation of fences, gates and signs; and grading and other repairs to restore the original contour of access roads and levees (if applicable). D. Channel Maintenance Plan and Reporting 1. Channel Maintenance Plan. The Channel Maintenance Plan shall include: (1) the maintenance standards for each project channel; (2) policies to guide decision-making to ensure the maintenance standards are enforced; (3) procedures and BMPs to implement to ensure implementation of the policies; and (4) procedures and BMPs for sediment management, vegetation management, trash and debris removal, fence repairs, and access road maintenance.		

[1] Applies only where ground disturbance is expected (trenching, replacement poles and interset poles).
[2] COC = Conditions of Certification from the CEC Final License Decision for the Abengoa Mojave Solar Plant Project.
[3] SCE maintains responsibility for implementation of environmental protection measures, design measures, and best management practices for the Lockhart Substation and SPS Project, as described in Chapter 2.0 of the EA, including the CEC Final License Decision COCs, which are applicable to the Lockhart Substation.

Environmental Protection Measures, Design Measures, BMPs, and CEC Conditions	Responsible Party	
	Mojave Solar	SCE [3]
2. Channel Maintenance Reporting. The following plans and reports shall be submitted to the CPM each year as part of the Annual Compliance Report: a. Channel Maintenance Workplans. These workplans shall describe the planned "major" maintenance activities and extent of work to be accomplished. b. Annual Channel Maintenance Report. This report shall specify which maintenance activities were completed during the year including type of work, location, and measure of the activity (e.g. cubic yards of sediment removed). This report		
Verification: At least sixty (60) days before the start of project operation, the AMS project shall submit to the CPM a Channel Maintenance Plan for review and approval. The AMS project shall provide written notification to the CPM at least sixty (60) days in advance of any planned changes to the Channel Maintenance Plan. In addition, the project owner shall: 1. Implement the Channel Maintenance Plan in Item D (Channel Maintenance Plan and Reporting); 2. Ensure that the AMS project Construction and Operations Managers receive training on the Channel Maintenance Plan; and 3. As part of the AMS project Annual Compliance Report, submit an Annual Channel Maintenance Report that specifies which maintenance activities were completed during the year including type of work, location, and measure of the activity (e.g. cubic yards of sediment removed).		
SOIL&WATER-4 Pre-Well Installation. The project owner shall construct and operate up to two on-site groundwater wells that produce water from the Harper Valley Groundwater Basin and two backup wells. The project owner shall ensure that the wells are completed in accordance with all applicable state and local water well construction requirements. If the perched water table is present where new wells will be constructed, the project wells shall be designed to prevent cross-connection between the lower quality perched groundwater and the upper aquifer. Prior to the start of well construction activities, the project owner shall submit for review and comment a well construction packet to the County of San Bernardino, in accordance with the County of San Bernardino Code Title 2, Division 3, Chapter 6, Article 5, containing the documentation, plans, and fees normally required for the county's well permit, with copies to the CPM. The project shall not construct a well or extract and use groundwater until the CPM provides approval to construct and operate the well. Post-Well Installation. The project owner shall provide documentation to the CPM that the well has been properly completed. In accordance with California's Water Code section 13754, the driller of the well shall submit to the DWR a Well Completion Report for each well installed. A copy of the Well Completion Report	X-COC	

[1] Applies only where ground disturbance is expected (trenching, replacement poles and interset poles).
[2] COC = Conditions of Certification from the CEC Final License Decision for the Abengoa Mojave Solar Plant Project.
[3] SCE maintains responsibility for implementation of environmental protection measures, design measures, and best management practices for the Lockhart Substation and SPS Project, as described in Chapter 2.0 of the EA, including the CEC Final License Decision COCs, which are applicable to the Lockhart Substation.

Environmental Protection Measures, Design Measures, BMPs, and CEC Conditions	Responsible Party	
	Mojave Solar	SCE [3]
shall be included in the documentation submitted to the CPM. Groundwater Well Abandonment. On property controlled by the project owner, the project owner shall protect groundwater resources by abandoning all groundwater wells that are constructed in such a manner that the screen interval of the well intercepts both the poor quality perched water and deeper aquifer water (uQal). These groundwater wells shall be abandoned in accordance with all applicable state and local water well abandonments requirements, including the California Department of Water Resources Bulletins 7481 & 74-90. Prior to the start of well construction activities, the project owner shall submit for review and comment a well abandonment packet to the County of San Bernardino, in accordance with the County of San Bernardino Code Title 3, Division 3, Article 3, containing the documentation, plans, and fees normally required for the county's well abandonment permit, with copies to the CPM. The project shall not abandon a well until the CPM provides approval.		
Verification: The project owner shall ensure the Well Completion Reports are submitted and shall ensure compliance with all State and county water well standards and requirements for the life of the wells. The project owner shall do all of the following: 1. No later than sixty (60) days prior to the construction of the on-site groundwater wells, the project owner shall submit a Groundwater Monitoring and Management Plan to the County of San Bernardino for review and comment (see Condition of Certification SOIL&WATER-6). 2. No later than sixty (60) days prior to the abandonment and construction of the on-site groundwater wells, the project owner shall submit to the CPM a copy of the water well abandonment and construction packet submitted to the County of San Bernardino for review and comment. 3. No later than thirty (30) days prior to the construction of the on-site water supply wells, the project owner shall submit a copy of any written comments received from the County of San Bernardino indicating whether the proposed well abandonment and construction activities comply with all county well requirements and meet the requirements established by the county's water well permit program. 4. No later than sixty (60) days after installation of each well at the project site, the project owner shall provide to the CPM copies of the Well Completion Reports submitted to the DWR by the well driller. The project owner shall submit to the CPM, together with the Well Completion Report, a copy of well drilling logs, water quality analyses, and any inspection reports. 5. During well construction and for the operational life of the well, the project owner shall submit two (2) copies to the CPM for review and approval any proposed well construction or operation changes. 6. The project owner shall provide the CPM with (2) two copies of all monitoring and other reports		

[1] Applies only where ground disturbance is expected (trenching, replacement poles and interset poles).
[2] COC = Conditions of Certification from the CEC Final License Decision for the Abengoa Mojave Solar Plant Project.
[3] SCE maintains responsibility for implementation of environmental protection measures, design measures, and best management practices for the Lockhart Substation and SPS Project, as described in Chapter 2.0 of the EA, including the CEC Final License Decision COCs, which are applicable to the Lockhart Substation.

Environmental Protection Measures, Design Measures, BMPs, and CEC Conditions	Responsible Party	
	Mojave Solar	SCE [3]
required for compliance with the County of San Bernardino water well standards and operation requirements. 7. No later than fifteen (15) days after completion of the on-site water supply wells, the project owner shall submit documentation to the CPM confirming that well drilling activities were conducted in compliance with Title 23, California Code of Regulations, Chapter 15, Discharges of Hazardous Wastes to Land, (23 CCR, sections 2510 et seq.) requirements and that any on-site drilling sumps used for project drilling activities were removed in compliance with 23 CCR section 2511(c).		
SOIL&WATER-5 The proposed project's use of groundwater for all construction and operations activities shall not exceed 2,160 acre-feet per year. The quantity of the groundwater used for project construction and operation shall be reported to ensure compliance with this condition. Prior to the use of groundwater for construction, the project owner shall install and maintain metering devices as part of the water supply and distribution system to document project water use and to monitor and record in gallons per day the total volume(s) of water supplied to the project from this water source. The metering devices shall be operational for the life of the project.	X-COC	X
Verification: Beginning six (6) months after the start of construction, the project owner shall prepare a semi-annual summary report of the amount of water used for construction purposes. The summary shall include the monthly range and monthly average of daily water usage in gallons per day. At least sixty (60) days prior to the start of construction of the proposed project, the project owner shall submit to the CPM a copy of evidence that metering devices have been installed and are operational. The project owner shall prepare an annual summary report, which will include maximum daily and monthly usage in gallons per day and the total monthly and annual usage in acre-feet. Following the first year of operation, the annual summary report will summarize the annual usage in tabular form. For calculating the total water use, the term "year" will correspond to the date established for the annual compliance report submittal.		
SOIL&WATER-6 The project owner shall submit a Groundwater Monitoring and Reporting Plan to the CPM for review and approval. This plan shall consist of two parts as defined by Conditions of Certification SOIL&WATER-6 and -7. SOIL&WATER-6 describes the requirements for establishing a groundwater well monitoring network and monitoring groundwater levels in that network. SOIL&WATER-7 describes the requirements for monitoring groundwater quality in the network. Mitigation for impacts related to project induced groundwater level declines or degradation in groundwater quality are provide in each condition of	X-COC	

[1] Applies only where ground disturbance is expected (trenching, replacement poles and interset poles).
[2] COC = Conditions of Certification from the CEC Final License Decision for the Abengoa Mojave Solar Plant Project.
[3] SCE maintains responsibility for implementation of environmental protection measures, design measures, and best management practices for the Lockhart Substation and SPS Project, as described in Chapter 2.0 of the EA, including the CEC Final License Decision COCs, which are applicable to the Lockhart Substation.

Environmental Protection Measures, Design Measures, BMPs, and CEC Conditions	Responsible Party	
	Mojave Solar	SCE [3]
certification. All work and reporting under these conditions of certification shall be conducted under the supervision of a licensed California professional geologist or engineer. The Groundwater Level Monitoring and Reporting Plan shall provide detailed methodology for monitoring background and site groundwater levels. Monitoring shall include pre-construction, construction, and project operation conditions. The primary objective for the monitoring is to establish a baseline of pre-construction groundwater level trends that can be quantitatively compared against observed and simulated trends near the project pumping wells and near potentially impacted existing wells during project construction and over the life of project operation. The project owner shall: A. Prior to Project Construction 1. Well Reconnaissance. Conduct a well reconnaissance to investigate and document condition of existing water supply wells within the monitoring area provided access is granted by the well owner). The monitoring area shall be defined by the 20foot contour of simulated groundwater drawdown induced by AMS project pumping at the end of the project life (as presented in Appendix B Figure Soil and Water 3). Notices shall be sent by registered mail to each well owner identified within monitoring area that provide the following information: a. A summary of the proposed project with an explanation of how the groundwater levels are expected to be lowered due to the AMS project groundwater pumping; b. An option for the well owner to be provided a copy of the Groundwater Monitoring and Report Plan as approved by the CPM and all reports prepared in compliance with the CPM-approved plan; c. The project owner's contact name, address, and telephone where the well owner can obtain more information; and d. The address and telephone number of the Energy Commission. 2. Monitoring Plan. Submit a Groundwater Level Monitoring and Reporting Plan to the CPM for review and approval at least sixty (60) days prior to construction. This plan shall include at a minimum: a. The monitoring plan and network of monitoring wells shall make use of two of the four project production wells (once installed), all monitoring wells installed to comply with Waste Discharge Requirements for the evaporation ponds and land treatment unit associated with the project, and the BLM marsh water supply well. In addition, and at least three additional existing wells in the Harper Lake area shall be incorporated into the program. The final well selection shall be		

[1] Applies only where ground disturbance is expected (trenching, replacement poles and interset poles).
[2] COC = Conditions of Certification from the CEC Final License Decision for the Abengoa Mojave Solar Plant Project.
[3] SCE maintains responsibility for implementation of environmental protection measures, design measures, and best management practices for the Lockhart Substation and SPS Project, as described in Chapter 2.0 of the EA, including the CEC Final License Decision COCs, which are applicable to the Lockhart Substation.

Environmental Protection Measures, Design Measures, BMPs, and CEC Conditions	Responsible Party	
	Mojave Solar	SCE [3]
based on access being granted by the owners and by BLM and that the wells are deemed by the CPM to be of suitable location and construction to satisfy the requirements for the monitoring program. Some Harper Lake area wells are already monitored, and these wells can be included as part of the network if they meet the objectives of the monitoring program. b. A scaled map showing the project site, boundary, location of all wells within the monitoring area, and location of wells selected for the monitoring network. The map shall also include relevant natural (e.g., faults, playa lake, etc.) and man-made features that are existing and proposed as part of the AMS project. c. Available well construction information, drilling and well installation methods, and borehole lithology for all wells in the monitoring area. d. For monitoring network wells, report the results of a wellhead elevation survey that record: the location and elevation of the well; the location and elevation of the top of the well casing reference point for all water level measurements (the measurement point); and the coordinate system and datum for the survey measurements. e. A description of how groundwater measurements will be collected and reported. All groundwater level measurements shall be made to the nearest **1/100 of a foot**. f. A description of the groundwater level measurements and reporting protocols and quality assurance/quality control plan. g. Information about the AMS project wells shall be added to a revised plan submitted to the CPM for review and approval within sixty (60) days after the project wells are installed. h. A description of the reporting requirements presented below, including a statistical analyses conducted on the data collected, the thresholds employed to determine impact i. A schedule for measuring water levels in all wells in the monitoring network. j. The plan shall be signed and stamped by a licensed California professional geologist or engineer. 3. Monitoring. Before the start of project construction, collect groundwater levels from all existing wells within the monitoring network, in accordance with the requirements in the Groundwater Level Monitoring and Reporting Plan, to establish pre-construction conditions. 4. Reporting. A report documenting the pre-construction monitoring results shall be submitted to the CPM after measuring groundwater levels in network wells. At a minimum, the report shall contain: a tabular summary of the network wells; the water level measurements; and dates of the water		

[1] Applies only where ground disturbance is expected (trenching, replacement poles and interset poles).
[2] COC = Conditions of Certification from the CEC Final License Decision for the Abengoa Mojave Solar Plant Project.
[3] SCE maintains responsibility for implementation of environmental protection measures, design measures, and best management practices for the Lockhart Substation and SPS Project, as described in Chapter 2.0 of the EA, including the CEC Final License Decision COCs, which are applicable to the Lockhart Substation.

Environmental Protection Measures, Design Measures, BMPs, and CEC Conditions	Responsible Party	
	Mojave Solar	SCE [3]
level measurements; diagrams showing water levels in the wells over time (hydrographs); a map of groundwater elevation contours and calculated gradients; and conclusions regarding groundwater level trends and recommendations for future monitoring and the likelihood of potential interferences to existing wells made by a licensed California professional geologist or engineer. B. During Construction: 1. Collect groundwater levels within the monitoring network on a quarterly basis throughout the construction period. Perform statistical trend analysis for groundwater levels data using linear regression or a non-parametric test such as Kendall-Theil Robust Line, or other appropriate statistical analysis. Assess the significance of apparent trends using appropriate statistical analysis and compare to observed background trends in other monitored wells in the sub-basin. 2. After measuring groundwater levels in network wells, submit to the CPM a report of pre-project groundwater levels, present a summary of available climatic information (monthly average temperature and rainfall records from the nearest weather station), and provide a comparison and assessment of water level data relative to the spatial trends simulated by the USGS Mojave River Basin Model (USGS2001). This report shall also contain a tabular summary of the wells, current and historical water level measurements, and dates of water level measurements; a map of the groundwater elevation contours and calculated gradients; and conclusion and recommendations of a licensed California professional geologist or engineer. C. During Operation: 1. On a quarterly basis for the first year of operation and semiannually thereafter for the following four years, collect groundwater level measurements from all wells identified in the groundwater monitoring network. Quarterly operational parameters (i.e., pumping rate and days on which pumping occurred) of the groundwater supply wells shall be monitored. 2. On an annual basis, perform statistical trend analysis (using linear regression or a non-parametric test such as Kendall-Theil Robust Line, or other appropriate statistical analysis) on water levels, compare water levels and trends to pre-project conditions, present a summary of available climatic information (monthly average temperature and rainfall records from the nearest weather station), and provide a comparison and assessment of water level data relative to the assumptions and spatial trends simulated by the USGS Mojave River Basin Model (USGS2001). The magnitude and significance of any trends shall be evaluated. Based on comparisons between pre-project, project, and background water level trends, the project owner shall estimate the groundwater level		

[1] Applies only where ground disturbance is expected (trenching, replacement poles and interset poles).
[2] COC = Conditions of Certification from the CEC Final License Decision for the Abengoa Mojave Solar Plant Project.
[3] SCE maintains responsibility for implementation of environmental protection measures, design measures, and best management practices for the Lockhart Substation and SPS Project, as described in Chapter 2.0 of the EA, including the CEC Final License Decision COCs, which are applicable to the Lockhart Substation.

Environmental Protection Measures, Design Measures, BMPs, and CEC Conditions	Responsible Party	
	Mojave Solar	SCE [3]
change attributed to project pumping. These calculations shall be supported using a tabular summary of the wells, current and historical water level measurements, a map of the groundwater elevation contours; calculated gradients; and conclusion and recommendations of a licensed California professional geologist or engineer. D. Mitigation: 1. If groundwater levels have been lowered more than 20 feet below pre-construction levels in an offsite well and monitoring data indicates the water level decline is attributed to project pumping, then the project owner shall assess the impact to the water column above the pump and well screen and related impact to well yield. 2. Mitigation shall be provided to well owners that experience 20 feet or more of project-induced drawdown if well monitoring data confirms project pumping causes all or a portion of the drawdown and either the previously submerged well screen has been exposed or the well yield or performance has been reduced such that the well fails to meet demand. The type and extent of mitigation shall be determined by the amount of water level decline induced by the project, the type of impact, and site specific well construction and water use characteristics. If an impact is determined to be caused by drawdown from more than one source, the level of mitigation provided shall be proportional to the amount of drawdown induced by the project relative to other sources. In order to be eligible, a well owner must provide documentation of the well location and construction, including pump intake depth, and evidence that the well was constructed in use before project pumping was initiated. The mitigation of impacts shall be determined as follows: a. Increased Electrical Usage. If project pumping has lowered a well's water levels and increased pumping lifts, increased energy costs shall be calculated. Payment or reimbursement for the increased costs shall be provided at the option of the affected well owner. In the absence of specific electrical use data supplied by the well owner, the following formula shall be used to calculate the additional electrical usage: Increased Cost for Energy = (change in lift/total hydraulic head) x (total energy consumption times costs/unit of energy)		

[1] Applies only where ground disturbance is expected (trenching, replacement poles and interset poles).
[2] COC = Conditions of Certification from the CEC Final License Decision for the Abengoa Mojave Solar Plant Project.
[3] SCE maintains responsibility for implementation of environmental protection measures, design measures, and best management practices for the Lockhart Substation and SPS Project, as described in Chapter 2.0 of the EA, including the CEC Final License Decision COCs, which are applicable to the Lockhart Substation.

Environmental Protection Measures, Design Measures, BMPs, and CEC Conditions	Responsible Party	
	Mojave Solar	SCE [3]
Where: change in lift (ft) = calculated change in water level in the well total hydraulic head (ft) = (elevation head) + (discharge pressure head) elevation head (ft) = (wellhead discharge pressure gauge elevation) – (water level elevation in well during pumping) discharge pressure head (ft) = (pressure in pounds per square inch at wellhead discharge gauge) x (2.31 to convert psi to feet of water) The project owner shall submit to the CPM for review and approval the documentation showing which well owners must be compensated for increased energy costs and that the proposed amount is sufficient compensation to comply with the provisions of this condition. i. Any reimbursements (either lump sum or annual) to impacted well owners shall be only to those well owners whose wells were in service within six months of the Commission decision and within the 20-foot contour interval established in Item A above. ii. The project owner shall notify all owners of the impacted wells within one month of the CPM approval of the compensation analysis for increase energy costs. iii. Compensation shall be provided on either a one-time lump-sum basis, or on an annual basis, as described below. a. Annual Compensation. Compensation provided on an annual basis shall be calculated prospectively for each year by estimating energy costs that will be incurred to provide the additional lift required as a result of the project. With the permission of the impacted well owner, the project owner shall provide energy meters for each well or well field affected by the project. The impacted well owner to receive compensation must provide		

[1] Applies only where ground disturbance is expected (trenching, replacement poles and interset poles).
[2] COC = Conditions of Certification from the CEC Final License Decision for the Abengoa Mojave Solar Plant Project.
[3] SCE maintains responsibility for implementation of environmental protection measures, design measures, and best management practices for the Lockhart Substation and SPS Project, as described in Chapter 2.0 of the EA, including the CEC Final License Decision COCs, which are applicable to the Lockhart Substation.

Environmental Protection Measures, Design Measures, BMPs, and CEC Conditions	Responsible Party	
	Mojave Solar	SCE [3]
documentation of energy consumption in the form of meter readings or other verification of fuel consumption. For each year after the first year of operation, the project owner shall include an adjustment for any deviations between projected and actual energy costs for the previous calendar year. b. One-Time Lump-Sum Compensation. Compensation provided on a one-time lump-sum basis shall be based on a well-interference analysis, assuming the maximum project-pumping rate of 2,160 AF/y. Compensation associated with increased pumping lift for the life of the project shall be estimated as a lump sum payment as follows: 1. The current cost of energy to the affected party considering time of use or tiers of energy cost applicable to the party's billing of electricity from the utility providing electric service, or a reasonable equivalent if the party independently generates their electricity; 2. An annual inflation factor for energy cost of 3 percent; and 3. A net present value determination assuming a term of 30 years and a discount rate of 9 percent; b. Well Screen Exposure. If groundwater monitoring data indicate project pumping has lowered water levels below the top of the well screen, and the well yield is shown no longer meet pre-project demand, compensation shall be provided to diagnose and treat well screen encrustation. Reimbursement shall be provided at an amount equal to the customary local cost of performing the necessary diagnosis and maintenance for well screen fouling. Should well yield reductions reoccur, the project owner shall provide payment or reimbursement for either periodic maintenance throughout the life of the project or replacement of the well. c. Well Yield. If project pumping has lowered water levels to significantly impact well yield so that it can no longer meet its intended purpose, causes the well to go dry, or cause casing collapse, payment or reimbursement of an amount equal to the cost of deepening or replacing the well shall be provided to accommodate these effects. Payment or reimbursement shall be at an amount equal to the customary local cost of deepening the existing well or constructing a new well of comparable design and yield (only deeper). The demand for water, which determines the required well yield, shall be determined on a per well basis using well owner interviews and field verification of property conditions and water requirements compiled as part of the pre-project well reconnaissance. Well yield shall be considered significantly impacted if it is		

[1] Applies only where ground disturbance is expected (trenching, replacement poles and interset poles).
[2] COC = Conditions of Certification from the CEC Final License Decision for the Abengoa Mojave Solar Plant Project.
[3] SCE maintains responsibility for implementation of environmental protection measures, design measures, and best management practices for the Lockhart Substation and SPS Project, as described in Chapter 2.0 of the EA, including the CEC Final License Decision COCs, which are applicable to the Lockhart Substation.

Environmental Protection Measures, Design Measures, BMPs, and CEC Conditions	Responsible Party	
	Mojave Solar	SCE [3]
incapable of meeting 100 percent of the well owner's maximum daily demand and 5-year average annual demand – assuming the pre-project well yield documented by the initial well reconnaissance met or exceeded these yield levels. The contribution of project pumping to observed decreases in observed well yield shall be determined by interpretation of the groundwater monitoring data collected and shall take into consideration the effect of other nearby pumping wells, basin-wide trends, and the condition of the well prior to the commencement of project pumping. d. The project owner shall notify any owners of the impacted wells within one month of the CPM approval of the compensation analysis. e. Pump Lowering. In the event that groundwater is lowered as a result of project pumping to an extent where pumps are exposed but well screens remain submerged, the pumps shall be lowered to maintain production in the well. The project shall reimburse the impacted well owner for the costs associated with lowering pumps in proportion to the project's contribution to the lowering of the groundwater table that resulted in the impact. f. Deepening of Wells. If the groundwater is lowered enough as a result of project pumping that well screens and/or pump intakes are exposed, and pump lowering is not an option, such affected wells shall be deepened or replacement wells constructed. The project shall reimburse the impacted well owner for all costs associated with deepening existing wells or constructing replacement wells in proportion to the project's contribution to the lowering of the water table that resulted in the impact. E. Monitoring Program Evaluation: 1. After the first five-year operational and monitoring period, and every subsequent 5-year period, the CPM shall evaluate the data and determine if the monitoring program water level measurement frequencies should be revised or eliminated. Revision or elimination of any monitoring program elements shall be based on the consistency of the data collected.		
Verification: The project owner shall do all of the following: 1. At least sixty (60) days prior to project construction, the project owner shall submit to the CPM, for review and approval, a comprehensive plan (Groundwater Level Monitoring and Reporting Plan) presenting all the data and information required in Item A above. The project owner shall submit to the both the CPM all calculations and assumptions made in development of the plan. 2. During project construction, the project owner shall submit to the CPM quarterly reports presenting all		

[1] Applies only where ground disturbance is expected (trenching, replacement poles and interset poles).
[2] COC = Conditions of Certification from the CEC Final License Decision for the Abengoa Mojave Solar Plant Project.
[3] SCE maintains responsibility for implementation of environmental protection measures, design measures, and best management practices for the Lockhart Substation and SPS Project, as described in Chapter 2.0 of the EA, including the CEC Final License Decision COCs, which are applicable to the Lockhart Substation.

Environmental Protection Measures, Design Measures, BMPs, and CEC Conditions	Responsible Party	
	Mojave Solar	SCE [3]
the data and information required in Item B above. The project owner shall submit to the CPM all calculations and assumptions made in development of the report data and interpretations. 3. No later than sixty (60) days after commencing project operation, the project owner shall provide to the CPM, for review and approval, documentation showing that any mitigation to private well owners during project construction was satisfied, based on the requirements of the property owner as determined by the CPM. 4. During project operation, the project owner shall submit to CPM, applicable quarterly, semi-annual, and annual reports presenting all the data and information required in Item C above. The project owner shall submit to the CPM all calculations and assumptions made in development of report data and interpretations, calculations, and assumptions used in development of any reports. 5. The project owner shall provide mitigation as described in Item D above, if the CPM's inspection of the monitoring information confirms project-induced changes to water levels and water level trends relative to measured pre-project water levels, and well yield has been lowered by project pumping. The type and extent of mitigation shall be determined by the amount of water level decline and site-specific well construction and water use characteristics. The mitigation of impacts will be determined as set forth in Item D above. 6. No later than 30 days after CPM approval of the well drawdown analysis, the project owner shall submit to the CPM for review and approval all documentation and calculations describing necessary compensation for energy costs associated with additional lift requirements. 7. The project owner shall submit to the CPM all calculations, along with any letters signed by the well owners indicating agreement with the calculations, and the name and phone numbers of those well owners that do not agree with the calculations. 8. If mitigation includes monetary compensation, the project owner shall provide documentation to the CPM that compensation payments have been made by March 31 of each year of project operation or, if a lump-sum payment is made, payment shall be made by March 31 of the following year. Within 30 days after compensation is paid, the project owner shall submit to the CPM a compliance report describing compensation for increased energy costs necessary to comply with the provisions of this condition. 9. After the first 5-year operational and monitoring period, and every subsequent 5-year period, the project owner shall submit a 5-year monitoring report to the CPM for review and approval. This report shall contain all monitoring data collected and provide a summary of the findings and a		

[1] Applies only where ground disturbance is expected (trenching, replacement poles and interset poles).
[2] COC = Conditions of Certification from the CEC Final License Decision for the Abengoa Mojave Solar Plant Project.
[3] SCE maintains responsibility for implementation of environmental protection measures, design measures, and best management practices for the Lockhart Substation and SPS Project, as described in Chapter 2.0 of the EA, including the CEC Final License Decision COCs, which are applicable to the Lockhart Substation.

Environmental Protection Measures, Design Measures, BMPs, and CEC Conditions	Responsible Party	
	Mojave Solar	SCE [3]
recommendation about whether the frequency of water level measurements should be revised or eliminated. 10. During the life of the project, the project owner shall provide to the CPM all monitoring reports, complaints, studies, and other relevant data within 10 days of being received by the project owner.		
SOIL&WATER-7 A water quality baseline of pre-construction conditions shall be established for all wells in the monitoring network established by Condition of Certification SOIL&WATER-6, including all monitoring wells that are installed to comply with Waste Discharge Requirements for the evaporation ponds and land treatment unit associated with the project, the existing BLM well and any retrofitted or newly installed BLM marsh water supply well. The primary objectives for the monitoring is to establish pre-construction and project related groundwater quality impacts that can be quantitatively evaluated to avoid, minimize, or mitigate significant adverse impacts to wells in the network from potential degradation in the quality of groundwater. A. Plan. The project owner shall submit a Groundwater Quality Monitoring and Reporting Plan to the CPM for review and approval at least sixty (60) days prior to project construction. The Groundwater Quality Monitoring and Reporting Plan shall be a part of the Groundwater Monitoring and Reporting Plan required under Condition of Certification SOIL&WATER-6, and shall include at a minimum: 1. A compilation of historical water quality data that can be used to establish baseline water quality conditions and compare with project water quality monitoring. 2. Where insufficient historical water quality data is available, identify additional sampling and analysis that will be completed prior to project construction to establish pre-project trends in water quality. 3. A description of the methodology for monitoring background and groundwater quality in all wells that are within the monitoring network established in Condition of Certification SOIL&WATER-6. 4. A description of the water quality analysis to be conducted on water samples collected from each well in the monitoring network. This description will include the purpose of each water quality analysis. 5. A description of the groundwater sample collection method for each analysis to be performed. 6. A description of the quality assurance/quality control that will be built into the sample collection and reporting protocol. 7. A description of the reporting requirements presented below, including a statistical analyses that will be performed on the data collected and a description of the mitigation that would be required	X-COC	

[1] Applies only where ground disturbance is expected (trenching, replacement poles and interset poles).
[2] COC = Conditions of Certification from the CEC Final License Decision for the Abengoa Mojave Solar Plant Project.
[3] SCE maintains responsibility for implementation of environmental protection measures, design measures, and best management practices for the Lockhart Substation and SPS Project, as described in Chapter 2.0 of the EA, including the CEC Final License Decision COCs, which are applicable to the Lockhart Substation.

Environmental Protection Measures, Design Measures, BMPs, and CEC Conditions	Responsible Party	
	Mojave Solar	SCE [3]
for significant water quality impacts. 8. A schedule for monitoring all wells in the monitoring network. B. Report During Pre-Construction. At least sixty (60) days prior to project construction, all groundwater quality monitoring data shall be submitted to the CPM for review and approval. The report shall include the following: 1. An assessment of pre-project groundwater quality with groundwater samples analyzed for TDS, chloride, nitrates, major cations and anions, and oxygen-18 and deuterium isotopes. These analyses, and particularly the stable isotope data, can be useful for identifying partially evaporated water sources and assessing their contributions to the quality of water produced by wells. 2. For the BLM marsh water supply well, at least two (2) groundwater samples shall be collected and analyzed for TDS, sodium, selenium, and oxygen-18 and deuterium isotopes. These analyses, and particularly the stable isotope data, can be useful for identifying partially evaporated water sources and assessing their contributions to the quality of water produced by wells. 3. The data shall be tabulated, summarized, and submitted to the CPM for review and approval. The data summary shall include the estimated range (minimum and maximum values), average, and median for each constituent analyzed. The data shall also be analyzed using the Mann-Kendall test for trend to assess whether pre-project water quality trends, if any, are statistically significant. C. Monitor. During project construction and operation, the project owner shall semi-annually monitor the quality of groundwater semiannually. The monitoring shall include: 1. Collection of groundwater samples from all monitoring network wells and analysis of these samples for TDS, chloride, nitrates, cations and anions, and oxygen-18 and deuterium isotopes. The BLM marsh water supply well shall also be analyzed for sodium and selenium. These analyses, and particularly the stable isotope data, can be useful for identifying partially evaporated water sources and assessing their contributions to the quality of water produced by wells. D. Reporting During Construction and Operation. During project construction and operation, the project owner shall submit water quality reports semi-annually to the CPM and BLM. The groundwater quality data shall be tabulated, summarized, and analyzed to compare water quality to pre-project conditions. This analysis shall include analyses of trends and for contrast with the pre-project data as follows: 1. Water quality trends shall be analyzed using the Mann-Kendall test. Trends in the data shall be compared and contrasted to pre-project trends, if any. 2. If no significant water quality trends exist in the water quality data or the data set is insufficient to		

[1] Applies only where ground disturbance is expected (trenching, replacement poles and interset poles).
[2] COC = Conditions of Certification from the CEC Final License Decision for the Abengoa Mojave Solar Plant Project.
[3] SCE maintains responsibility for implementation of environmental protection measures, design measures, and best management practices for the Lockhart Substation and SPS Project, as described in Chapter 2.0 of the EA, including the CEC Final License Decision COCs, which are applicable to the Lockhart Substation.

Environmental Protection Measures, Design Measures, BMPs, and CEC Conditions	Responsible Party	
	Mojave Solar	SCE [3]
assess trends, the water quality data shall be combined for each well and contrasted to the pre-project well water quality data set. 3. The contrast between pre-project and water quality mean or median concentrations shall be compared using an Analysis of Variance (ANOVA). A parametric ANOVA (for example, an F-test) can be conducted on the two data sets if the residuals between observed and expected values are normally distributed and have equal variance, or the data can be transformed to an approximately normal distribution. If the data cannot be represented by a normal distribution, then a nonparametric ANOVA shall be conducted (for example, the Kruskal-Wallis test). If a statistically significant difference is identified between the two data sets, the monitoring data are inconsistent with random differences between the pre-project and baseline data indicating a significant water quality impact from project pumping may be occurring. 4. If based on the water quality data the CPM and BLM determines that the quality of the water produced by the marsh water-supply well has been impacted by project pumping (exceeds pre-project constituent concentrations in TDS, chloride, nitrates, sodium, or selenium concentrations for three consecutive years) such that the water quality adversely affects the well's intended purpose, the project owner shall provide treatment or a new water supply to either meet or exceed pre-project water quality conditions. E. Monitoring Program Evaluation. After the first five-year operational and monitoring period, and every subsequent 5-year period, the CPM shall evaluate the data and determine if the groundwater quality data collection frequencies and constituent list monitored should be revised or eliminated. Revision or elimination of any monitoring program elements shall be based on the consistency of the data collected.		
Verification: The project owner shall complete the following: 1. At least sixty (60) days prior to construction, a Groundwater Quality Monitoring and Reporting Plan in compliance with Item A shall be submitted to the CPM for review and approval. 2. At least thirty (30) days prior to the start of construction, a pre-construction groundwater quality report in compliance with Item B shall be submitted to the CPM for review and approval. 3. Semi-annually, by March 31 and September 31, the project owner shall submit Groundwater Quality Reports in compliance with Item D to the CPM for review and approval and to the BLM for review. 4. After the first 5-year operational and monitoring period, and every subsequent 5-year period, the project owner shall submit a 5-year monitoring report to the CPM, for review and approval, that		

[1] Applies only where ground disturbance is expected (trenching, replacement poles and interset poles).
[2] COC = Conditions of Certification from the CEC Final License Decision for the Abengoa Mojave Solar Plant Project.
[3] SCE maintains responsibility for implementation of environmental protection measures, design measures, and best management practices for the Lockhart Substation and SPS Project, as described in Chapter 2.0 of the EA, including the CEC Final License Decision COCs, which are applicable to the Lockhart Substation.

Environmental Protection Measures, Design Measures, BMPs, and CEC Conditions	Responsible Party	
	Mojave Solar	SCE [3]
contains all groundwater quality data collected and provides a summary of the findings and a recommendation about whether the frequency of groundwater quality data collection should be revised or eliminated. 5. During the life of the project, the project owner shall provide to the CPM all monitoring reports, complaints, studies, and other relevant data within 10 days of being received by the project owner.		
SOIL&WATER-8 The project owner shall recycle and reuse all process wastewater streams to the extent practicable. Prior to transport and offsite disposal of any facility operation wastewaters that are not suitable for treatment and reuse on-site, the project owner shall test and classify the stored wastewater to determine proper management and disposal requirements. The project manager shall ensure that the wastewater is transported and disposed of in accordance with the wastewater's characteristics and classification and all applicable LORS (including any CCR Title 22 Hazardous Waste and Title 23 Waste Discharges to Land requirements).	X-COC	
Verification: Prior to transport and offsite disposal of any facility operation wastewaters that are not suitable for treatment and reuse on-site, the project owner shall test and classify the stored wastewater to determine proper management and disposal requirements. All records of this testing and classification shall be maintain at the project site. The project manager shall ensure that the wastewater is transported and disposed of in accordance with the wastewater's characteristics and classification and all applicable LORS (including any CCR Title 22 Hazardous Waste and Title 23 Waste Discharges to Land requirements).		
SOIL&WATER-9 Prior to the start of construction of the sanitary waste system, the project owner shall submit to the County of San Bernardino for review and comment, and to the CPM for review and approval, plans for the construction and operation of the project's proposed sanitary waste septic system and leach field. These plans shall comply with the requirements set forth in County of San Bernardino Code Title 3, Division 3, Chapter 8, Waste Management, Article 5, Liquid Waste Disposal and Title 6, Division 3, Chapter 3, and the Uniform Plumbing Code. Project construction shall not proceed until the CPM has approved the plans. The project owner shall remain in compliance with the San Bernardino County codes requirements for the life of the project.	X-COC	
Verification: Sixty (60) days prior to the start of commercial operations, the project owner shall submit to the County of San Bernardino appropriate fees and plans for review and comment for the construction and operation of the project's sanitary waste septic system and leach field. A copy of these plans shall be simultaneously submitted to the CPM for review and approval. The plans shall demonstrate compliance with		

[1] Applies only where ground disturbance is expected (trenching, replacement poles and interset poles).
[2] COC = Conditions of Certification from the CEC Final License Decision for the Abengoa Mojave Solar Plant Project.
[3] SCE maintains responsibility for implementation of environmental protection measures, design measures, and best management practices for the Lockhart Substation and SPS Project, as described in Chapter 2.0 of the EA, including the CEC Final License Decision COCs, which are applicable to the Lockhart Substation.

Environmental Protection Measures, Design Measures, BMPs, and CEC Conditions	Responsible Party	
	Mojave Solar	SCE [3]
the sanitary waste disposal facility requirements of County of San Bernardino Codes Title 3, Division 3, Chapter 8, Waste Management, Article 5, Liquid Waste Disposal and Title 6, Division 3, Chapter 3, and the Uniform Plumbing Code.		
SOIL&WATER-10: The Project is subject to the requirement of Title 22, Article 3, Sections 64400.80 through 64445 for a non-transient, non-community water system (serving 25 people or more for more than six months). Pursuant to this requirement, the project owner shall obtain a permit from the County of San Bernardino to operate a non-transient, non-community water system.	X-COC	
Verification: The project owner shall obtain a permit to operate a non-transient, non-community water system with the County of San Bernardino at least sixty (60) days prior to commencement of construction at the site. The project owner shall supply updates annually for all monitoring requirements and submittals to County of San Bernardino related to the permit, and proof of annual renewal of the operating permit.		
SOIL&WATER-11 As a conservation method, the project owner shall annually sequester a volume of Free Production Allowance (FPA) equal to the annual volume of groundwater pumped for the AMS project. This sequestration is subject to and defined by the following: • The project owner shall exercise all option rights indentified in the AFC and thereby acquire groundwater Base Annual Production rights totaling 10,478 AF/y. • Sequester means that the project owner retain and refrain from exercising groundwater FPA use rights which the project owner could exercise under the Mojave Basin Area Adjudication. • The project owner shall sequester annually a volume of groundwater equal to that year's volume of groundwater used for the AMS project, up to a maximum annual volume of 2,160 acre-feet. • Sequestration shall continue annually for the life of the project. • The annual sequestration of FPA is not intended to affect the Watermaster's implementation of the Mojave Basin Area Adjudication. • Sequestered water would not be considered by the Energy Commission to be produced water subject to any replacement water obligation under the Mojave Basin Area Adjudication.	X-COC	
Verification: The volume of FPA sequestered shall be documented in the Annual Compliance Report submitted to the CPM and Watermaster. This documentation shall include a table showing the annual and cumulative total FPA sequestered.		
SOIL&WATER-12 Under conditions stated below, the project owner may be required to contribute up to $50,000 annually, for the life of the AMS project, towards the Mojave Water Agency's (MWA) turf	X-COC	

[1] Applies only where ground disturbance is expected (trenching, replacement poles and interset poles).
[2] COC = Conditions of Certification from the CEC Final License Decision for the Abengoa Mojave Solar Plant Project.
[3] SCE maintains responsibility for implementation of environmental protection measures, design measures, and best management practices for the Lockhart Substation and SPS Project, as described in Chapter 2.0 of the EA, including the CEC Final License Decision COCs, which are applicable to the Lockhart Substation.

Environmental Protection Measures, Design Measures, BMPs, and CEC Conditions	Responsible Party	
	Mojave Solar	SCE [3]
replacement program, high-efficiency toilet program, or other water conservation program as approved by the CPM. This condition serves as a conservation measure. The project owner's contribution to the MWA conservation program shall be an amount necessary to conserve groundwater equal in volume to the difference between the annual AMS project's water use and annual groundwater sequestered. If the project owner demonstrates that the annual or cumulative water sequestered equals or exceeds project water use, then no contribution to the MWA conservation program is required. Within the $50,000 limit, the project owner shall ensure that the amount contributed to the water conservation program is adjusted on an annual basis to maintain the required amount of water conservation. The contribution shall be made the same month each year as established by the first year's contribution. If the project owner proposes to change or add water conservation programs that can be funded for the purposes of this condition, a plan must be provided showing which programs are proposed, how much water savings can be achieved, and how much funding is proposed. The plan shall be provided for CPM review and approval in consultation with the Mojave Water Agency prior to the proposed date of change in water conservation programs.		
Verification: The project owner shall do the following: 1. The project owner shall submit to the CPM the following documentation as part of the Annual Compliance Report: a. A copy of the receipt from the MWA for the annual contribution; and b. An accounting of the following: i. The annual and cumulative volume of groundwater used by the project in acre-feet per year; ii. The annual and cumulative volume of FPA sequestered by the project in acre-feet per year; iii. The numerical difference between annual and cumulative totals in Items i and ii above; and iv. The annual and cumulative monetary contribution and estimated annual and cumulative volume of water conserved by the project owner's contribution to MWA's turf replacement program, high-efficiency toilet program, or other water conservation program approved by the CPM. 2. If the project owner proposes to reduce the amount of the annual contribution based on the water conservation achieved through previous contributions, the project owner shall provide a plan demonstrating how the adjusted amount will ensure the water conservation program meets the requirements of this condition. The plan shall be provided for CPM review and approval 60 days prior to the annual contribution anniversary date.		

[1] Applies only where ground disturbance is expected (trenching, replacement poles and interset poles).
[2] COC = Conditions of Certification from the CEC Final License Decision for the Abengoa Mojave Solar Plant Project.
[3] SCE maintains responsibility for implementation of environmental protection measures, design measures, and best management practices for the Lockhart Substation and SPS Project, as described in Chapter 2.0 of the EA, including the CEC Final License Decision COCs, which are applicable to the Lockhart Substation.

Environmental Protection Measures, Design Measures, BMPs, and CEC Conditions	Responsible Party	
	Mojave Solar	SCE [3]
Biological Resources		
Conditions of Certification From the California Energy Commission's Final Decision		
1. **Designated Biologist Selection BIO-1:** The project owner shall assign a Designated Biologist to the project. The project owner shall submit the resume of the proposed Designated Biologist, with at least three references and contact information, to the Energy Commission Compliance Project Manager (CPM), CDFG, and USFWS for approval. The Designated Biologist must meet the following minimum qualifications: 1. Bachelor's Degree in biological sciences, zoology, botany, ecology, or a closely related field; and 2. Three years of experience in field biology or current certification of a nationally recognized biological society, such as The Ecological Society of America or The Wildlife Society; 3. At least one year of field experience with biological resources found in or near the project area; 4. Meet current USFWS Authorized Biologist criteria and demonstrate familiarity with protocols and guidelines for the desert tortoise; and 5. Possess a recovery permit for desert tortoise and a California ESA Memorandum of Understanding pursuant to Section 2081(a) for desert tortoise and Mohave ground squirrel or have adequate experience and qualifications to obtain these authorizations. It is possible that two biologists may be utilized – each with an MOU for desert tortoise or MGS. In lieu of the above requirements, the resume shall demonstrate to the satisfaction of the CPM, that the proposed Designated Biologist or alternate has the appropriate training and background to effectively implement the conditions of certification.	X-COC	X
2. **Designated Biologist Duties BIO-2** The project owner shall ensure that the Designated Biologist performs the following during any site (or related facilities) mobilization, ground disturbance, grading, construction, operation, and closure activities. The Designated Biologist may be assisted by the approved Biological Monitor(s), but remains the contact for the project owner and CPM. 1. Advise the project owner's Construction and Operation Managers on the implementation of the biological resources conditions of certification; 2. Consult on the preparation of the Biological Resources Mitigation Implementation and Monitoring Plan (BRMIMP), to be submitted by the project owner;	X-COC	X

[1] Applies only where ground disturbance is expected (trenching, replacement poles and interset poles).
[2] COC = Conditions of Certification from the CEC Final License Decision for the Abengoa Mojave Solar Plant Project.
[3] SCE maintains responsibility for implementation of environmental protection measures, design measures, and best management practices for the Lockhart Substation and SPS Project, as described in Chapter 2.0 of the EA, including the CEC Final License Decision COCs, which are applicable to the Lockhart Substation.

Environmental Protection Measures, Design Measures, BMPs, and CEC Conditions	Responsible Party	
	Mojave Solar	SCE [3]
3. Be available to supervise, conduct and coordinate mitigation, monitoring, and other biological resources compliance efforts, particularly in areas requiring avoidance or containing sensitive biological resources, such as special status species or their habitat; 4. Halt any and all activities in any area when determined that there would be an unauthorized adverse impact to biological resources if the activities continued or a violation of federal or state environmental laws or a violation of any environmental agreements/conditions made between the applicant and the CPM and/or the regulatory agencies; 5. Clearly mark sensitive biological resource areas, if present and inspect these areas at appropriate intervals for compliance with regulatory terms and conditions; 6. Inspect active construction areas where animals may have become trapped prior to construction commencing each day. At the end of the day, inspect for the installation of structures that prevent entrapment or allow escape during periods of construction inactivity. Periodically inspect areas with high vehicle activity (i.e. parking lots) for animals in harm's way; 7. Notify the project owner and the CPM of any non-compliance with any biological resources condition of certification; 8. Respond directly to inquiries of the CPM regarding biological resource issues; 9. Maintain written records of the tasks specified above and those included in the BRMIMP. Summaries of these records shall be submitted in the Monthly Compliance Report and the Annual Report; and 10. Train the Biological Monitors as appropriate, and ensure their familiarity with the BRMIMP, Worker Environmental Awareness Program (WEAP) training and all permits.		
3. **Biological Monitor Selection, Qualifications, and Duties BIO-3** The project owner's CPM-approved Designated Biologist shall submit the resume, at least three references and contact information, of the proposed Biological Monitors to the CPM, CDFG, and USFWS for approval. The resume shall demonstrate to the satisfaction of the CPM, the appropriate education and experience to accomplish the assigned biological resource tasks, including: • Biological Monitor(s) involved in any aspect of desert tortoise surveys or handling must meet the criteria to be considered a USFWS Authorized Biologist (USFWS 2008) and demonstrate familiarity with the most recent protocols and guidelines for the desert tortoise. • Biological Monitor(s) involved in any aspect of Mohave ground squirrel surveys or handling must	X-COC	X

[1] Applies only where ground disturbance is expected (trenching, replacement poles and interset poles).
[2] COC = Conditions of Certification from the CEC Final License Decision for the Abengoa Mojave Solar Plant Project.
[3] SCE maintains responsibility for implementation of environmental protection measures, design measures, and best management practices for the Lockhart Substation and SPS Project, as described in Chapter 2.0 of the EA, including the CEC Final License Decision COCs, which are applicable to the Lockhart Substation.

Environmental Protection Measures, Design Measures, BMPs, and CEC Conditions	Responsible Party	
	Mojave Solar	SCE [3]
possess a California ESA Memorandum of Understanding pursuant to Section 2081(a) for Mohave ground squirrel or have adequate experience and qualifications to obtain this authorizations. • Biological Monitor(s) training by the Designated Biologist shall include familiarity with the conditions of certification and the Biological Resources Mitigation Implementation and Monitoring Plan (BRMIMP), Worker Environmental Awareness Program (WEAP), and all permits. • The Biological Monitors shall assist the Designated Biologist in conducting surveys and in monitoring of site mobilization activities, construction-related ground disturbance, grading, boring or trenching. The Designated Biologist shall remain the contact for the Project owner, BLM's Authorized Officer and the CPM.		
4. **Designated Biologist and Biological Monitor Authority BIO-4** The project owner's Construction/Operation Manager shall act on the advice of the Designated Biologist and Biological Monitor(s) to ensure conformance with the biological resources conditions of certification. If required by the Designated Biologist and Biological Monitor(s) the project owner's Construction/Operation Manager shall halt all site mobilization, ground disturbance, grading, construction, and operation activities in areas specified by the Designated Biologist. The Designated Biologist shall: 1. Halt any and all activities in any area when determined that there would be an unauthorized adverse impact to biological resources if the activities continued or a violation of federal or state environmental laws or a violation of any environmental agreements/conditions made between the applicant and the CPM and/or the regulatory agencies; 2. Inform the project owner and the Construction/Operation Manager when to resume activities; and 3. Notify the CPM if there is a halt of any activities, and advise the CPM of any corrective actions that have been taken, or will be instituted, as a result of the work stoppage. 4. If the Designated Biologist is unavailable for direct consultation, the Biological Monitor shall act on behalf of the Designated Biologist. It is expected that the Designated Biologist will be onsite during construction or otherwise available by phone.	X-COC	X
5. **Worker Environmental Awareness Program BIO-5** The project owner shall develop and implement a CPM-approved Worker Environmental Awareness Program (WEAP) in which each of its employees,	X-COC	X

[1] Applies only where ground disturbance is expected (trenching, replacement poles and interset poles).
[2] COC = Conditions of Certification from the CEC Final License Decision for the Abengoa Mojave Solar Plant Project.
[3] SCE maintains responsibility for implementation of environmental protection measures, design measures, and best management practices for the Lockhart Substation and SPS Project, as described in Chapter 2.0 of the EA, including the CEC Final License Decision COCs, which are applicable to the Lockhart Substation.

Environmental Protection Measures, Design Measures, BMPs, and CEC Conditions	Responsible Party	
	Mojave Solar	SCE [3]
as well as employees of contractors and subcontractors who work on the project site or any related facilities during site mobilization, ground disturbance, grading, construction, operation, and closure are informed about sensitive biological resources associated with the project. The WEAP must: 1. Be developed by or in consultation with the Designated Biologist and consist of an on-site or training center presentation in which supporting written material and electronic media is made available to all participants; 2. Discuss the locations and types of sensitive biological resources on the project site and adjacent areas, if present; 3. Present the reasons for protecting these resources; 4. Present the meaning of various temporary and permanent habitat protection measures as necessary; 5. Discuss penalties for violation of applicable LORS (e.g., federal and state endangered species acts); 6. Identify whom to contact if there are further comments and questions about the material discussed in the program; and 7. Include a training acknowledgment form to be signed by each worker indicating that they received training and shall abide by the guidelines. The specific program can be administered by a competent individual(s) acceptable to the Designated Biologist.		
6. **Biological Resources Mitigation Implementation and Monitoring Plan (BRMIMP) Development and Compliance BIO-6** The project owner shall develop a BRMIMP and submit two copies of the proposed BRMIMP to the CPM (for review and approval) and to CDFG and USFWS (for review and comment) if applicable and shall implement the measures identified in the approved BRMIMP. A copy of the BRMIMP shall be kept onsite and made readily available to biologists, regulatory agencies, the project owner, contractors, and subcontractors as needed. The BRMIMP shall be prepared in consultation with the Designated Biologist and shall identify: 1. All biological resource mitigation, monitoring, and compliance measures proposed and agreed to by the project owner; 2. All applicant-proposed mitigation measures presented in the Application for Certification, data request responses, and workshop responses;	X-COC	X

[1] Applies only where ground disturbance is expected (trenching, replacement poles and interset poles).
[2] COC = Conditions of Certification from the CEC Final License Decision for the Abengoa Mojave Solar Plant Project.
[3] SCE maintains responsibility for implementation of environmental protection measures, design measures, and best management practices for the Lockhart Substation and SPS Project, as described in Chapter 2.0 of the EA, including the CEC Final License Decision COCs, which are applicable to the Lockhart Substation.

Environmental Protection Measures, Design Measures, BMPs, and CEC Conditions	Responsible Party	
	Mojave Solar	SCE [3]
3. All biological resource conditions of certification identified as necessary to avoid or mitigate impacts; 4. All biological resource mitigation, monitoring, and compliance measures required in federal agency terms and conditions, such as those provided in the Biological Opinion; 5. All biological resource mitigation, monitoring, and compliance measures required in local agency permits, such as site grading and landscaping requirements; 6. All sensitive biological resources to be impacted, avoided, or mitigated by project construction, operation, and closure; 7. All required mitigation measures for each sensitive biological resource; 8. A detailed description of measures that shall be taken to avoid or mitigate temporary disturbances from construction activities; 9. All locations on a map, at an approved scale, of sensitive biological resource areas subject to disturbance and areas requiring temporary protection and avoidance during construction; 10. Aerial photographs, at an approved scale, of all areas to be disturbed during project construction activities — one set prior to any site (and related facilities) mobilization disturbance and one set subsequent to completion of project construction. Include planned timing of aerial photography and a description of why times were chosen; 11. Duration for each type of monitoring and a description of monitoring methodologies and frequency; 12. Performance standards to be used to help decide if/when proposed mitigation is or is not successful; 13. All performance standards and remedial measures to be implemented if performance standards are not met; 14. A preliminary discussion of biological resources-related facility closure measures; and 15. A process for proposing plan modifications to the CPM and appropriate agencies for review and approval.		
7. **Impact Avoidance and Minimization Measures BIO-7** The project owner shall implement the following measures during construction and operation to manage their project site and related facilities in a manner to avoid or minimize impacts to the local biological resources: 1. Limit Disturbance Area. The boundaries of all areas to be temporarily or permanently disturbed (including staging areas, access roads, and sites for temporary placement of spoils)	X-COC	X

[1] Applies only where ground disturbance is expected (trenching, replacement poles and interset poles).
[2] COC = Conditions of Certification from the CEC Final License Decision for the Abengoa Mojave Solar Plant Project.
[3] SCE maintains responsibility for implementation of environmental protection measures, design measures, and best management practices for the Lockhart Substation and SPS Project, as described in Chapter 2.0 of the EA, including the CEC Final License Decision COCs, which are applicable to the Lockhart Substation.

Environmental Protection Measures, Design Measures, BMPs, and CEC Conditions	Responsible Party	
	Mojave Solar	SCE [3]
shall be delineated with stakes and flagging prior to construction activities in consultation with the Designated Biologist. Spoils shall be stockpiled in disturbed areas, which do not provide habitat for special-status species. Parking areas, staging and disposal site locations shall similarly be located in areas without native vegetation or special-status species habitat. All disturbances, vehicles, and equipment shall be confined to the flagged areas. 2. Minimize Road Impacts. New and existing roads that are planned for construction, widening, or other improvements shall not extend beyond the flagged impact area as described above. All vehicles passing or turning around will do so within the planned impact area or in previously disturbed areas. Where new access is required outside of existing roads (e.g., new spur roads) or the construction zone, the route will be clearly marked (i.e., flagged and/or staked) prior to the onset of construction. 3. Minimize Traffic Impacts. Vehicular traffic during project construction and operation shall be confined to existing routes of travel to and from the project site, and cross country vehicle and equipment use outside designated work areas shall be prohibited. The speed limit shall not exceed 25 miles per hour on Harper Lake Road and within fenced areas that have been cleared of tortoises and other wildlife. The speed limit shall not exceed 15 miles per hour within unfenced areas and secondary unpaved access roads. 4. Monitor During Construction. The Designated Biologist or Biological Monitor shall be present at the construction site during all project activities that have potential to disturb soil, vegetation, and wildlife. The USFWS-approved Designated Biologist or Biological Monitor shall closely monitor vegetation removal and grading activities to prevent wildlife injury or mortality. 5. Minimize Impacts of Transmission/Pipeline Alignments, Roads, Staging Areas. Staging areas for construction on the plant site shall be within the area that has been fenced with desert tortoise exclusion fencing and cleared. Temporary disturbance areas, if necessary, shall occur within the project site and shall be designed, installed, and maintained with the goal of minimizing disturbance. Transmission lines and all electrical components shall be designed, installed, and maintained in accordance with the Avian Power Line Interaction Committee's (APLIC's) *Suggested Practices for Avian Protection on Power Lines* (APLIC 2006) and *Mitigating Bird Collisions with Power Lines* (APLIC 2004) to reduce the likelihood of bird electrocutions and collisions.		

[1] Applies only where ground disturbance is expected (trenching, replacement poles and interset poles).
[2] COC = Conditions of Certification from the CEC Final License Decision for the Abengoa Mojave Solar Plant Project.
[3] SCE maintains responsibility for implementation of environmental protection measures, design measures, and best management practices for the Lockhart Substation and SPS Project, as described in Chapter 2.0 of the EA, including the CEC Final License Decision COCs, which are applicable to the Lockhart Substation.

Environmental Protection Measures, Design Measures, BMPs, and CEC Conditions	Responsible Party	
	Mojave Solar	SCE [3]
6. Avoid Use of Toxic Substances. Road surfacing and sealants as well as soil bonding and weighting agents used on unpaved surfaces shall be non-toxic to wildlife and plants. 7. Minimize Lighting Impacts. Facility lighting shall be designed, installed, and maintained to prevent side casting of light towards the project boundaries and the Harper Dry Lake marsh. Lighting shall be shielded, directional, and at the lowest intensity required for activity. 8. Avoid Vehicle Impacts to Desert Tortoise. Parking and storage shall occur within desert tortoise exclusion fencing to the extent feasible. No vehicles or construction equipment parked outside the fenced area shall be moved prior to an inspection of the ground beneath the vehicle for the presence of desert tortoise. During construction, a Biological Monitor shall drive along project access roads, particularly Harper Lake Road at least every three hours during the desert tortoise active period (April through May and September through October) looking for desert tortoise or other vulnerable wildlife within the roadway. Outside of the active period, roads shall be monitored at least twice a day in advance of peak AM and PM traffic periods. During operation, employees shall report any desert tortoise sightings along roadways to the Biological Monitor. If a desert tortoise is observed in the roadway or beneath a parked vehicle, it will be left to move on its own or a Biological Monitor may remove and transfer the animal to a safe location if temperatures are within the appropriate range as identified in the Final Desert Tortoise Clearing and Translocation Plan. 9. Avoid Wildlife Pitfalls. At the end of each work day, the Designated Biologist shall ensure that all potential wildlife pitfalls (trenches, bores, and other excavations) outside the permanently fenced area have been backfilled. If backfilling is not feasible, all trenches, bores, and other excavations shall be sloped at a 3:1 ratio at the ends to provide wildlife escape ramps, or covered completely to prevent wildlife access, or fully enclosed with tortoise-exclusion fencing. All trenches, bores, and other excavations outside the areas permanently fenced with desert tortoise exclusion fencing shall be inspected at the beginning of each workday, periodically throughout, and at the end of each workday by the Designated Biologist or a Biological Monitor. Should a tortoise or other wildlife become trapped, the Designated Biologist or Biological Monitor shall remove and relocate the individual to a safe location. Any wildlife encountered during the course of construction shall be allowed to leave the construction area unharmed. 10. Avoid Entrapment of Wildlife. Any construction pipe, culvert, or similar structure with a		

[1] Applies only where ground disturbance is expected (trenching, replacement poles and interset poles).
[2] COC = Conditions of Certification from the CEC Final License Decision for the Abengoa Mojave Solar Plant Project.
[3] SCE maintains responsibility for implementation of environmental protection measures, design measures, and best management practices for the Lockhart Substation and SPS Project, as described in Chapter 2.0 of the EA, including the CEC Final License Decision COCs, which are applicable to the Lockhart Substation.

Environmental Protection Measures, Design Measures, BMPs, and CEC Conditions	Responsible Party	
	Mojave Solar	SCE [3]
diameter greater than three inches, stored less than eight inches above ground for one or more days/nights, shall be inspected for wildlife before the material is moved, buried, or capped. As an alternative, all such structures may be capped before being stored, or placed on pipe racks. 11. Report Wildlife Injury and Mortality. All inadvertent deaths of sensitive species, including road kill, shall be reported to the appropriate project representative. Species name, physical characteristics of the animal (sex, age class, length, weight), and other pertinent information shall be noted and reported in the Monthly Compliance Reports. Injured animals shall be reported to CDFG or USFWS and the CPM and the project owner shall follow instructions that are provided by CDFG or USFWS. If CDFG or USFWS cannot be immediately reached, consideration should be given to taking the animal to a veterinary hospital. If any golden eagles are recovered dead, they shall be sent to the National Eagle Repository after cause of death has been investigated. 12. Minimize Standing Water. Water applied to dirt roads and construction areas (trenches or spoil piles) for dust abatement shall use the minimal amount needed to meet safety and air quality standards in an effort to prevent the formation of puddles, which could attract desert tortoises, common ravens, and other wildlife to construction sites. A Biological Monitor shall patrol these areas to ensure water does not puddle and attract desert tortoise, common ravens, and other wildlife to the site and shall take appropriate action to reduce water application where necessary. 13. Minimize Spills of Hazardous Materials. All vehicles and equipment shall be maintained in proper working condition to minimize the potential for fugitive emissions of motor oil, antifreeze, hydraulic fluid, grease, or other hazardous materials. The Designated Biologist shall be informed of any hazardous spills immediately as directed in the project Hazardous Materials Plan. Hazardous spills shall be cleaned up immediately and the contaminated soil properly disposed of at a licensed facility. Servicing of construction equipment shall take place only at a designated area. Service/maintenance vehicles shall carry a bucket and pads to absorb leaks or spills. 14. Worker Guidelines. During construction all trash and food-related waste shall be placed in self-closing containers and removed daily from the site. Workers shall not feed wildlife or bring pets to the project site. Except for law enforcement personnel, no workers or visitors to the		

[1] Applies only where ground disturbance is expected (trenching, replacement poles and interset poles).
[2] COC = Conditions of Certification from the CEC Final License Decision for the Abengoa Mojave Solar Plant Project.
[3] SCE maintains responsibility for implementation of environmental protection measures, design measures, and best management practices for the Lockhart Substation and SPS Project, as described in Chapter 2.0 of the EA, including the CEC Final License Decision COCs, which are applicable to the Lockhart Substation.

Environmental Protection Measures, Design Measures, BMPs, and CEC Conditions	Responsible Party	
	Mojave Solar	SCE [3]
site shall bring firearms or weapons. 15. Avoid Spread of Noxious Weeds. The project owner shall implement the following Best Management Practices during construction and operation to prevent the spread and propagation of noxious weeds: a. Limit the size of any vegetation and/or ground disturbance to the absolute minimum and limit ingress and egress to defined routes; b. Reestablish vegetation quickly on disturbed sites temporarily disturbed areas, including pipelines, transmission lines, and staging areas (see BIO-9); c. Prevent spread of non-native plants via vehicular sources by implementing Trackclean™ or other methods of vehicle cleaning for vehicles coming and going from construction sites. Earth-moving equipment and construction vehicles shall be cleaned within an approved area or commercial facility prior to transport to the construction site. The number of cleaning stations shall be limited and weed control/herbicide application shall be used at the cleaning station(s); d. Use only weed-free straw, hay bales, and seed for erosion control and sediment barrier installations; e. Invasive non-native species shall not be used in landscaping plans and erosion control; and f. Monitor and rapidly implement control measures to ensure early detection and eradication of weed invasions. 16. Implement Erosion Control Measures. Standard erosion control measures shall be implemented for all phases of construction and operation. All disturbed soils and roads within the project site shall be stabilized to reduce erosion potential, both during and following construction. Areas of disturbed soils (access and staging areas) with slopes toward an ephemeral drainage or Harper Dry Lake shall be stabilized to reduce erosion potential. 17. Monitor Ground Disturbing Activities Prior to Site Mobilization. If ground disturbing activities are required prior to site mobilization, such as for geotechnical borings or hazardous waste evaluations, a Designated Biologist or Biological Monitor shall be present to monitor any actions that could disturb soil, vegetation, or wildlife. Actions not included in the project description are prohibited.		

[1] Applies only where ground disturbance is expected (trenching, replacement poles and interset poles).
[2] COC = Conditions of Certification from the CEC Final License Decision for the Abengoa Mojave Solar Plant Project.
[3] SCE maintains responsibility for implementation of environmental protection measures, design measures, and best management practices for the Lockhart Substation and SPS Project, as described in Chapter 2.0 of the EA, including the CEC Final License Decision COCs, which are applicable to the Lockhart Substation.

Environmental Protection Measures, Design Measures, BMPs, and CEC Conditions	Responsible Party	
	Mojave Solar	SCE [3]
8. **Pre-Construction Nest Surveys and Impact Avoidance and Minimization Measures for Migratory Birds BIO-8** Pre-construction nest surveys shall be conducted if construction activities will occur from February 1 through August 1. At all times of the year, noise generating activities shall be limited during early morning and evening to avoid impacts to birds protected under the Migratory Bird Treaty Act. The Designated Biologist or Biological Monitor shall perform surveys in accordance with the following guidelines: 1. Surveys shall cover all potential nesting habitat in the project site and within 500 feet of the boundaries of the plant site as well as any areas potentially exposed to noise levels above 60 dBA; 2. At least two pre-construction surveys shall be conducted, separated by a minimum 10-day interval. One of the surveys needs to be conducted within the 10-day period preceding initiation of construction activity. Additional follow-up surveys may be required if periods of construction inactivity exceed three weeks in any given area, an interval during which birds may establish a nesting territory and initiate egg laying and incubation; 3. If active nests are detected during the survey, a no-disturbance buffer zone (protected area surrounding the nest, the size of which is to be determined by the Designated Biologist in consultation with CDFG and USFWS) and monitoring plan shall be developed. Nest locations shall be mapped using GPS technology and submitted, along with a weekly report stating the survey results, to the CPM; and 4. The Designated Biologist or Biological Monitor shall monitor the nest until he or she determines that nestlings have fledged and dispersed; activities that might, in the opinion of the Designated Biologist in consultation with the CPM, disturb nesting activities (e.g., excessive noise above 60 dBA), shall be prohibited within the buffer zone until such a determination is made.	X-COC	X
9. **Golden Eagle Territory-Specific Management Plan BIO-9** In addition to the breeding season golden eagle inventory conducted in spring 2010 (per USFWS protocol [Pagel et al. 2010]), a non-breeding season golden eagle inventory survey shall be conducted in late-summer/early-winter 2010 (USFWS, in prep). If an occupied golden eagle territory is identified within 10 miles of the project site (except for the territory identified at Black Mountain in April 2010) during breeding or non-breeding inventory surveys for the AMS project, the project owner shall prepare and implement a Golden Eagle	X-COC	

[1] Applies only where ground disturbance is expected (trenching, replacement poles and interset poles).
[2] COC = Conditions of Certification from the CEC Final License Decision for the Abengoa Mojave Solar Plant Project.
[3] SCE maintains responsibility for implementation of environmental protection measures, design measures, and best management practices for the Lockhart Substation and SPS Project, as described in Chapter 2.0 of the EA, including the CEC Final License Decision COCs, which are applicable to the Lockhart Substation.

Environmental Protection Measures, Design Measures, BMPs, and CEC Conditions	Responsible Party	
	Mojave Solar	SCE [3]
Territory-Specific Management Plan. This plan shall: 1. Include measures to avoid and minimize disturbance (as defined in 50 CFR 22.3) to golden eagles during project construction and operation activities. Measures may include limited operating periods or no-disturbance buffers within which certain potentially disruptive project activities shall not be conducted, or modification of certain project activities to reduce the potential for disturbance to eagles. 2. Identify monitoring actions and schedule for their implementation to ensure avoidance and minimization of disturbance. Monitoring and reporting shall be conducted pre- and post-activity per Interim Golden Eagle Inventory and Monitoring Protocols (Pagel et al. 2010).		
10. **Documentation of Bald and Golden Eagle Act Compliance BIO-10** The project owner shall provide documentation to the CPM that the project is in compliance with the Bald and Golden Eagle Protection Act (Title 16, United States Code, sections 668-668d).	X-COC	
11. **Desert Tortoise Exclusion Fencing, Clearance Surveys, and Translocation Plan BIO-11** A Desert Tortoise Exclusion Fencing, Clearance Surveys, and Translocation Plan (Desert Tortoise Plan) shall be developed in consultation with the CPM, CDFG, and USFWS. This plan shall include detailed measures to avoid and minimize impacts to desert tortoise in and near the construction areas as well as methods for clearance surveys, fence installation, tortoise handling, artificial burrow construction, egg handling and other procedures, which shall be consistent with those described in the USFWS Desert Tortoise Field Manual (www.fws.gov/ventura/speciesinfo/protocols_guidelines) or more current guidance provided by CDFG and USFWS. At a minimum, the following measures shall be included in the plan and implemented by the project owner to manage their construction site, and related facilities, in a manner to avoid, minimize, or mitigate impacts to desert tortoise. 1. <u>Fence Installation.</u> Prior to ground disturbance, the entire project site shall be fenced with desert tortoise exclusion fence. To avoid impacts to desert tortoise during fence construction, the proposed fence alignment shall be flagged and the alignment surveyed within 24 hours prior to fence construction. Surveys shall be conducted by the Designated Biologist using techniques approved by the USFWS and CDFG. Biological Monitors may assist the Designated Biologist under his or her supervision. These surveys shall provide 100% coverage of all areas to be disturbed during fence construction and an additional transect along both sides of the proposed fence line. This fence line transect shall cover an area approximately 90 feet wide centered on the fence alignment. Transects shall be no greater	X-COC	X

[1] Applies only where ground disturbance is expected (trenching, replacement poles and interset poles).
[2] COC = Conditions of Certification from the CEC Final License Decision for the Abengoa Mojave Solar Plant Project.
[3] SCE maintains responsibility for implementation of environmental protection measures, design measures, and best management practices for the Lockhart Substation and SPS Project, as described in Chapter 2.0 of the EA, including the CEC Final License Decision COCs, which are applicable to the Lockhart Substation.

Environmental Protection Measures, Design Measures, BMPs, and CEC Conditions	Responsible Party	
	Mojave Solar	SCE [3]
than 30 feet apart. All desert tortoise burrows, and burrows constructed by other species that might be used by desert tortoises, shall be examined to assess occupancy of each burrow by desert tortoises and handled in accordance with USFWS-approved protocol. A. Timing and Supervision of Fence Installation. The exclusion fencing shall be installed prior to site clearing and grubbing. The fence installation shall be supervised by the Designated Biologist and monitored by the Biological Monitors to ensure the safety of any tortoise present. B. Fence Material and Installation. The permanent tortoise exclusionary fencing shall consist of galvanized hard wire cloth 1 by 2 inch mesh sunk 12 inches into the ground, and 24 inches above ground (refer to parameters for USFWS-approved tortoise exclusion fencing at www.fws.gov/ventura/speciesinfo/protocols_guidelines). For temporary exclusion fencing, a “folded bottom” technique shall be implemented. This method follows the same guidelines as installation of permanent fencing except instead of burying the bottom 12 inches of the fencing, it is bent at a approximately 90 degree angle (to follow the contour of the ground) and spikes or other retaining methods are driven into the ground every two linear feet in such a manner as to “anchor” the bottom of the fence. This method eliminates the need for trenching, which for short-term temporary impacts may be more beneficial to the recovery of the landscape, and thus the species. C. Security Gates. Security gates shall be designed with minimal ground clearance to deter ingress by tortoises. The gates shall remain closed except during vehicle passage and may be electronically activated to open and close immediately after vehicle(s) have entered or exited to prevent extended periods with open gates, which might lead to a tortoise entering. D. Stormwater Drainage Fencing. The onsite stormwater drainage channels, including the headwalls, outlet, and road crossings, shall be permanently fenced to ensure exclusion of desert tortoise during AMS operation. E. Fence Inspections. Following installation of the desert tortoise exclusion fencing for the permanent site and stormwater drainage fencing and temporary fencing (if required), the fencing shall be regularly inspected. Permanent fencing shall be inspected monthly and during/immediately following all major rainfall events. Any damage to the fencing shall be		

[1] Applies only where ground disturbance is expected (trenching, replacement poles and interset poles).
[2] COC = Conditions of Certification from the CEC Final License Decision for the Abengoa Mojave Solar Plant Project.
[3] SCE maintains responsibility for implementation of environmental protection measures, design measures, and best management practices for the Lockhart Substation and SPS Project, as described in Chapter 2.0 of the EA, including the CEC Final License Decision COCs, which are applicable to the Lockhart Substation.

Environmental Protection Measures, Design Measures, BMPs, and CEC Conditions	Responsible Party	
	Mojave Solar	SCE [3]
temporarily repaired immediately to keep tortoises out of the site, and permanently repaired within two days of observing damage. Inspections of permanent site fencing shall occur for the life of the project. Temporary fencing must be inspected immediately following major rainfall events. All temporary fencing shall be repaired immediately upon discovery and, if the fence may have permitted tortoise entry while damaged, the Designated Biologist shall inspect the area enclosed by the fence for tortoise. 2. Desert Tortoise Clearance Surveys. Following construction of the tortoise exclusionary fencing around the Plant Site, all fenced areas shall be cleared of tortoises by the Designated Biologist, who may be assisted by Biological Monitors. A minimum of two, 100 percent coverage protocol clearance surveys with negative results must be completed and these must coincide with heightened desert tortoise activity from April through May and September through October. Non-protocol clearance surveys may be conducted in areas of certainly unsuitable habitat (e.g., developed) with prior approval of specific areas by USFWS and CDFG (these proposed areas shall be identified in the draft Desert Tortoise Plan). Clearance survey transects shall be followed as described in the Final Desert Tortoise plan. Additional clearance survey guidelines area provided in the USFWS *Desert Tortoise Field Manual* (www.fws.gov/ventura/speciesinfo/protocols_guidelines). Translocation of Desert Tortoise. If desert tortoises are detected during clearance surveys within the project impact area, the Designated Biologist shall safely translocate the tortoise the shortest possible distance to the nearest suitable habitat. Any handling efforts shall be in accordance with techniques described in the final Desert Tortoise Plan, which shall be consistent with the USFWS *Desert Tortoise Field Manual* (www.fws.gov/ventura/speciesinfo/protocols_guidelines). If a visibly diseased tortoise is encountered onsite, procedures shall be implemented in accordance with the approved final Desert Tortoise Plan. 3. Burrow Inspection. All potential desert tortoise burrows within the fenced area shall be searched for presence. To prevent reentry by a tortoise or other wildlife, all burrows shall be collapsed once absence has been determined, in accordance with the final Desert Tortoise Plan. Immediately following excavation and if environmental conditions warrant immediate translocation, tortoises excavated from burrows shall be translocated to unoccupied natural or artificial burrows within the location approved by USFWS and CDFG per the final Desert		

[1] Applies only where ground disturbance is expected (trenching, replacement poles and interset poles).
[2] COC = Conditions of Certification from the CEC Final License Decision for the Abengoa Mojave Solar Plant Project.
[3] SCE maintains responsibility for implementation of environmental protection measures, design measures, and best management practices for the Lockhart Substation and SPS Project, as described in Chapter 2.0 of the EA, including the CEC Final License Decision COCs, which are applicable to the Lockhart Substation.

Environmental Protection Measures, Design Measures, BMPs, and CEC Conditions	Responsible Party	
	Mojave Solar	SCE [3]
Tortoise Plan. 4. Burrow Excavation. Burrows inhabited by tortoises shall be excavated by the Designated Biologist using hand tools, and then collapsed or blocked to prevent re-occupation, in accordance with the final Desert Tortoise Plan. If excavated during May through July, the Designated Biologist shall search for desert tortoise nests/eggs. All desert tortoise handling and removal, and burrow excavations, including nests, shall be conducted by the Designated Biologist in accordance with the USFWS *Desert Tortoise Field Manual* (www.fws.gov/ventura/speciesinfo/protocols_guidelines). 5. Monitoring During Clearing. Following the installation of exclusionary fencing and after ensuring desert tortoises are absent from the project site, heavy equipment shall be allowed to enter the project site to perform earth work such as clearing, grubbing, leveling, and trenching. A Biological Monitor shall be onsite at all times during initial clearing and grading activities. Should a tortoise be discovered, it shall be relocated as described above in accordance with the final Desert Tortoise Plan. 6. Reporting. The Designated Biologist shall record the following information for any desert tortoises handled: a) the locations (narrative and maps) and dates of observation; b) general condition and health, including injuries, state of healing and whether desert tortoise voided their bladders; c) location moved from and location moved to (using GPS technology); d) gender, carapace length, and diagnostic markings (i.e., identification numbers or marked lateral scutes); e) ambient temperature when handled and released; and f) digital photograph of each handled desert tortoise as described in the paragraph below. Desert tortoise moved from within project areas shall be marked for future identification as described in USFWS *Desert Tortoise Field Manual* (www.fws.gov/ventura/speciesinfo/protocols_guidelines). Digital photographs of the carapace, plastron, and fourth costal scute shall be taken. Scutes shall not be notched for identification.		
12. **Mohave Ground Squirrel Clearance Surveys BIO-12** The project owner shall implement the following measures to manage their construction site, and related facilities, in a manner to avoid or minimize impacts to Mohave ground squirrels (MGS): 1. Clearance Survey. After the installation of the desert tortoise exclusion fence and immediately prior to any ground disturbance, the Designated Biologist(s) shall examine the construction	X-COC	X

[1] Applies only where ground disturbance is expected (trenching, replacement poles and interset poles).
[2] COC = Conditions of Certification from the CEC Final License Decision for the Abengoa Mojave Solar Plant Project.
[3] SCE maintains responsibility for implementation of environmental protection measures, design measures, and best management practices for the Lockhart Substation and SPS Project, as described in Chapter 2.0 of the EA, including the CEC Final License Decision COCs, which are applicable to the Lockhart Substation.

Environmental Protection Measures, Design Measures, BMPs, and CEC Conditions	Responsible Party	
	Mojave Solar	SCE [3]
disturbance area for MGS and their burrows. The survey shall provide 100 percent coverage of suitable habitat within the project site (undisturbed desert saltbush scrub, disturbed desert saltbush scrub, disturbed desert saltbush scrub regrowth, fallow agriculture-saltbush scrub regrowth). A. If potentially occupied burrows are identified, an attempt shall be made to trap and relocate the individual(s). Potentially occupied burrows shall be fully excavated by hand. B. Trapping, relocation, and MGS burrow excavation shall only be conducted by individual(s) possessing an MOU with CDFG for such activities. 2. Records of Capture. If MGS are captured via trapping or burrow excavation, the Designated Biologist shall maintain a record of each Mohave ground squirrels handled, including: a) the locations (Global Positioning System [GPS] coordinates and maps) and time of capture and/or observation as well as release; b) sex; c) approximate age (adult/juvenile); d) weight; e) general condition and health, noting all visible conditions including gait and behavior, diarrhea, emaciation, salivation, hair loss, ectoparasites, and injuries; and f) ambient temperature when handled and released. 3. Relocation. Any MGS captured via trapping or burrow excavation shall be relocated to suitable habitat adjacent to the project site, which provides conditions suitable for the long-term survival of relocated MGS.		
13. **Burrowing Owl Impact Avoidance, Minimization and Mitigation Measures BIO-13** Prior to preconstruction surveys, a Burrowing Owl Monitoring and Mitigation Plan (Burrowing Owl Plan) shall be developed by the project owner in consultation with the CPM and CDFG. This plan shall include detailed measures to avoid and minimize impacts to burrowing owls in and near the construction areas (if indentified during surveys) and shall be consistent with CDFG guidance (CDFG 1995). In addition, the plan shall identify the optimal time to concurrently relocate both desert tortoise and burrowing owl. At a minimum, the following measures shall be included in the plan and implemented by the project owner to manage their construction site, and related facilities, in a manner to avoid, minimize, or mitigate impacts to breeding and foraging burrowing owls. 1. Pre-Construction Surveys and Nest Avoidance. The Designated Biologist shall conduct pre-construction surveys for burrowing owls within the project site and a 160-foot buffer. These surveys shall be conducted concurrent with desert tortoise clearance surveys, to the	X-COC	X

[1] Applies only where ground disturbance is expected (trenching, replacement poles and interset poles).
[2] COC = Conditions of Certification from the CEC Final License Decision for the Abengoa Mojave Solar Plant Project.
[3] SCE maintains responsibility for implementation of environmental protection measures, design measures, and best management practices for the Lockhart Substation and SPS Project, as described in Chapter 2.0 of the EA, including the CEC Final License Decision COCs, which are applicable to the Lockhart Substation.

Environmental Protection Measures, Design Measures, BMPs, and CEC Conditions	Responsible Party	
	Mojave Solar	SCE [3]
maximum extent possible. The following shall be included in the Plan and implemented to avoid and minimize impacts to burrowing owls onsite: A. Pre-construction surveys shall be conducted prior to the nesting season (February 1 through August 31) and all burrowing owls will be passively relocated using one-way trap doors. Once the Designated Biologist has verified that all burrowing owls have vacated an occupied burrow, the Designated Biologist shall collapse the burrow, preventing re-occupation. B. If ground disturbance cannot be avoided in areas where nesting burrowing owls are active, a 250-foot exclusion area around occupied burrows will be flagged and this area will not be disturbed during the nesting season (February 1 through August 31) unless a qualified biologist verifies through non-invasive methods that either: (1) the birds have not begun egg-laying and incubation; or (2) that juveniles from the occupied burrows are foraging independently and are capable of independent survival. The exclusion area shall remain connected to natural area(s) to the extent possible, to avoid completely surrounding the owl with construction activities and/or equipment. 2. Artificial Burrow Installation. Prior to any ground-disturbing activities, the project owner shall install five artificial burrows for each identified burrowing owl burrow in the project area that would be destroyed, within in the approved compensatory habitat area. The Designated Biologist shall survey the site selected for artificial burrow construction to verify that such construction will not affect desert tortoise or Mohave ground squirrel or existing burrowing owl colonies in the relocation area. Installation of the artificial burrows shall occur after baseline surveys of the relocation area and prior to ground disturbance or heavy equipment staging. Design of the artificial burrows shall be consistent with CDFG guidelines (CDFG 1995) and shall be approved by the CPM in consultation with CDFG. 3. Passive Relocation. Prior to passive relocation, any owls that will be relocated shall be color banded with air-craft aluminum bands in accordance with the guidance provided by USGS bird banding lab (http://www.pwrc.usgs.gov/bbl) to monitor relocation success. Color banding shall not be conducted during the breeding season. During the non-breeding season, owls would be given a minimum of three weeks to become familiar with the new artificial burrows, after which eviction of owls within the project site could begin. Use of one-way doors described by Trulio (1995) and Clark and Plumpton (2005) would be used to facilitate passive		

[1] Applies only where ground disturbance is expected (trenching, replacement poles and interset poles).
[2] COC = Conditions of Certification from the CEC Final License Decision for the Abengoa Mojave Solar Plant Project.
[3] SCE maintains responsibility for implementation of environmental protection measures, design measures, and best management practices for the Lockhart Substation and SPS Project, as described in Chapter 2.0 of the EA, including the CEC Final License Decision COCs, which are applicable to the Lockhart Substation.

Environmental Protection Measures, Design Measures, BMPs, and CEC Conditions	Responsible Party	
	Mojave Solar	SCE [3]
relocation of owls. A. Monitoring and Success Criteria. The Designated Biologist shall survey the compensatory mitigation area and a suitable habitat within a 600 meter radius from the project site to assess use of the artificial burrows by owls and relocation success after exclusion from the project area. Surveys shall be conducted using methods consistent with Phase II and Phase III California Burrowing Owl Consortium guidelines (CBOC 1993). Surveys shall be conducted two times in the spring and two times in the winter following eviction. The second survey within a season shall be conducted within 30 days of the first. Surveys shall continue for a period of two years to encompass a total of two spring seasons (4 total spring surveys) and two winter seasons (4 total winter surveys). Surveys and monitoring shall be conducted using non-invasive methods (i.e., high-powered binoculars, spotting scope, or camera). Owls shall not be trapped or otherwise handled to read the color band. If survey results indicate burrowing owls are not nesting within the surveyed area, remedial actions may be developed and implemented in consultation with the CPM, CDFG and USFWS to correct conditions at the site that might be preventing owls from nesting there. A report describing survey results and any remedial actions taken shall be submitted to the CPM, CDFG and USFWS no later than January 31 of each year for two years. 4. Preserve and Manage Compensatory Habitat. For each individual owl or pair identified on the project site during pre-construction surveys, off-site mitigation shall be required as described in the California Burrowing Owl Consortium guidelines (CBOC 1993). Determining which ratio to apply depends on whether the proposed compensatory habitat is occupied or unoccupied. A. Replacement of occupied habitat with occupied habitat: 1.5 times 6.5 (9.75) acres per pair of single bird B. Replacement of occupied habitat with suitable unoccupied habitat: 3 times 6.5 (19.5) acres per pair of single bird. Compensatory habitat shall be suitable for occupation by burrowing owls and preserved and managed in perpetuity for this purpose. Compensatory mitigation may be within the 118.2 acres proposed for desert tortoise and MGS (refer to BIO-15), provided that it also meets the criteria for suitable burrowing owl habitat. The compensatory habitat shall be managed for the benefit of burrowing owls, with the specific goals of:		

[1] Applies only where ground disturbance is expected (trenching, replacement poles and interset poles).
[2] COC = Conditions of Certification from the CEC Final License Decision for the Abengoa Mojave Solar Plant Project.
[3] SCE maintains responsibility for implementation of environmental protection measures, design measures, and best management practices for the Lockhart Substation and SPS Project, as described in Chapter 2.0 of the EA, including the CEC Final License Decision COCs, which are applicable to the Lockhart Substation.

Environmental Protection Measures, Design Measures, BMPs, and CEC Conditions	Responsible Party	
	Mojave Solar	SCE [3]
A. Maintaining the functionality of artificial and natural burrows; and B. Minimizing the occurrence of weeds (species considered "moderate" or "high" threat to California wildlands as defined by CAL-IPC [2006] and noxious weeds rated "A" or "B" by the California Department of Food and Agriculture and any federal-rated pest plants [CDFA 2009]) at less than 10% cover of the shrub and herb layers. The Burrowing Owl Plan shall also include monitoring and maintenance requirements for the compensatory habitat, details on methods for measuring compliance goals, and remedial actions to be taken if management goals are not met. The final Burrowing Owl Plan is due before preconstruction surveys begin to ensure that an approved relocation methodology will be followed for any owls occurring within the project area. Therefore, it is understood that the compensatory mitigation acreage (if required) may not be identified in the Burrowing Owl Plan. However, the Plan shall propose a location for compensatory mitigation land and the acreage required, quantified according to the CBOC methods outlined above. If owls are identified during the pre-construction survey, the project owner shall submit an addendum to the Burrowing Owl Plan, which identifies the number of owls identified and the exact acreage to be preserved and managed in perpetuity for burrowing owl based on the results of the preconstruction survey and as agreed to in consultation with CDFG.		
14. **American Badger and Desert Kit Fox Impact Avoidance and Minimization Measures BIO-14** To avoid direct impacts to American badgers and desert kit fox, preconstruction surveys shall be conducted for these species concurrent with the desert tortoise surveys. Surveys shall be conducted as described below: Biological Monitors shall perform pre-construction surveys for badger setts and kit fox burrows in the project area, including areas within 250 feet of the project site. If burrows are detected, each burrow shall be classified as inactive, potentially active, or definitely active. Inactive burrows and setts that would be directly impacted by construction activities shall be excavated by hand and backfilled to prevent reuse by badgers or kit fox. Potentially and definitely active burrows and setts shall not be disturbed during the whelping/pupping season (February 1 – September 30). Potentially and definitely active dens that would be directly impacted by construction activities shall be monitored by the Biological Monitor for three consecutive nights using a tracking medium (such as diatomaceous earth or fire clay) and/or infrared camera stations at the entrance. If no tracks are observed in the tracking medium	X-COC	X

[1] Applies only where ground disturbance is expected (trenching, replacement poles and interset poles).
[2] COC = Conditions of Certification from the CEC Final License Decision for the Abengoa Mojave Solar Plant Project.
[3] SCE maintains responsibility for implementation of environmental protection measures, design measures, and best management practices for the Lockhart Substation and SPS Project, as described in Chapter 2.0 of the EA, including the CEC Final License Decision COCs, which are applicable to the Lockhart Substation.

Environmental Protection Measures, Design Measures, BMPs, and CEC Conditions	Responsible Party	
	Mojave Solar	SCE [3]
or no photos of the target species are captured after three nights, the den shall be excavated and backfilled by hand. If tracks are observed, the Biological Monitor shall directly observe the burrow or sett and block the entrance after the animal exits and the Biological Monitor has verified that there are no animals in the burrow or sett. The burrow or den shall be blocked with natural materials (e.g., rocks, dirt, sticks, and vegetation piled in front of the entrance) or passive hazing methods shall be employed for the next three to five nights to discourage the badger or kit fox from continued use. Passive hazing methods shall be approved by CDFG. Live or other traps shall not be used (CCR Title 14 Section 460). A kit fox or badger shall never be trapped in its burrow/sett. After verification that the den is unoccupied it shall then be excavated and backfilled by hand to ensure that no badgers or kit fox are trapped in the den.		
15. **Compensatory Mitigation BIO-15** To fully mitigate for habitat loss and incidental take of desert tortoise and Mohave ground squirrel as well as burrowing owl, the project owner shall acquire, prior to ground-disturbing activities, in fee or in easement, no less than 118.2 acres of land suitable for these species and shall provide funding for the enhancement and long-term management of these compensation lands. The responsibilities for management of the compensation lands may be delegated by written agreement to CDFG or to a third party, such as a non-governmental organization dedicated to habitat conservation, subject to approval by the CPM, in consultation with CDFG and USFWS prior to land acquisition or management activities. If habitat disturbance exceeds that described in this analysis, the project owner shall be responsible for acquisition and management of additional compensation lands and/or additional funds required to compensate for any additional habitat disturbances. Additional funds shall be based on the adjusted market value of compensation lands at the time of construction to acquire and manage habitat. Agreements to delegate land acquisition or management shall be implemented within 12 months of the Energy Commission's decision. The acquisition and management of compensation lands shall include, but is not limited to, the following elements: 1. <u>Selection Criteria for Compensation Lands.</u> The compensation lands selected for acquisition or title/easement transfer shall: A. have substantial capacity to support resident and dispersing desert tortoise, MGS, and burrowing owl; B. be a contiguous block of land (preferably) or located so that parcel(s) result in a contiguous block of protected habitat;	X-COC	X

[1] Applies only where ground disturbance is expected (trenching, replacement poles and interset poles).
[2] COC = Conditions of Certification from the CEC Final License Decision for the Abengoa Mojave Solar Plant Project.
[3] SCE maintains responsibility for implementation of environmental protection measures, design measures, and best management practices for the Lockhart Substation and SPS Project, as described in Chapter 2.0 of the EA, including the CEC Final License Decision COCs, which are applicable to the Lockhart Substation.

Environmental Protection Measures, Design Measures, BMPs, and CEC Conditions	Responsible Party	
	Mojave Solar	SCE [3]
C. not be encumbered by easements or uses that will preclude fencing of the site or preclude management of the site for the primary benefit of the species for which mitigation lands were secured; and D. include mineral/water rights or ensure that those rights may not be evoked in a manner to negate the value of the compensation lands. 2. Review and Approval of Compensation Lands Prior to Acquisition or Title/Easement Transfer. A minimum of three months prior to acquisition or transfer of the property title and/or easement, the project owner, or a third-party approved by the CPM, in consultation with CDFG and USFWS, shall submit a proposal to the CPM, CDFG, and USFWS describing the parcel(s) intended for purchase or title/easement transfer. This proposal shall discuss the suitability of the proposed parcel(s) as compensation lands for desert tortoise, MGS, and burrowing owl in relation to the criteria listed above. Approval from the CPM, in consultation with USFWS and CDFG, shall be required for acquisition of all parcels comprising no less than 118.2 acres in advance of purchase or title/easement transfer. 3. Review and Approval of Compensation Lands Management Plan. Within six months of the land or easement purchase or transfer, as determined by the date on the title, the project owner, or a third-party approved by the CPM, in consultation with CDFG and USFWS, shall submit a compensation lands management plan to the CPM, CDFG, and USFWS. The plan shall include, but not be limited to proposed measures to enhance habitat (e.g., removal of structures and other human attractants); maintenance procedures; general maintenance provisions (e.g., trash dumping, trespass, pesticide use avoidance, etc.). 4. Mitigation. Security for Compensation Lands and Avoidance/Minimization Measures. The project owner shall provide financial assurances to the CPM, with copies of the document(s) to CDFG and USFWS, to guarantee that an adequate level of funding is available to implement all biological avoidance, minimization, and compensation measures described in the conditions of certification. These funds shall be used solely for implementation of the measures associated with the project. The project owner or an approved third party shall complete acquisition of the proposed compensation lands prior to initiating ground-disturbing project activities. 5. Conditions for Acquisition of Compensation Lands. The project owner shall comply with the following conditions relating to acquisition of compensation lands or transfer of the property's title and/or easement after the CPM, in consultation with CDFG and USFWS, has approved the		

[1] Applies only where ground disturbance is expected (trenching, replacement poles and interset poles).
[2] COC = Conditions of Certification from the CEC Final License Decision for the Abengoa Mojave Solar Plant Project.
[3] SCE maintains responsibility for implementation of environmental protection measures, design measures, and best management practices for the Lockhart Substation and SPS Project, as described in Chapter 2.0 of the EA, including the CEC Final License Decision COCs, which are applicable to the Lockhart Substation.

Environmental Protection Measures, Design Measures, BMPs, and CEC Conditions	Responsible Party	
	Mojave Solar	SCE [3]
proposed compensation lands as described above. A. Preliminary Report: The project owner, or approved third party, shall provide a recent preliminary title report (no more than six months old), hazardous materials survey report (i.e., Phase I ESA), biological analysis, and other necessary documents for the proposed 118.2 acres. All documents conveying or conserving compensation lands and all conditions of title/easement are subject to a field review and approval by the CPM, in consultation with CDFG and USFWS, California Department of General Services and, if applicable, the Fish and Game Commission and/or Wildlife Conservation Board. B. Title/Conveyance: The project owner shall transfer fee title/deed or a conservation easement for the 118.2 acres of compensation lands to CDFG under terms approved by CDFG. Alternatively, a CPM-approved, in consultation with CDFG and USFWS, non-profit organization qualified pursuant to California Government Code section 65965 may hold fee title or a conservation easement over the compensation lands. In the event an approved non-profit holds title, a conservation easement shall be recorded in favor of CDFG in a form approved by CDFG and USFWS; in the event an approved nonprofit holds a conservation easement over the compensation lands, CDFG shall be named a third party beneficiary. USFWS shall be named a third party beneficiary regardless of who holds the easement. The project owner shall also provide a property assessment and warranty. C. Enhancement Fund. The project owner shall fund the initial protection and enhancement of the 118.2 acres by providing the enhancement fund to the CDFG. Alternatively, a CPM-approved, in consultation with CDFG and USFWS, non-profit organization qualified pursuant to California Government Code section 65965 to manage the compensation lands may hold the enhancement funds. If CDFG takes fee title to the compensation lands, the enhancement fund must go to CDFG. D. Endowment Fund: Prior to ground-disturbing project activities, the project owner shall provide to CDFG a capital endowment in the amount determined through the Property Analysis Record (PAR) or PAR-like analysis that will be conducted for the 118.2 acres of compensation lands. Alternatively, a CPM-approved, in consultation with CDFG and USFWS, non-profit organization qualified pursuant to California Government Code section 65965 may hold the endowment fees. If CDFG takes fee title to the compensation lands, the endowment must go to CDFG, where it will likely be held in the special deposit fund established pursuant to		

[1] Applies only where ground disturbance is expected (trenching, replacement poles and interset poles).
[2] COC = Conditions of Certification from the CEC Final License Decision for the Abengoa Mojave Solar Plant Project.
[3] SCE maintains responsibility for implementation of environmental protection measures, design measures, and best management practices for the Lockhart Substation and SPS Project, as described in Chapter 2.0 of the EA, including the CEC Final License Decision COCs, which are applicable to the Lockhart Substation.

Environmental Protection Measures, Design Measures, BMPs, and CEC Conditions	Responsible Party	
	Mojave Solar	SCE [3]
Government Code section 16370. If the special deposit fund is not used to manage the endowment, the California Wildlife Foundation will manage the endowment for CDFG and with CDFG guidance. The project owner and the CPM shall ensure that an agreement is in place with the endowment holder/manager to ensure the following: • Interest. Interest generated from the initial capital endowment shall be available for reinvestment into the principal and for the long-term operation, management, and protection of the approved compensation lands, including reasonable administrative overhead, biological monitoring, improvements to carrying capacity, law enforcement measures, and any other action designed to protect or improve the habitat values of the compensation lands. • Withdrawal of Principal. The endowment principal shall not be drawn upon unless such withdrawal is deemed necessary by the CDFG or the approved third-party endowment manager to ensure the continued viability of the species on the 118.2 acres. If CDFG takes fee title to the compensation lands, monies received by CDFG pursuant to this provision will likely be deposited in a special deposit fund established pursuant to Government Code section 16370. If the special deposit fund is not used to manage the endowment, the California Wildlife Foundation will manage the endowment for CDFG and with CDFG guidance. E. Pooling Endowment Funds. CDFG, or a CPM-approved, in consultation with CDFG and USFWS, non-profit organization qualified pursuant to California Government Code section 65965 to hold endowments may pool the endowment with other endowments for the operation, management, and protection of the 118.2 acres for local populations of desert tortoise and MGS. However, for reporting purposes, the endowment fund must be tracked and reported individually. F. Security Deposit. The project owner may proceed with ground disturbing activities before fully performing its compensatory mitigation duties and obligations as set forth above only if the project owner secures its performance by providing funding to CDFG (Security Deposit), or if CDFG approves, administrative proof of funding, necessary to cover easement costs, fencing/cleanup costs, and as necessary, initial protection and enhancement of the		

[1] Applies only where ground disturbance is expected (trenching, replacement poles and interset poles).
[2] COC = Conditions of Certification from the CEC Final License Decision for the Abengoa Mojave Solar Plant Project.
[3] SCE maintains responsibility for implementation of environmental protection measures, design measures, and best management practices for the Lockhart Substation and SPS Project, as described in Chapter 2.0 of the EA, including the CEC Final License Decision COCs, which are applicable to the Lockhart Substation.

Environmental Protection Measures, Design Measures, BMPs, and CEC Conditions	Responsible Party	
	Mojave Solar	SCE [3]
compensation lands. If the Security is provided to allow the commencement of project disturbance prior to completion of compensation actions, the project owner, CDFG, or a third-party entity approved by the CPM, in consultation with CDFG and USFWS, may draw on the principle sum if it is determined that the project owner has failed to comply with the conditions of certification. The security will be returned to the project owner upon completion of the legal transfer of the compensation lands to CDFG or approved third-party entity, or upon completion of an implementation agreement with a third party mitigation banking entity acceptable to the CPM and CDFG, to acquire and/or manage the compensation lands. The Security is calculated as follows: • Costs of enhancing compensation lands are estimated at $250 per acre. • Costs of establishing an endowment for long-term management of compensation lands are estimated at $1,300 per acre. G. Reimbursement Fund. The project owner shall provide reimbursement to the CDFG or approved third party for reasonable expenses incurred during title, easement, and documentation review; expenses incurred from other state agency reviews; and overhead related to providing compensation lands. The project owner is responsible for all compensation lands acquisition/easement costs, including but not limited to, title and document review costs, as well as expenses incurred from other state agency reviews and overhead related to providing compensation lands to the department or approved third party; escrow fees or costs; environmental contaminants clearance; and other site cleanup measures. The project owner may choose to satisfy its mitigation obligations by paying an in-lieu fee instead of acquiring compensation lands to mitigate for 118.2 acres of habitat, pursuant to California Senate Bill 34 (enacting CESA § 2069 and 2099) or other applicable in-lieu fee provision, to the extent the in-lieu fee provision is found by the Energy Commission to be in compliance with CEQA and CESA requirements.		
16. **Tamarisk Eradication, Monitoring, and Reporting Program BIO-16** The project owner shall ensure effective removal of tamarisk by designing and implementing a monitoring and reporting plan. The plan shall include proposed methods for tamarisk removal and treatment, monitoring and maintenance procedures/timeline, irrigation, success standards and contingency measures, and monitoring and	X-COC	X

[1] Applies only where ground disturbance is expected (trenching, replacement poles and interset poles).
[2] COC = Conditions of Certification from the CEC Final License Decision for the Abengoa Mojave Solar Plant Project.
[3] SCE maintains responsibility for implementation of environmental protection measures, design measures, and best management practices for the Lockhart Substation and SPS Project, as described in Chapter 2.0 of the EA, including the CEC Final License Decision COCs, which are applicable to the Lockhart Substation.

Environmental Protection Measures, Design Measures, BMPs, and CEC Conditions	Responsible Party	
	Mojave Solar	SCE [3]
maintenance objectives to prevent the re-invasion of undesirable weeds and/or invasive wildlife species for a minimum of five years. The plan shall include identification on a map of each location and size of non-native vegetation to be removed, and the methods proposed to remove and dispose of invasive wildlife species. Exotic, non-native, and invasive species removal shall be conducted throughout the monitoring and maintenance period. Prior to any tree removal, it will be verified that there are no nesting raptors or other MBTA-protected birds. For the CPM and CDFG to deem eradication successful: • The site shall not contain more than 5% exotic plant species for the CPM and CDFG to deem the tamarisk removal successful. • All plant species with rates of dispersal and establishment listed as "High" or "Moderate" on the California Invasive Plant Inventory shall have documented absence, or have been removed from the site for at least three years for the CPM and CDFG to deem the site successful. • The site shall not contain invasive wildlife species for the CPM and CDFG to deem the site successful. Monitoring and maintenance of the site shall be conducted for five years unless less monitoring can be justified. Following the first year of monitoring, if the project owner petitions to terminate the monitoring program, staff and CDFG will determine whether more years are of monitoring are needed.		
17. **Monitoring Impacts of Solar Collection Technology on Birds BIO-17** The project owner shall prepare and implement a Bird Monitoring Study to monitor the death and injury of birds from collisions with facility features such as reflective mirror-like surfaces and from heat, and bright light from concentrating sunlight. The study design shall be approved by the CPM in consultation with CDFG and USFWS, and shall be incorporated into the project's BRMIMP and implemented. The Bird Monitoring Study shall include detailed specifications on data and carcass collection protocol and a rationale justifying the proposed schedule of carcass searches. The study shall also include seasonal trials to assess bias from carcass removal by scavengers as well as searcher bias.	X-COC	
18. **Common Raven Monitoring, Management, and Control BIO-18** The project owner shall implement the following measures to manage their construction site and related facilities in a manner to control raven populations and to mitigate cumulative and indirect impacts to desert tortoise associated with	X-COC	X

[1] Applies only where ground disturbance is expected (trenching, replacement poles and interset poles).
[2] COC = Conditions of Certification from the CEC Final License Decision for the Abengoa Mojave Solar Plant Project.
[3] SCE maintains responsibility for implementation of environmental protection measures, design measures, and best management practices for the Lockhart Substation and SPS Project, as described in Chapter 2.0 of the EA, including the CEC Final License Decision COCs, which are applicable to the Lockhart Substation.

Environmental Protection Measures, Design Measures, BMPs, and CEC Conditions	Responsible Party	
	Mojave Solar	SCE [3]
regional increases in raven numbers: 1. Common Raven Monitoring, Management, and Control Plan. The project owner shall design and implement a Common Raven Monitoring, Management, and Control Plan that is consistent with the most current USFWS-approved raven management guidelines and that meets the approval of USFWS, CDFG, and Energy Commission staff. The Raven Plan shall: A. Identify conditions associated with the project that might provide raven subsidies or attractants; B. Describe management practices to avoid or minimize conditions that might increase raven numbers and predatory activities; C. Describe control practices for ravens; D. Address monitoring and nest removal during construction and for the life of the project; E. And discuss reporting requirements. 2. USFWS Regional Raven Management. The project owner shall submit payment to the project sub-account of the REAT Account held by the National Fish and Wildlife Foundation (NFWF) to support the regional raven management plan. The amount shall be a one-time payment of $105 per acre of land permanently disturbed by the project.		
19. **Evaporation Pond Monitoring and Adaptive Management Plan BIO-19** The project owner shall design and implement an Evaporation Pond Monitoring and Adaptive Management Plan that meets the requirements of the USFWS, CDFG, RWQCB and the CPM. The objective of the Plan is to define the monitoring and reporting procedures as well as triggers for adaptive management strategies that shall be implemented to prevent wildlife mortality at the evaporation ponds. The plan shall include: • A description of evaporation pond design features such as side slope specifications, freeboard and depth requirements, which will prevent use by wildlife. • A detailed description of the wildlife monitoring procedures and schedule. For the initial implementation of a new technology, daily monitoring shall be conducted both at the project evaporation ponds and the wetlands within the Harper Lake ACEC. Monitoring may be reduced to weekly and potentially bi-weekly or monthly depending on the results of initial monitoring period. • A detailed description of the water quality and water level monitoring procedures and schedule. Water quality and water level monitoring shall coincide with wildlife monitoring to	X-COC	

[1] Applies only where ground disturbance is expected (trenching, replacement poles and interset poles).
[2] COC = Conditions of Certification from the CEC Final License Decision for the Abengoa Mojave Solar Plant Project.
[3] SCE maintains responsibility for implementation of environmental protection measures, design measures, and best management practices for the Lockhart Substation and SPS Project, as described in Chapter 2.0 of the EA, including the CEC Final License Decision COCs, which are applicable to the Lockhart Substation.

Environmental Protection Measures, Design Measures, BMPs, and CEC Conditions	Responsible Party	
	Mojave Solar	SCE [3]
provide a basis for comparative analysis. • A description of wildlife exclusion/deterrent technologies and adaptive management strategies. Technologies shall include but are not limited to netting, and shall not disturb or harass non-target wildlife adjacent to the project area. • Triggers for adaptive management (i.e., modifications to existing technology or replacement with new technology). Adaptive management shall be necessary if:1)more than one dead bird per quarter is discovered at the evaporation ponds; or 2)one special-status animal is discovered at the evaporation ponds; or 3) noise levels attributable to the technology exceed 60 dBA at the Harper Lake ACEC wetlands. After three failed attempts at new technology, the ponds shall be netted. • Reporting requirements, to include monthly reporting for the first year if a technology other than netting is used. Reporting may be reduced to monthly or quarterly thereafter if no bird or wildlife deaths are reported during the first year. If wildlife mortality occurs at the ponds or if birds are disturbed at the marsh as described above, the CPM shall be notified within 10 days of the incident and the accompanying adaptive management action to implemented. • Evaporation pond monitoring and reporting shall continue for the life of the project. The draft Plan submitted by the Applicant (AS 2009d) shall provide the basis for the final plan, subject to review and revisions form the CPM in coordination with USFWS, CDFG, and RWQCB.		
20. **Harper Dry Lake Marsh Water Delivery BIO-20** To ensure continuity of water delivery to the Harper Dry Lake ACEC the project owner shall not decommission the existing well on Mojave Solar, LLC-owned property that currently serves the Harper Dry Lake marsh (wetland well) until an alternate well is able to effectively convey a minimum of 75 acre feet per year to the Harper Dry Lake marsh. This condition of certification does not transfer to Mojave Solar, LLC the obligation of Luz Solar Partners Ltd. to allow BLM to pump 75 acre feet of water per year to the marsh, under SEGS IX Condition of Certification BIO-11.k.	X-COC	
21. **USFWS Biological Opinion BIO-21** The project owner shall provide a copy of the Biological Opinion per Section 7 of the federal Endangered Species Act written by the U. S. Fish and Wildlife Service in consultation with U.S. Department of Energy. The terms and conditions contained in the Biological Opinion shall be incorporated into the project's BRMIMP and implemented by the project owner.	X-COC	X

[1] Applies only where ground disturbance is expected (trenching, replacement poles and interset poles).
[2] COC = Conditions of Certification from the CEC Final License Decision for the Abengoa Mojave Solar Plant Project.
[3] SCE maintains responsibility for implementation of environmental protection measures, design measures, and best management practices for the Lockhart Substation and SPS Project, as described in Chapter 2.0 of the EA, including the CEC Final License Decision COCs, which are applicable to the Lockhart Substation.

Environmental Protection Measures, Design Measures, BMPs, and CEC Conditions	Responsible Party	
	Mojave Solar	SCE [3]
Measures From the U.S. Fish and Wildlife Service Biological Opinion		
General Protective Measures: To minimize adverse effects to the desert tortoise, Abengoa and SCE will implement the following protective measures during construction, operation, and maintenance activities. We have changed the wording of some measures identified in the biological assessment and translocation plan, but we have not changed the substance of the measures that Abengoa and SCE have proposed.		
1. Abengoa and SCE will assign a designated biologist to the project that meets the criteria of a desert tortoise authorized biologist as described by the Service. (Throughout this biological opinion, 'authorized biologist' refers to an authorized biologist with regard to the desert tortoise.)	X	X
2. Abengoa and SCE will employ authorized biologists, approved by the Bureau, Service, CEC and California Department of Fish and Game (CDFG), and desert tortoise monitors to ensure compliance with protective measures for the desert tortoise. Use of authorized biologists and desert tortoise monitors will be in accordance with the most up-to-date Service guidance and will be required for monitoring of any construction, operation, or maintenance activities that may result in adverse effects to the desert tortoise. The current guidance is entitled *Desert Tortoise – Authorized Biologist and Monitor Responsibilities and Qualifications* (Service 2008a).	X	X
3. Abengoa and SCE will provide the credentials of all individuals seeking approval as authorized biologists to the DOE, Bureau, Service, CEC and CDFG. (A qualifications statement for authorized biologists and an authorized biologist request form are located on our website (http://www.fws.gov/ventura/speciesinfo/protocols_guidelines/); please use these forms to fully understand the qualifications we are seeking for authorized biologists and to request our approval of these biologists.)	X	X
4. Abengoa and SCE will use authorized biologists for the performance of clearance surveys and for any other activities that require the handling of desert tortoises. If Abengoa uses desert tortoise monitors during clearance surveys or for other activities that require identification of sign or handling of desert tortoises, they will do so under the direct supervision of an authorized biologist.	X	X
5. Abengoa and SCE will designate a field contact representative who will oversee compliance with protective measures during construction, operation, and maintenance activities that may result in injury or mortality of desert tortoises. If the field contact representative, authorized biologist, or desert tortoise monitor identifies a violation of the desert tortoise protective measures, they will halt work until the violation is corrected.	X	X

[1] Applies only where ground disturbance is expected (trenching, replacement poles and interset poles).
[2] COC = Conditions of Certification from the CEC Final License Decision for the Abengoa Mojave Solar Plant Project.
[3] SCE maintains responsibility for implementation of environmental protection measures, design measures, and best management practices for the Lockhart Substation and SPS Project, as described in Chapter 2.0 of the EA, including the CEC Final License Decision COCs, which are applicable to the Lockhart Substation.

Environmental Protection Measures, Design Measures, BMPs, and CEC Conditions	Responsible Party	
	Mojave Solar	SCE [3]
6. Abengoa and SCE will develop and implement a worker environmental awareness program. The worker environmental awareness program will be administered to all project employees, as well as employees of contractors and subcontractors, who work on the project site or any related facilities during site mobilization, ground disturbance, grading, construction, operation, and closure. The worker environmental awareness program will include, but is not limited to, the following: a) a presentation in which supporting written material and electronic media are made available to all participants; b) a discussion of the locations and types of sensitive biological resources on the project site and adjacent areas; c) a discussion of penalties for violation of applicable laws, ordinances, regulations, and standards (i.e., Federal and State Endangered Species Acts); and d) identification of a contact if workers have further comments and questions about the material discussed in the program.	X	X
7. Abengoa and SCE will develop and implement a Biological Resources Mitigation Implementation and Monitoring Plan and submit copies of the proposed plan to the Service, Bureau and CDFG for review and comment. A copy of the Biological Resources Mitigation Implementation and Monitoring Plan will be kept on site and made readily available to biologists, regulatory agencies, the project owner, contractors, and subcontractors, as needed. The plan will identify: a) All biological resource mitigation, monitoring, and compliance measures proposed and agreed to by the project owner; b) All biological resource conditions of certification identified as necessary to avoid or mitigate impacts; c) All biological resource mitigation, monitoring, and compliance measures required in Federal agency terms and conditions, such as those provided in the biological opinion; d) All biological resource mitigation, monitoring, and compliance measures required in local agency permits, such as site grading and landscaping requirements; e) All sensitive biological resources to be affected, avoided, or mitigated by project construction, operation, and closure; f) All required mitigation measures for each sensitive biological resource; g) All locations on a map, at an approved scale, of sensitive biological resource areas subject to disturbance and areas requiring temporary protection and avoidance during construction; and	X[2]	X

[1] Applies only where ground disturbance is expected (trenching, replacement poles and interset poles).
[2] COC = Conditions of Certification from the CEC Final License Decision for the Abengoa Mojave Solar Plant Project.
[3] SCE maintains responsibility for implementation of environmental protection measures, design measures, and best management practices for the Lockhart Substation and SPS Project, as described in Chapter 2.0 of the EA, including the CEC Final License Decision COCs, which are applicable to the Lockhart Substation.

Environmental Protection Measures, Design Measures, BMPs, and CEC Conditions	Responsible Party	
	Mojave Solar	SCE [3]
h) Duration for each type of monitoring and a description of monitoring methodologies and frequency.		
8. Abengoa and SCE will ensure that the boundaries of all areas to be temporarily or permanently disturbed (including staging areas, access roads, and sites for temporary placement of spoils) will be delineated with stakes and flagging prior to construction activities in consultation with the designated biologist. Spoils will be stockpiled in disturbed areas, which do not provide habitat for special-status species. Parking areas, staging and disposal site locations will similarly be located in areas without native vegetation or special-status species habitat. All disturbances, vehicles, and equipment will be confined to the flagged areas.	X	X
9. Abengoa and SCE will not extend any new and existing roads planned for construction, widening, or other improvements outside the flagged impact area. All vehicles passing or turning around will do so within the planned impact area or in previously disturbed areas. Where new access is required outside of existing roads (e.g., new spur roads) or the construction zone, the route will be clearly marked (i.e., flagged and/or staked) prior to the onset of construction.	X	X
10. Abengoa and SCE will confine vehicular traffic during project construction and operation to existing routes of travel to and from the project site and cross-country vehicle and equipment use outside designated work areas will be prohibited. The speed limit will not exceed 25 miles per hour on Harper Lake Road and within fenced areas that have been cleared of desert tortoises and other wildlife. The speed limit will be 15 miles per hour within unfenced areas and secondary unpaved access roads.	X	X
11. During construction, Abengoa and SCE will ensure that an authorized biologist is present during all activities that have the potential to disturb soil, vegetation, and wildlife. The authorized biologist will closely monitor vegetation removal and grading activities to prevent injury or mortality of desert tortoises.	X	X
12. Abengoa will use staging areas for construction on the solar facility site within the area that has been previous cleared of desert tortoises and fenced to exclude desert tortoises. Temporary disturbance areas, if necessary, will occur within the solar facility site and will be designed, installed, and maintained with the goal of minimizing disturbance.	X	X
13. Abengoa and SCE will use road surfacing and sealants and soil bonding and weighting agents that are not toxic to wildlife and plants on unpaved surfaces.	X	X

[1] Applies only where ground disturbance is expected (trenching, replacement poles and interset poles).
[2] COC = Conditions of Certification from the CEC Final License Decision for the Abengoa Mojave Solar Plant Project.
[3] SCE maintains responsibility for implementation of environmental protection measures, design measures, and best management practices for the Lockhart Substation and SPS Project, as described in Chapter 2.0 of the EA, including the CEC Final License Decision COCs, which are applicable to the Lockhart Substation.

Environmental Protection Measures, Design Measures, BMPs, and CEC Conditions	Responsible Party	
	Mojave Solar	SCE [3]
14. Facility lighting will be designed, installed, and maintained to prevent side casting of light toward the solar facility boundaries and the Harper Dry Lake marsh. Lighting will be shielded, directional, and at the lowest intensity required for activity.	X	X
15. Parking and storage will occur within desert tortoise exclusion fencing to the extent feasible. No vehicles or construction equipment parked outside the fenced area will be moved prior to an inspection of the ground beneath the vehicle for the presence of desert tortoises.	X	X
16. During construction, an authorized biologist will drive along project access roads, particularly Harper Lake Road, at least every 3 hours during the active period (April through May and September through October) looking for desert tortoises or other vulnerable wildlife within the roadway. Outside of the active period, roads will be monitored at least twice a day in advance of peak morning and evening traffic periods. During operation, employees will report any desert tortoise sightings along roadways to the authorized biologist. If a desert tortoise is observed in the roadway or beneath a parked vehicle, it will be left to move on its own or an authorized biologist may remove and transfer the animal to a safe location as identified in the translocation plan (Karl 2011).	X	X
17. During construction, at the end of each workday, all potential desert tortoise pitfalls (trenches, bores, and other excavations) outside the permanently fenced area will be backfilled. If backfilling is not feasible, all trenches, bores, and other excavations will be sloped at a 3:1 ratio at the ends to provide wildlife escape ramps, covered completely to prevent wildlife access, or fully enclosed with temporary desert tortoise exclusion fencing. All trenches, bores, and other excavations outside the areas permanently fenced with desert tortoise exclusion fencing will be inspected at the beginning of each day, periodically throughout, and at the end of each workday by authorized biologist. If a desert tortoise is found trapped, an authorized biologist will remove and relocate it to a safe location.	X	X
18. Abengoa and SCE will inspect any construction pipe, culvert, or similar structure with a diameter greater than 3 inches, stored less than 8 inches above the ground for one or more days/nights for wildlife before the material is moved, buried, or capped. As an alternative, all such structures may be capped before being stored or placed on pipe racks.	X	X
19. Abengoa and SCE will ensure that all inadvertent deaths of sensitive species are reported to the appropriate project representative, including road kill. Species name, physical characteristics of the animal (sex, age class, length, weight), and other pertinent information will be noted and reported in the monthly compliance reports. Injured animals will be reported to the Service, CDFG, and Bureau	X	X

[1] Applies only where ground disturbance is expected (trenching, replacement poles and interset poles).
[2] COC = Conditions of Certification from the CEC Final License Decision for the Abengoa Mojave Solar Plant Project.
[3] SCE maintains responsibility for implementation of environmental protection measures, design measures, and best management practices for the Lockhart Substation and SPS Project, as described in Chapter 2.0 of the EA, including the CEC Final License Decision COCs, which are applicable to the Lockhart Substation.

Environmental Protection Measures, Design Measures, BMPs, and CEC Conditions	Responsible Party	
	Mojave Solar	SCE [3]
(when applicable) and the project owner will follow instructions provided by the wildlife agencies. If the wildlife agencies cannot be immediately reached, consideration will be given to taking the animal to a veterinary hospital.		
20. Abengoa and SCE will prevent the formation of puddles when applying water to dirt roads and construction areas (trenches or spoil piles) for dust abatement. A monitor will patrol these areas to ensure water does not puddle and attract desert tortoises, common ravens (*Corvus corax*), and other wildlife to the site and will take appropriate action to reduce water application where necessary.	X	X
21. All vehicles and/or equipment will be maintained in good working condition and will be repaired if there is evidence of leaking motor oil, antifreeze, hydraulic fluid, grease, or other hazardous materials. The project hazardous materials plan will address proper procedures in the event of spills. Hazardous spills will be immediately cleaned up and will be disposed of at an authorized facility. Servicing of construction equipment will take place only at a designated area. Service/maintenance vehicles will carry a bucket and pads to absorb leaks and spills.	X	X
22. With the exception of security personnel, Abengoa and SCE will prohibit firearms on the project site.	X	X
23. If ground-disturbing activities are required prior to site mobilization, such as for geotechnical borings or hazardous waste evaluations, an authorized biologist will be present to monitor any action that could disturb soil, vegetation, or wildlife.	X	X
24. Prior to any ground-disturbing activities on the solar facility site, Abengoa will fence the area with desert tortoise exclusion fence, either temporary or permanent, and conduct clearance surveys following Service guidelines (2009a). The exclusion fencing will follow the specifications provided in the *Desert Tortoise Field Manual* (Service 2009a). We have provided a description of the procedures for clearance, translocation, and monitoring of these animals below. Workers will perform all ground-disturbing activities in areas fenced with exclusion fence on the solar facility site.	X	X
25. To avoid impacts to desert tortoises during fence construction, the proposed fence alignment will be flagged and the alignment surveyed within 24 hours prior to fence construction. Surveys will be conducted by an authorized biologist and will provide 100 percent coverage of all areas to be disturbed during fence construction; additional transects will be surveyed along both sides of the proposed fence line. These fence line transects will cover an area approximately 90 feet wide centered on the fence alignment using 15-foot-wide transects. All desert tortoise burrows and burrows constructed by other species that might be used by desert tortoises will be examined to assess	X	X

[1] Applies only where ground disturbance is expected (trenching, replacement poles and interset poles).
[2] COC = Conditions of Certification from the CEC Final License Decision for the Abengoa Mojave Solar Plant Project.
[3] SCE maintains responsibility for implementation of environmental protection measures, design measures, and best management practices for the Lockhart Substation and SPS Project, as described in Chapter 2.0 of the EA, including the CEC Final License Decision COCs, which are applicable to the Lockhart Substation.

Environmental Protection Measures, Design Measures, BMPs, and CEC Conditions	Responsible Party	
	Mojave Solar	SCE [3]
occupancy of each burrow by desert tortoises and processed in accordance with the Service's current guidelines (Service 2009a).		
26. Abengoa will install desert tortoise exclusion fencing at the headwalls, outlet, and road crossings of the onsite storm water drainage channels.	X	
27. Security gates will be installed at the solar facility entrances and Abengoa will ensure that the gates remain closed except when vehicles enter or exit the facility. The gates will be designed with minimal ground clearance to deter ingress by desert tortoises. The gates may be electronically activated to open and close immediately after vehicle(s) have entered or exited to prevent extended periods with open gates, which might lead to a desert tortoise entering.	X	X
28. Following installation of the desert tortoise exclusion fencing for the solar facility site and storm water drainage channels, the fencing will be regularly inspected. Permanent fencing will be inspected monthly and during or immediately following all major rainfall events. Any damage to the fencing will be temporarily repaired immediately to keep desert tortoises out of the site and permanently repaired within 2 days of observing damage. Inspections of permanent site fencing will occur for the life of the solar facility. Temporary fencing will be inspected immediately following major rainfall events. All temporary fencing will be repaired immediately upon discovery and, if the fence may have permitted entry of desert tortoises while damaged, an authorized biologist will inspect the area enclosed by the fence for desert tortoises. A major rainfall event is defined as one for which soil and water flow through washes or overland that could damage the fence or erode the soil underneath.	X	
Management of Common Ravens: Abengoa and SCE will implement the following project design features and protective measures to reduce the adverse effects associated with predation of desert tortoises by common ravens. The draft management plan for common ravens (AECOM 2009) contains more detailed information on the following actions related to Abengoa's solar facility.		
1. Abengoa and SCE will dispose of all trash and food-related waste associated with the project in secure, self-closing receptacles to prevent the introduction of subsidized food resources for common ravens.	X	X
2. Abengoa will remove and dispose of all road-killed animals on the project site or its access roads.	X	X
3. Abengoa will use water for construction, operation, and maintenance (e.g., truck washing, dust suppression, landscaping, etc.) in a manner that does not result in puddling.	X	X

[1] Applies only where ground disturbance is expected (trenching, replacement poles and interset poles).
[2] COC = Conditions of Certification from the CEC Final License Decision for the Abengoa Mojave Solar Plant Project.
[3] SCE maintains responsibility for implementation of environmental protection measures, design measures, and best management practices for the Lockhart Substation and SPS Project, as described in Chapter 2.0 of the EA, including the CEC Final License Decision COCs, which are applicable to the Lockhart Substation.

Environmental Protection Measures, Design Measures, BMPs, and CEC Conditions	Responsible Party	
	Mojave Solar	SCE [3]
4. Abengoa will monitor the evaporation ponds on site for common raven use according to the approved Abengoa solar evaporation pond design monitoring and management plan and common raven management plan.	X	
5. Abengoa will monitor the Mojave Solar facility to identify frequently used perching locations for common ravens. If it identifies such locations, Abengoa will use physical, auditory or visual bird determents to discourage use by common ravens.	X	X
6. Abengoa will conduct annual breeding season monitoring for common ravens to identify any nesting common ravens on the project facility for the life of the project.	X	X
7. Abengoa will remove inactive common raven nests from project structures on lands controlled by Abengoa. SCE will address common raven nests according to its existing migratory bird special purpose permit (MB728480-1, expires 3/31/2012).	X	X
8. Abengoa will notify the Service within 24 hours if problem common ravens are found on the project site. Problem common ravens are individuals that have been shown, through monitoring, to prey on desert tortoises.	X	X
9. Abengoa will monitor the effectiveness of its management plan at reducing subsidies for common ravens during construction and for 2 years following completion of the project. After this initial period, Abengoa will conduct monitoring once every 5 years, unless results indicate more or less frequent monitoring is necessary.	X	X
10. Abengoa will develop and implement adaptive management measures if monitoring shows that the management plan is not effective in controlling common raven use of the project site. Abengoa will consult with the Service, CEC, and CDFG prior to implementing adaptive management changes.	X	X
11. To address indirect and cumulative effects that it cannot fully eliminate through implementation of an onsite common raven management plan, Abengoa and SCE will contribute $105 per acre of land permanently disturbed by this project to the regional common raven management program. The funds will be placed in an account established with the National Fish and Wildlife Foundation to implement recommendations in the Service's (2008b) environmental assessment for management of common ravens. This environmental assessment identifies several activities to reduce common raven predation on desert tortoises, including reduction of human-provided subsidies (e.g., food, water, sheltering and nesting sites), education and outreach, the removal of common ravens and their nests, evaluation of effectiveness, and adaptive management.	X	X

[1] Applies only where ground disturbance is expected (trenching, replacement poles and interset poles).
[2] COC = Conditions of Certification from the CEC Final License Decision for the Abengoa Mojave Solar Plant Project.
[3] SCE maintains responsibility for implementation of environmental protection measures, design measures, and best management practices for the Lockhart Substation and SPS Project, as described in Chapter 2.0 of the EA, including the CEC Final License Decision COCs, which are applicable to the Lockhart Substation.

Environmental Protection Measures, Design Measures, BMPs, and CEC Conditions	Responsible Party	
	Mojave Solar	SCE [3]
Weed Management: Abengoa and SCE will implement the following measures during construction and operation to prevent the spread and propagation of noxious weeds.		
1. Abengoa and SCE will limit the size of any vegetation and ground disturbance to the absolute minimum and limit ingress and egress to defined routes.	X	X
2. Abengoa and SCE will apply soil stabilization and/or re-vegetation treatments as appropriate to disturbed sites and temporarily disturbed areas.	X	X
3. During all construction activities, Abengoa and SCE will prevent the spread of nonnative plants via vehicular sources by implementing Trackclean™ (a tire cleaner designed to dislodge material from tire treads) or other methods of vehicle cleaning for vehicles coming and going from construction sites. Earth-moving equipment and construction vehicles will be cleaned within an approved area or commercial facility prior to transport to the construction site. The number of cleaning stations will be limited and weed control and herbicide application will be used at the cleaning station(s).	X	X
4. Abengoa and SCE will use only weed-free straw, hay bales, and seed, or other similar items, for erosion control and sediment barrier installations.	X	X
5. Abengoa and SCE will ensure that invasive non-native species are not used in landscaping plans and erosion control.	X	X
6. Abengoa and SCE will monitor and implement control measures to ensure early detection and eradication of weed invasions.	X	X
Protective Measures Specific to the SCE Fiber-Optic Line Installation: In addition to general measures outlined previously, all personnel involved in the construction of the fiber-optic cable installations will adhere to the following measures.		
1. SCE will use Service-approved authorized biologists to conduct preconstruction clearance surveys for desert tortoises within the limits of the proposed work activity associated with the fiber optic cable installations.		X
2. Vehicular traffic during construction will be confined to existing routes of travel to and from the project site, and cross-country vehicle and equipment use outside designated work areas will be prohibited. Where new access is required outside of existing roads (e.g., new spur roads) or the construction zone, the route will be clearly marked (i.e., flagged and/or staked) prior to the onset of construction. The speed limit will be 15 miles per hour within unfenced areas and secondary unpaved access roads.		X

[1] Applies only where ground disturbance is expected (trenching, replacement poles and interset poles).
[2] COC = Conditions of Certification from the CEC Final License Decision for the Abengoa Mojave Solar Plant Project.
[3] SCE maintains responsibility for implementation of environmental protection measures, design measures, and best management practices for the Lockhart Substation and SPS Project, as described in Chapter 2.0 of the EA, including the CEC Final License Decision COCs, which are applicable to the Lockhart Substation.

Environmental Protection Measures, Design Measures, BMPs, and CEC Conditions	Responsible Party	
	Mojave Solar	SCE [3]
Personnel will check under parked vehicles prior to moving the vehicle. If a desert tortoise is found under a vehicle and does not leave on its own, an authorized biologist can be called to move the animal out of harm's way, no more than 500 meters from its original location. (Throughout this biological opinion, "moving desert tortoises from harm's way" refers to moving the desert tortoise the minimum distance necessary to place it in a safe location, within its home range. Moving desert tortoise from harm's way will only occur on linear portions of the project. All other movements involve translocation of desert tortoises; these movements will only occur with desert tortoises found within the solar facility site.)		
3. In construction areas in potentially occupied desert tortoise habitat, work and staging areas, including the locations of the fiber optic lines under construction, may be fenced with Service-approved temporary desert tortoise exclusion fencing in a manner that prevents equipment and vehicles from straying from the designated work area into adjacent habitat. An authorized biologist will assist in determining the boundaries of the area to be fenced in consultation with the Service and CDFG, and with the Bureau when construction areas are within lands administered by the Bureau.		X
4. An authorized biologist will be onsite to address any desert tortoises found inside fenced areas that are not fully graded. When active construction occurs outside of desert tortoise exclusion fencing, monitoring will be continuous.		
5. All workers will be advised that equipment and vehicles must remain within the fenced work areas. Installation of the fencing and any necessary surveys will be directed or conducted by an authorized biologist. The fencing will remain in place for the duration of construction activities at a particular location and will be removed when construction activities are complete.		X
6. A desert tortoise authorized biologist will inspect the fencing on a biweekly basis to ensure that no holes develop that could allow desert tortoises to enter the work areas. If holes are found, they will be repaired immediately.		
7. If a desert tortoise is found within an area that has been fenced to exclude them, activities will cease until an authorized biologist moves it out of harm's way outside of the fence, no greater than 500 meters away from its original location. At this time, the fencing will be inspected for holes.		X
8. If a desert tortoise is found in a construction area where fencing was deemed unnecessary, it will be moved in the manner described in the translocation plan (Karl 2011). Any desert tortoises found during clearance surveys will be moved in the manner identified in the translocation plan (Karl 2011).		

[1] Applies only where ground disturbance is expected (trenching, replacement poles and interset poles).
[2] COC = Conditions of Certification from the CEC Final License Decision for the Abengoa Mojave Solar Plant Project.
[3] SCE maintains responsibility for implementation of environmental protection measures, design measures, and best management practices for the Lockhart Substation and SPS Project, as described in Chapter 2.0 of the EA, including the CEC Final License Decision COCs, which are applicable to the Lockhart Substation.

Environmental Protection Measures, Design Measures, BMPs, and CEC Conditions	Responsible Party	
	Mojave Solar	SCE [3]
9. Authorized biologists will follow the Service's current desert tortoise handling guidelines at all times (currently Service 2009a).		X
10. SCE will restrict work to daylight hours, except during an emergency, to avoid nighttime activities when desert tortoises may be present on the access road unless otherwise approved in advance by the Bureau and CDFG.		X
11. SCE will only use seed from locally occurring species when rehabilitating and restoring temporarily disturbed areas. Seeds will contain a mix of short-lived early pioneer species, such as native annuals and perennials and subshrubs. Seeding will be conducted as described in chapter 5 of Newton and Claassen (2003).		X
Desert Tortoise Translocation: Fencing and Clearance Surveys of the Mojave Solar Facility		
1. Abengoa will install desert tortoise exclusion fencing following specifications in the *Desert Tortoise Field Manual* (Service 2009a) prior to any construction activities on the solar facility site. The permanent fence around the solar facility will also include the drainage channel. The desert tortoise exclusion fence will be attached to the Mojave Solar facility permanent perimeter fence. Temporary fencing may be used to exclude desert tortoises until the permanent fence is installed. Temporary fencing will follow guidelines and materials for permanent fencing except in very temporary situations, when silt fencing may be used. In both cases, supporting stakes will be sufficiently spaced (e.g., ≤8 feet for wire mesh; ≤5 feet for silt fencing) to maintain fence integrity. Fencing may be buried if it would not create a biologically significant disturbance or bent outward at the ground level with the bent portion tacked or held down by rocks and soil.	X	
2. Within 24 hours prior to fence installation, authorized biologists will survey the staked fence-line for all desert tortoises and their burrows, covering a swath of at least 90 feet centered on the fence-line, using 15-foot-wide transects. Desert tortoise burrows will be flagged and mapped using Global Positioning System and the size and occupancy recorded. If possible, burrows will be avoided. Unoccupied burrows that cannot be avoided will be collapsed following standardized techniques (Service 2009a). If the burrow is occupied by a desert tortoise, it will be avoided and the burrow fenced with high visibility fencing. The burrow and fence will be continually monitored while construction proceeds in the immediate area of the burrow and once all danger of construction has passed, the fencing will be removed.	X	

[1] Applies only where ground disturbance is expected (trenching, replacement poles and interset poles).
[2] COC = Conditions of Certification from the CEC Final License Decision for the Abengoa Mojave Solar Plant Project.
[3] SCE maintains responsibility for implementation of environmental protection measures, design measures, and best management practices for the Lockhart Substation and SPS Project, as described in Chapter 2.0 of the EA, including the CEC Final License Decision COCs, which are applicable to the Lockhart Substation.

Environmental Protection Measures, Design Measures, BMPs, and CEC Conditions	Responsible Party	
	Mojave Solar	SCE [3]
3. At a minimum, one desert tortoise monitor will accompany each separate fence construction team, such that no driving, trenching, fence pulling, or any surface disturbing activities will occur without the immediate presence of a desert tortoise monitor. Maps of burrows from the preconstruction survey will be provided to all monitors.	X	
4. During fence construction, desert tortoises will be avoided if at all possible. Fence gaps and temporary fencing will be used to allow desert tortoises to leave the project site. Any desert tortoises that must be moved during perimeter fencing will be fitted with a transmitter and moved immediately outside the construction zone, following the procedures outlined in Abengoa's translocation plan (Karl 2011).	X	X
5. Following installation of the desert tortoise exclusion fencing, both permanent and temporary, the fencing will be regularly inspected. If the exclusion fence is installed during the desert tortoise active season, the fencing will be inspected at least two times a day to determine if any desert tortoises are walking along the inside of the fence.	X	X
6. Abengoa will conduct a minimum of three clearance surveys of the Mojave Solar facility site following Service guidelines (2009a). Abengoa will consider the solar facility site cleared of desert tortoises when no desert tortoises are located during two consecutive clearance passes. If a desert tortoise is found on one of the final passes, Abengoa will continue to conduct clearance surveys until two passes have been made during which no new desert tortoises are found.	X	X
7. Abengoa will map and evaluate all desert tortoise sign during each clearance pass and collect all scat located. During subsequent passes, Abengoa will conduct concentrated searches in areas where fresh scat is found . After the second pass, concentrated searches will be conducted in all areas where recent sign is concentrated, unless a desert tortoise has been found in that area.	X	X
8. Abengoa will not collapse burrows until the third pass of clearance surveys. On the third pass, Abengoa will completely excavate burrows using standardized techniques approved by the Service (2009a). Abengoa will translocate any desert tortoise nests found during burrow excavation in the manner outlined in the translocation plan (Karl 2011).	X	X
Translocation – Mojave Solar Facility:		
1. Abengoa will follow the procedures outlined in the translocation plan for the proposed project (Karl 2011). An authorized biologist will move all desert tortoises found during clearance surveys safely from the solar facility site.	X	

[1] Applies only where ground disturbance is expected (trenching, replacement poles and interset poles).
[2] COC = Conditions of Certification from the CEC Final License Decision for the Abengoa Mojave Solar Plant Project.
[3] SCE maintains responsibility for implementation of environmental protection measures, design measures, and best management practices for the Lockhart Substation and SPS Project, as described in Chapter 2.0 of the EA, including the CEC Final License Decision COCs, which are applicable to the Lockhart Substation.

Environmental Protection Measures, Design Measures, BMPs, and CEC Conditions	Responsible Party	
	Mojave Solar	SCE [3]
2. All desert tortoises determined to be appropriate for translocation (i.e., having good body condition and showing no sign of diseases such as upper respiratory tract disease, herpes virus, shell disease, or other diseases) will be marked with a unique identifier determined by the Desert Tortoise Recovery Office and released in a safe location underneath a shrub. If desert tortoises show signs of disease, they will be sent to the Desert Tortoise Conservation Center after coordinating with the Service. Prior to translocation, Abengoa will ensure that all desert tortoises receive a visual health assessment to verify that each individual does not show signs of disease. Desert tortoises translocated a distance greater than 500 meters will be tested for disease (i.e., enzyme-linked immunosorbent assay [ELISA] test) via blood sampling. Any desert tortoises moved less than 500 meters will not require a blood sample as part of the health assessment. Abengoa will not translocate desert tortoises outside of the recommended temperature guidelines or outside of the desert tortoise active season (generally between April 1 and May 31). Abengoa will maintain a record of all desert tortoises encountered and translocated during project surveys and monitoring.	X	
3. All desert tortoises translocated from the Mojave Solar facility site will be measured, weighed, and affixed with a transmitter at the time of initial capture. Following processing, if the subadult or adult desert tortoise is within 500 meters of suitable desert tortoise habitat outside of the solar facility boundary, Abengoa will place the individual in the shade of a shrub or at the mouth of a burrow and begin monitoring as described below. Subadult and adult desert tortoises that are found greater than 500 meters from suitable desert tortoise habitat outside of the solar facility site will be released at the capture site after being processed and fitted with a transmitter. Abengoa will monitor these desert tortoises daily for one week to determine if the desert tortoise moves to an area within 500 meters of suitable habitat outside of the project boundary, indicating an area with which the desert tortoise is familiar. If the desert tortoise demonstrates familiarity (e.g., burrows, fence walks, or spends the majority of their time) with an area within 500 meters of suitable desert tortoise habitat outside of the solar facility boundary, Abengoa will translocate the desert tortoise as described above. If, during the week of monitoring, the desert tortoise remains greater than 500 meters from suitable desert tortoise habitat outside the solar facility boundary, the desert tortoise will be placed in an individual quarantine pen within the translocation area.	X	
4. Abengoa will translocate juvenile desert tortoises (carapace length less than 110 millimeters) found within 100 meters of suitable desert tortoise habitat outside the solar facility boundary, in the same manner as subadult and adult desert tortoises found within 500 meters of suitable habitat. Juvenile	X	

[1] Applies only where ground disturbance is expected (trenching, replacement poles and interset poles).
[2] COC = Conditions of Certification from the CEC Final License Decision for the Abengoa Mojave Solar Plant Project.
[3] SCE maintains responsibility for implementation of environmental protection measures, design measures, and best management practices for the Lockhart Substation and SPS Project, as described in Chapter 2.0 of the EA, including the CEC Final License Decision COCs, which are applicable to the Lockhart Substation.

Environmental Protection Measures, Design Measures, BMPs, and CEC Conditions	Responsible Party	
	Mojave Solar	SCE [3]
desert tortoises found greater than 100 meters from suitable desert tortoise habitat outside the solar facility boundary will be moved into predator-proof enclosures described in the translocation plan (Karl 2011). After 2 weeks, Abengoa will create escape holes at the lower edge of the enclosures and the juvenile desert tortoises will be allowed to leave on their own.		
5. To minimize the potential adverse effects of disease, Abengoa will perform visual health assessments on all desert tortoises located within 1.5 kilometers of a desert tortoise translocated less than 500 meters; Abengoa will perform visual health assessments and ELISA testing on all desert tortoises located within 6.5 kilometers of a desert tortoise translocated greater than 500 meters. Desert tortoises in the recipient areas receiving ELISA testing will be fitted with a transmitter so that the individuals can be identified and relocated after test results are received. Following the determination of the individual's health, the transmitter will be removed. Abengoa will not translocate any desert tortoises from the project site to a location within 1.5 and 6.5 kilometers (for translocations less than and greater than 500 meters, respectively) of a resident desert tortoise showing either clinical signs of disease or with a blood test result indicating that the individual is seropositive.	X	
Monitoring - Mojave Solar Facility:		
1. Abengoa will attach transmitters to and monitor all desert tortoises cleared from the Mojave Solar facility site that are of sufficient size to accommodate transmitters. Smaller animals (i.e., those that do not receive transmitters) will be blood tested (when being moved greater than 500 meters) and translocated without transmitters if found to be in good health. Abengoa will collect blood samples on the resident subadults and adults located in the recipient areas receiving desert tortoises from more than 500 meters away. If five or more desert tortoises are found within the Mojave Solar facility site, Abengoa will work with the Service, CEC, CDFG, and Bureau to determine appropriate resident and control animals for monitoring. (We will not consider the potential effects of these activities on resident and control animals in this biological opinion; if more than four desert tortoises are found on the proposed solar site, re-initiation of formal consultation would likely be appropriate.) Abengoa will use qualified biologists, authorized by the Service, CEC, and CDFG, to monitor all desert tortoises associated with the project translocation plan.	X	
2. During monitoring, Abengoa will collect information on survivorship, mortality rates, health status, body condition, movement of individuals, and predation to inform adaptive management. Abengoa will monitor the translocated for a minimum of 5 years, unless a shorter duration is approved by the	X	

[1] Applies only where ground disturbance is expected (trenching, replacement poles and interset poles).
[2] COC = Conditions of Certification from the CEC Final License Decision for the Abengoa Mojave Solar Plant Project.
[3] SCE maintains responsibility for implementation of environmental protection measures, design measures, and best management practices for the Lockhart Substation and SPS Project, as described in Chapter 2.0 of the EA, including the CEC Final License Decision COCs, which are applicable to the Lockhart Substation.

Environmental Protection Measures, Design Measures, BMPs, and CEC Conditions	Responsible Party	
	Mojave Solar	SCE [3]
Service. Abengoa has provided a more detailed description of the monitoring program in its translocation plan (Karl 2011). Following more intensive monitoring immediately after translocation, locations for individuals will be collected at a minimum of once per week from March to November and once every other week from November to February.		
Translocation – SCE Fiber Optic Lines:		
1. SCE will not translocate any desert tortoises in association with the installation of the fiber optic lines. SCE will move from harm's way any desert tortoises found within the construction area. SCE will place desert tortoises as close as possible to the capture point immediately outside the construction zone under the shade of a shrub in suitable desert tortoise habitat. SCE will not move desert tortoises more than 500 meters. SCE will use qualified biologists, authorized by the Service, Bureau, and CDFG to handle any desert tortoises that must be moved from harm's way during the installation of the fiber optic lines.		X
Mojave Solar Project Minimization Measures: To minimize adverse effects to the desert tortoises, Abengoa and SCE will implement the following protective measures when implementing clearance surveys, translocation, and monitoring.		
1. Abengoa will use authorized biologists with additional qualifications approved by the Service for attaching transmitters and collecting blood samples.	X	X
2. Following clearance of the fenced solar facility, an authorized biologist will be onsite during initial clearing and grading to move any desert tortoises missed during the clearance surveys. Following initial clearing and grading, an authorized biologist will be on-call during construction, should a desert tortoise be located inside the project construction site.	X	X
3. An authorized biologist will hydrate all desert tortoises scheduled for translocation within 12 hours prior to release in accordance with the translocation plan.	X	X
4. Abengoa will only use Service-authorized individuals that have experience identifying the clinical signs of upper respiratory tract disease, herpes virus, and cutaneous dyskeratosis for the performance of health assessments. Abengoa will provide the Service with the qualifications of any authorized biologists that it will use to perform health assessments on desert tortoises during clearance and translocation activities.	X	X
5. The number of desert tortoises translocated into translocation areas greater than 500 meters will not exceed the Service-recommended (2010b) 130 percent over the mean density of desert tortoises in	X	X

[1] Applies only where ground disturbance is expected (trenching, replacement poles and interset poles).
[2] COC = Conditions of Certification from the CEC Final License Decision for the Abengoa Mojave Solar Plant Project.
[3] SCE maintains responsibility for implementation of environmental protection measures, design measures, and best management practices for the Lockhart Substation and SPS Project, as described in Chapter 2.0 of the EA, including the CEC Final License Decision COCs, which are applicable to the Lockhart Substation.

Environmental Protection Measures, Design Measures, BMPs, and CEC Conditions	Responsible Party	
	Mojave Solar	SCE [3]
the Western Mojave Recovery Unit, as determined by line-distance sampling.		
Compensation: Abengoa will provide approximately 118.2 and 88.6 acres of desert tortoise habitat to compensate for impacts associated with the construction of Mojave Solar facility site and the installation of the fiber-optic lines, respectively. The actual acres of compensation associated with the installation of the fiber-optic lines will be determined following the completion of the project, and will be based on the actual amount of acres disturbed. The lands will be preserved and managed in perpetuity for the benefit of the desert tortoise, pursuant to a conservation easement to be deeded to CDFG or to a third-party entity (such as the Bureau) approved by CDFG and CEC. The Bureau, CDFG, and CEC are working with Abengoa to identify the compensation lands and the total amount of desert tortoise habitat that will be preserved. The acquisition of these lands will promote the conservation of the desert tortoise to a minor degree; we will not discuss compensation further in this biological opinion.		
Cultural Resources		
1. A Monitoring Plan will be developed prior to start of construction. The document will provide protocols for construction monitoring and procedures in the event unanticipated cultural material is encountered during construction.	X	X
2. All sub-surface ground-disturbing activities shall be monitored by a qualified archaeologist.	X	X
3. A Monitoring report documenting the results of the monitoring will be prepared and submitted to BLM.	X	X
4. In the event of the discovery of unanticipated cultural material, the qualified archaeologist will coordinate with the Project construction manager and environmental compliance manager to stop all work in the vicinity of the find until the BLM archaeologist can be notified and the find can be assessed. If the discovery is determined to be not eligible, work will be allowed to continue.	X	
5. Based on the Native American contact program, Native American representatives have expressed interest in involvement in construction monitoring. The project owner will coordinate with local Native American tribes regarding their participation in construction monitoring.	X	X
6. Avoidance of cultural resources determined eligible for listing in the NRHP is preferred. If cultural resources are discovered during construction that are determined to be eligible to the NRHP, the BLM archaeologist shall be notified and BLM, the SHPO, and other interested parties will consult regarding effects. Whenever practicable, cultural resource discovered during construction that are determined eligible for listing in the NRHP will be left in place and preserved from damage. If avoidance is not feasible, adverse effects will be addressed in a Memorandum of Agreement.	X	X

[1] Applies only where ground disturbance is expected (trenching, replacement poles and interset poles).
[2] COC = Conditions of Certification from the CEC Final License Decision for the Abengoa Mojave Solar Plant Project.
[3] SCE maintains responsibility for implementation of environmental protection measures, design measures, and best management practices for the Lockhart Substation and SPS Project, as described in Chapter 2.0 of the EA, including the CEC Final License Decision COCs, which are applicable to the Lockhart Substation.

Environmental Protection Measures, Design Measures, BMPs, and CEC Conditions	Responsible Party	
	Mojave Solar	SCE [3]
Conditions of Certification From the California Energy Commission's Final Decision		
CUL-1 Prior to the start of ground disturbance (includes "preconstruction site mobilization"; "construction ground disturbance"; and "construction grading, boring and trenching," as defined in the General Conditions for this project), the project owner shall obtain the services of a Cultural Resources Specialist (CRS), and one or more alternate CRSs, if alternates are needed. The CRS shall manage all monitoring, mitigation, curation and reporting activities required in accordance with the Conditions of Certification (Conditions). The CRS may elect to obtain the services of Cultural Resources Monitors (CRMs) and other technical specialists, if needed, to assist in monitoring, mitigation, and curation activities. The project owner shall ensure that the CRS makes recommendations regarding the eligibility for listing in the California Register of Historical Resources (CRHR) of any cultural resources that are newly discovered or that may be affected in an unanticipated manner. No ground disturbance shall occur prior to CPM approval of the CRS and alternates, unless such activities are specifically approved by the CPM. Approval of a CRS may be denied or revoked for non-compliance on this or other projects. CULTURAL RESOURCES SPECIALIST The resumes for the CRS and alternate(s) shall include information demonstrating to the satisfaction of the CPM that their training and backgrounds conform to the U.S. Secretary of Interior's Professional Qualifications Standards, as published in Title 36, Code of Federal Regulations, part 61 (36 C.F.R., part 61). In addition, the CRS shall have the following qualifications: 1. The CRS's qualifications shall be appropriate to the needs of the project and shall include a background in anthropology, archaeology, history, architectural history, or a related field; 2. At least three years of archaeological or historical, as appropriate, resource mitigation and field experience in California; and 3. At least one year of experience in a decision-making capacity on cultural resources projects in California and the appropriate training and experience to knowledgably make recommendations regarding the significance of cultural resources. The resumes of the CRS and alternate CRS shall include the names and telephone numbers of contacts familiar with the work of the CRS/alternate CRS on referenced projects and demonstrate to the satisfaction of the CPM that the CRS/alternate CRS has the appropriate training and experience to implement effectively the Conditions.	X-COC	X

[1] Applies only where ground disturbance is expected (trenching, replacement poles and interset poles).
[2] COC = Conditions of Certification from the CEC Final License Decision for the Abengoa Mojave Solar Plant Project.
[3] SCE maintains responsibility for implementation of environmental protection measures, design measures, and best management practices for the Lockhart Substation and SPS Project, as described in Chapter 2.0 of the EA, including the CEC Final License Decision COCs, which are applicable to the Lockhart Substation.

Environmental Protection Measures, Design Measures, BMPs, and CEC Conditions	Responsible Party	
	Mojave Solar	SCE [3]
CULTURAL RESOURCES MONITORS CRMs shall have the following qualifications: 1. A B.S. or B.A. degree in anthropology, archaeology, historical archaeology or a related field and one year experience monitoring in California; or 2. An AS or AA degree in anthropology, archaeology, historical archaeology or a related field, and four years experience monitoring in California; or 3. Enrollment in upper division classes pursuing a degree in the fields of anthropology, archaeology, historical archaeology or a related field, and two years of monitoring experience in California. CULTURAL RESOURCES TECHNICAL SPECIALISTS The resume(s) of any additional technical specialist(s), e.g., historical archaeologist, historian, architectural historian, and/or physical anthropologist, shall be submitted to the CPM for approval.		
Verification: At least 45 days prior to the start of ground disturbance, the project owner shall submit the resume for the CRS, and alternate(s) if desired, to the CPM for review and approval. At least 10 days prior to a termination or release of the CRS, or within 10 days after the resignation of a CRS, the project owner shall submit the resume of the proposed new CRS to the CPM for review and approval. At the same time, the project owner shall also provide to the proposed new CRS the AFC and all cultural resources documents, field notes, photographs, and other cultural resources materials generated by the project. If there is no alternate CRS in place to conduct the duties of the CRS, a previously approved monitor may serve in place of a CRS so that construction may continue up to a maximum of three days without a CRS. If cultural resources are discovered then construction will remain halted until there is a CRS or alternate CRS to make a recommendation regarding significance. At least 20 days prior to ground disturbance, the CRS shall provide a letter naming anticipated CRMs for the project and stating that the identified CRMs meet the minimum qualifications for cultural resource monitoring required by this Condition. If additional CRMs are obtained during the project, the CRS shall provide additional letters to the CPM identifying the CRMs and attesting to the qualifications of the CRMs, at least five days prior to the CRMs beginning on-site duties. At least 10 days prior to any technical specialists beginning tasks, the resume(s) of the specialists shall be provided to the CPM for review and approval. At least 10 days prior to the start of ground disturbance, the project owner shall confirm in writing to the CPM that the approved CRS will be available for onsite work and is prepared to implement the cultural resources conditions.		

[1] Applies only where ground disturbance is expected (trenching, replacement poles and interset poles).
[2] COC = Conditions of Certification from the CEC Final License Decision for the Abengoa Mojave Solar Plant Project.
[3] SCE maintains responsibility for implementation of environmental protection measures, design measures, and best management practices for the Lockhart Substation and SPS Project, as described in Chapter 2.0 of the EA, including the CEC Final License Decision COCs, which are applicable to the Lockhart Substation.

Environmental Protection Measures, Design Measures, BMPs, and CEC Conditions	Responsible Party	
	Mojave Solar	SCE [3]
CUL-2 Prior to the start of ground disturbance, if the CRS has not previously worked on the project, the project owner shall provide the CRS with copies of the AFC, data responses, and confidential cultural resources reports for the project. The project owner shall also provide the CRS and the CPM with maps and drawings showing the footprints of the power plant, all linear facilities, all access roads, and all laydown areas. Maps shall include the appropriate USGS quadrangles and a map at an appropriate scale (e.g., 1:2000 or 1" = 200') for plotting cultural features or materials. If the CRS requests enlargements or strip maps for linear facility routes, the project owner shall provide copies to the CRS and CPM. The CPM shall review submittals and, in consultation with the CRS, approve those that are appropriate for use in cultural resources planning activities. No ground disturbance shall occur prior to CPM approval of maps and drawings, unless such activities are specifically approved by the CPM. If construction of the project would proceed in phases, maps and drawings not previously provided shall be submitted prior to the start of each phase. Written notification identifying the proposed schedule of each project phase shall be provided to the CRS and CPM. At a minimum, the CRS shall consult weekly with the project construction manager to confirm area(s) to be worked during the next week, until ground disturbance is completed. The project owner shall notify the CRS and CPM of any changes to the scheduling of the construction phases.	X-COC	X
Verification: At least 40 days prior to the start of ground disturbance, the project owner shall provide the AFC, data responses, and confidential cultural resources documents to the CRS, if needed, and the subject maps and drawings to the CRS and CPM. The CPM will review submittals in consultation with the CRS and approve maps and drawings suitable for cultural resources planning activities. If there are changes to any project-related footprint, revised maps and drawings shall be provided at least 15 days prior to start of ground disturbance for those changes. If project construction is phased, if not previously provided, the project owner shall submit the subject maps and drawings 15 days prior to each phase. On a weekly basis during ground disturbance, a current schedule of anticipated project activity shall be provided to the CRS and CPM by letter, e-mail, or fax. Within five days of identifying changes, the project owner shall provide written notice of any changes to scheduling of construction phase.		

[1] Applies only where ground disturbance is expected (trenching, replacement poles and interset poles).
[2] COC = Conditions of Certification from the CEC Final License Decision for the Abengoa Mojave Solar Plant Project.
[3] SCE maintains responsibility for implementation of environmental protection measures, design measures, and best management practices for the Lockhart Substation and SPS Project, as described in Chapter 2.0 of the EA, including the CEC Final License Decision COCs, which are applicable to the Lockhart Substation.

Environmental Protection Measures, Design Measures, BMPs, and CEC Conditions	Responsible Party	
	Mojave Solar	SCE [3]
CUL-3 Prior to the start of ground disturbance, the project owner shall submit the Cultural Resources Monitoring and Mitigation Plan (CRMMP), as prepared by or under the direction of the CRS, to the CPM for review and approval. The CRMMP shall be provided in the Archaeological Resource Management Report (ARMR) format, and, per ARMR guidelines, the author's name shall appear on the title page of the CRMMP. The CRMMP shall identify general and specific measures to minimize potential impacts to sensitive cultural resources. Implementation of the CRMMP shall be the responsibility of the CRS and the project owner. Copies of the CRMMP shall reside with the CRS, alternate CRS, each CRM, and the project owner's on-site construction manager. No ground disturbance shall occur prior to CPM approval of the CRMMP, unless such activities are specifically approved by the CPM. The CRMMP shall include, but not be limited to, the following elements and measures: 1. A proposed general research design that includes a discussion of archaeological research questions and testable hypotheses specifically applicable to the project area, and a discussion of artifact collection, retention/disposal, and curation policies as related to the research questions formulated in the research design. A prescriptive treatment plan may be included in the CRMMP for limited resource types. A refined research design will be prepared for any resource where data recovery is required. 2. The following statement included in the Introduction: "Any discussion, summary, or paraphrasing of the Conditions of Certification in this CRMMP is intended as general guidance and as an aid to the user in understanding the conditions and their implementation. The conditions, as written in the Commission Decision, shall supersede any summarization, description, or interpretation of the conditions in the CRMMP. The Cultural Resources Conditions of Certification from the Commission Decision are contained in Appendix A." 3. Specification of the implementation sequence and the estimated time frames needed to accomplish all project-related tasks during the ground disturbance, construction, and post-construction analysis phases of the project. 4. Identification of the person(s) expected to perform each of the tasks, their responsibilities, and the reporting relationships between project construction management and the mitigation and monitoring team. 5. A description of the manner in which Native American observers or monitors will be included, the procedures to be used to select them, and their role and responsibilities. 6. A description of all impact-avoidance measures (such as flagging or fencing) to prohibit or otherwise	X-COC	X

[1] Applies only where ground disturbance is expected (trenching, replacement poles and interset poles).
[2] COC = Conditions of Certification from the CEC Final License Decision for the Abengoa Mojave Solar Plant Project.
[3] SCE maintains responsibility for implementation of environmental protection measures, design measures, and best management practices for the Lockhart Substation and SPS Project, as described in Chapter 2.0 of the EA, including the CEC Final License Decision COCs, which are applicable to the Lockhart Substation.

Environmental Protection Measures, Design Measures, BMPs, and CEC Conditions	Responsible Party	
	Mojave Solar	SCE [3]
restrict access to sensitive resource areas that are to be avoided during construction and/or operation, and identification of areas where these measures are to be implemented. The description shall address how these measures would be implemented prior to the start of construction and how long they would be needed to protect the resources from project-related effects. 7. A statement that all cultural resources encountered shall be recorded on Department of Parks and Recreation (DPR) 523 forms and mapped and photographed. In addition, all archaeological materials retained as a result of the archaeological investigations (survey, testing, data recovery) shall be curated in accordance with the California State Historical Resources Commission's *Guidelines for the Curation of Archaeological Collections*, into a retrievable storage collection in a public repository or museum. 8. A statement that the project owner will pay all curation fees for artifacts recovered and for related documentation produced during cultural resources investigations conducted for the project. The project owner shall identify three possible curation facilities that could accept cultural resources materials resulting from project activities. 9. A statement that the CRS has access to equipment and supplies necessary for site mapping, photography, and recovery of any cultural resource materials that are encountered during ground disturbance and cannot be treated prescriptively. 10. A description of the contents and format of the Cultural Resource Report (CRR), which shall be prepared according to ARMR guidelines.		
Verification: At least 30 days prior to the start of ground disturbance, the project owner shall submit the subject CRMMP to the CPM for review and approval. At least 30 days prior to the start of ground disturbance, a letter shall be provided to the CPM indicating that the project owner agrees to pay curation fees for any materials collected as a result of the archaeological investigations (survey, testing, data recovery).		
CUL-4 The project owner shall submit the Cultural Resources Report (CRR) to the CPM for approval. The CRR shall be written by or under the direction of the CRS and shall be provided in the ARMR format. The CRR shall report on all field activities including dates, times and locations, findings, samplings, and analyses. All survey reports, DPR 523 forms, and additional research reports not previously submitted to the California Historical Resource Information System (CHRIS) and the State Historic Preservation Officer (SHPO) shall be included as an appendix to the CRR.	X-COC	X

[1] Applies only where ground disturbance is expected (trenching, replacement poles and interset poles).
[2] COC = Conditions of Certification from the CEC Final License Decision for the Abengoa Mojave Solar Plant Project.
[3] SCE maintains responsibility for implementation of environmental protection measures, design measures, and best management practices for the Lockhart Substation and SPS Project, as described in Chapter 2.0 of the EA, including the CEC Final License Decision COCs, which are applicable to the Lockhart Substation.

Environmental Protection Measures, Design Measures, BMPs, and CEC Conditions	Responsible Party	
	Mojave Solar	SCE [3]
If the project owner requests a suspension of construction activities, then a draft CRR that covers all cultural resources activities associated with the project shall be prepared by the CRS and submitted to the CPM for review and approval on the same day as the suspension/extension request. The draft CRR shall be retained at the project site in a secure facility until construction resumes or the project is withdrawn. If the project is withdrawn, then a final CRR shall be submitted to the CPM for review and approval at the same time as the withdrawal request.		
Verification: Within 90 days after completion of ground disturbance (including landscaping), the project owner shall submit the CRR to the CPM for review and approval. If any reports have previously been sent to the CHRIS, then receipt letters from the CHRIS or other verification of receipt shall be included in an appendix. Within 90 days after completion of ground disturbance (including landscaping), the project owner shall provide to the CPM a copy of an agreement with, or other written commitment from, a curation facility that meets the standards stated in the California State Historical Resources Commission's *Guidelines for the Curation of Archaeological Collections*, to accept cultural materials, if any, from this project. Any agreements concerning curation will be retained and available for audit for the life of the project. Within 10 days after CPM approval, the project owner shall provide documentation to the CPM confirming that copies of the CRR have been provided to the SHPO, the CHRIS, and the curating institution, if archaeological materials were collected. Within 30 days after requesting a suspension of construction activities, the project owner shall submit a draft CRR to the CPM for review and approval.		
CUL-5 Prior to and for the duration of ground disturbance, the project owner shall provide Worker Environmental Awareness Program (WEAP) training to all new workers within their first week of employment at the project site, laydown area, and along the linear facilities routes. The training shall be prepared by the CRS, may be conducted by any member of the archaeological team, and may be presented in the form of a video. The CRS shall be available (by telephone or in person) to answer questions posed by employees. The training may be discontinued when ground disturbance is completed or suspended, but must be resumed when ground disturbance, such as landscaping, resumes. The training shall include: 1. A discussion of applicable laws and penalties under the law; 2. Samples or visuals of artifacts that might be found in the project vicinity; 3. Instruction that the CRS, alternate CRS, and CRMs have the authority to halt construction in the area of a discovery to an extent sufficient to ensure that the resource is protected from further impacts, as	X-COC	X

[1] Applies only where ground disturbance is expected (trenching, replacement poles and interset poles).
[2] COC = Conditions of Certification from the CEC Final License Decision for the Abengoa Mojave Solar Plant Project.
[3] SCE maintains responsibility for implementation of environmental protection measures, design measures, and best management practices for the Lockhart Substation and SPS Project, as described in Chapter 2.0 of the EA, including the CEC Final License Decision COCs, which are applicable to the Lockhart Substation.

Environmental Protection Measures, Design Measures, BMPs, and CEC Conditions	Responsible Party	
	Mojave Solar	SCE [3]
determined by the CRS; 4. Instruction that employees are to halt work on their own in the vicinity of a potential cultural resources discovery and shall contact their supervisor and the CRS or CRM, and that redirection of work would be determined by the construction supervisor and the CRS; 5. An informational brochure that identifies reporting procedures in the event of a discovery; 6. An acknowledgement form signed by each worker indicating that they have received the training; and 7. A sticker that shall be placed on hard hats indicating that environmental training has been completed. No ground disturbance shall occur prior to implementation of the WEAP program, unless such activities are specifically approved by the CPM.		
Verification: At least 30 days prior to the beginning of ground disturbance, the CRS shall provide the training program draft text and graphics and the informational brochure to the CPM for review and approval, and the CPM will provide to the project owner a WEAP Training Acknowledgement form for each WEAP-trained worker to sign. On a monthly basis, until ground disturbance is completed, the project owner shall provide in the Monthly Compliance Report (MCR) the WEAP Training Acknowledgement forms of workers at the project site and on the linear facilities who have completed the training in the prior month and a running total of all persons who have completed training to date.		
CUL-6 The project owner shall ensure that the CRS, alternate CRS, or CRMs monitor full time all ground disturbance at the project site, and ground disturbance at laydown areas, roads, and other ancillary areas, to ensure there are no impacts to undiscovered resources and to ensure that known resources are not impacted in an unanticipated manner. Full-time archaeological monitoring for this project shall be the archaeological monitoring of all project-related ground disturbance in the project area for as long as the activities are ongoing. Where excavation equipment is actively removing dirt and hauling the excavated material farther than fifty feet from the location of active excavation, full-time archaeological monitoring shall require at least two monitors per excavation area. In this circumstance, one monitor shall observe the location of active excavation and a second monitor shall inspect the dumped material. For excavation areas where the excavated material is dumped no further than fifty feet from the location of active excavation, one monitor shall both observe the location of active excavation and inspect the dumped material.	X-COC	X

[1] Applies only where ground disturbance is expected (trenching, replacement poles and interset poles).
[2] COC = Conditions of Certification from the CEC Final License Decision for the Abengoa Mojave Solar Plant Project.
[3] SCE maintains responsibility for implementation of environmental protection measures, design measures, and best management practices for the Lockhart Substation and SPS Project, as described in Chapter 2.0 of the EA, including the CEC Final License Decision COCs, which are applicable to the Lockhart Substation.

Environmental Protection Measures, Design Measures, BMPs, and CEC Conditions	Responsible Party	
	Mojave Solar	SCE [3]
In the event that the CRS believes that the current level of monitoring is not appropriate in certain locations, a letter or e-mail detailing the justification for changing the level of monitoring shall be provided to the CPM for review and approval prior to any change in the level of monitoring. The research design in the CRMMP shall govern the collection, treatment, retention/disposal, and curation of any archaeological materials encountered. On forms provided by the CPM, CRMs shall keep a daily log of any monitoring and other cultural resources activities and any instances of non-compliance with the Conditions and/or applicable LORS. Copies of the daily monitoring logs shall be provided by the CRS to the CPM, if requested by the CPM. From these logs, the CRS shall compile a monthly monitoring summary report to be included in the MCR. If there are no monitoring activities, the summary report shall specify why monitoring has been suspended. The CRS or alternate CRS shall report daily to the CPM on the status of cultural resources-related activities at the construction site, unless reducing or ending daily reporting is requested by the CRS and approved by the CPM. The CRS, at his or her discretion, or at the request of the CPM, may informally discuss cultural resources monitoring and mitigation activities with Energy Commission technical staff (Staff). Cultural resources monitoring activities are the responsibility of the CRS. Any interference with monitoring activities, removal of a monitor from duties assigned by the CRS, or direction to a monitor to relocate monitoring activities by anyone other than the CRS shall be considered non-compliance with these Conditions. Upon becoming aware of any incidents of non-compliance with the Conditions and/or applicable LORS, the CRS and/or the project owner shall notify the CPM by telephone or e-mail within 24 hours. The CRS shall also recommend corrective action to resolve the problem or achieve compliance with the Conditions. When the issue is resolved, the CRS shall write a report describing the issue, the resolution of the issue, and the effectiveness of the resolution measures. This report shall be provided in the next MCR for the review of the CPM. A Native American monitor shall be obtained to monitor ground disturbance in areas where Native American artifacts are discovered. Informational [contact] lists of concerned Native Americans and guidelines for monitoring shall be obtained from the Native American Heritage Commission. Preference in selecting a monitor shall be given to Native Americans with traditional ties to the area that shall be monitored. If efforts to obtain the services of a qualified Native American monitor are unsuccessful, the project owner shall immediately inform the CPM. The CPM will either identify potential monitors or will allow ground disturbance to proceed without a Native		

[1] Applies only where ground disturbance is expected (trenching, replacement poles and interset poles).
[2] COC = Conditions of Certification from the CEC Final License Decision for the Abengoa Mojave Solar Plant Project.
[3] SCE maintains responsibility for implementation of environmental protection measures, design measures, and best management practices for the Lockhart Substation and SPS Project, as described in Chapter 2.0 of the EA, including the CEC Final License Decision COCs, which are applicable to the Lockhart Substation.

Environmental Protection Measures, Design Measures, BMPs, and CEC Conditions	Responsible Party	
	Mojave Solar	SCE [3]
American monitor.		
Verification: At least 30 days prior to the start of ground disturbance, the CPM will provide to the CRS an electronic copy of a form to be used as a daily monitoring log. While monitoring is on-going, the project owner shall include in each MCR a copy of the monthly summary report of cultural resources-related monitoring prepared by the CRS. Daily, as long as no cultural resources are found, the CRS shall provide a statement that "no cultural resources over 50 years of age were discovered" to the CPM as an e-mail, or in some other form acceptable to the CPM. If the CRS concludes that daily reporting is no longer necessary, a letter or e-mail providing a detailed justification for the decision to reduce or end daily reporting shall be provided to the CPM for review and approval at least 24 hours prior to reducing or ending daily reporting. At least 24 hours prior to implementing a proposed change in monitoring level, documentation justifying the change shall be submitted to the CPM for review and approval. No later than 30 days following the discovery of any Native American cultural materials, the project owner shall submit to the CPM copies of the information transmittal letters sent to the Chairperson of the Native American tribes or groups who requested the information. Additionally, the project owner shall submit to the CPM copies of letters of transmittal for all subsequent responses to Native American requests for notification, consultation, and reports and records and any comments or information provided in response by the Native Americans.		
CUL-7 The project owner shall grant authority to halt construction to the CRS, alternate CRS, and the CRMs in the event of a discovery. Redirection of ground disturbance shall be accomplished under the direction of the construction supervisor in consultation with the CRS. In the event cultural resources over 50 years of age or, if younger, considered exceptionally significant are found, or impacts to such resources can be anticipated, ground disturbance shall be halted or redirected in the immediate vicinity of the discovery sufficient to ensure that the resource is protected from further impacts. Monitoring and daily reporting as provided in CUL-6 shall continue during all grounddisturbing activities wherever project construction is not halted. The halting or redirection of construction shall remain in effect until the CRS has visited the discovery, and all of the following have occurred: 1. The CRS has notified the project owner, and the CPM has been notified within 24 hours of the discovery, or by Monday morning if the cultural resources discovery occurs between 8:00 AM on Friday and 8:00 AM on Sunday morning, including a description of the discovery (or changes in	X-COC	X

[1] Applies only where ground disturbance is expected (trenching, replacement poles and interset poles).
[2] COC = Conditions of Certification from the CEC Final License Decision for the Abengoa Mojave Solar Plant Project.
[3] SCE maintains responsibility for implementation of environmental protection measures, design measures, and best management practices for the Lockhart Substation and SPS Project, as described in Chapter 2.0 of the EA, including the CEC Final License Decision COCs, which are applicable to the Lockhart Substation.

Environmental Protection Measures, Design Measures, BMPs, and CEC Conditions	Responsible Party	
	Mojave Solar	SCE [3]
character or attributes), the action taken (i.e. work stoppage or redirection), a recommendation of eligibility, and recommendations for mitigation of any cultural resources discoveries, whether or not a determination of significance has been made. 2. The CRS has completed field notes, measurements, and photography for a DPR 523 "Primary" form. The "Description" entry of the DPR 523 "Primary" form shall include a recommendation on the significance of the find. The project owner shall submit completed forms to the CPM. 3. The CRS, the project owner, and the CPM have conferred, and the CPM has concurred with the recommended eligibility of the discovery and approved the CRS's proposed data recovery, if any, including the curation of the artifacts, or other appropriate mitigation; and any necessary data recovery and mitigation have been completed.		
Verification: At least 30 days prior to the start of ground disturbance, the project owner shall provide the CPM and CRS with a letter confirming that the CRS, alternate CRS, and CRMs have the authority to halt construction activities in the vicinity of a cultural resources discovery, and that the project owner shall ensure that the CRS notifies the CPM within 24 hours of a discovery, or by Monday morning if the cultural resources discovery occurs between 8:00 AM on Friday and 8:00 AM on Sunday morning. Completed DPR 523 forms for resources newly discovered during construction shall be submitted to the CPM for review and approval no later than 24 hours following the notification of the CPM, or 48 hours following the completion of data recordation/recovery, whichever the CRS decides is more appropriate for the subject cultural resource.		
Public Health and Safety (Hazardous Materials Management, Public Health, Worker Safety and Fire Protection, Waste Management)		
Conditions of Certification From the California Energy Commission's Final Decision		
HAZ-1 The project owner shall not use any hazardous materials not listed in Appendix A to Section E of the Final License Decision, below, or in greater quantities or strengths than those identified by chemical name in Appendix A to Section E of the Final License Decision, unless approved in advance by the Compliance Project Manager (CPM).	X-COC	X
Verification: The project owner shall provide to the CPM, in the Annual Compliance Report, a list of hazardous materials contained at the facility.		

[1] Applies only where ground disturbance is expected (trenching, replacement poles and interset poles).
[2] COC = Conditions of Certification from the CEC Final License Decision for the Abengoa Mojave Solar Plant Project.
[3] SCE maintains responsibility for implementation of environmental protection measures, design measures, and best management practices for the Lockhart Substation and SPS Project, as described in Chapter 2.0 of the EA, including the CEC Final License Decision COCs, which are applicable to the Lockhart Substation.

Environmental Protection Measures, Design Measures, BMPs, and CEC Conditions	Responsible Party	
	Mojave Solar	SCE [3]
HAZ-2 The project owner shall provide a Hazardous Materials Business Plan (HMBP), a Spill Prevention, Control, and Countermeasure Plan (SPCC), and a Process Safety Management Plan (PSMP) to the San Bernardino County Fire Department and the CPM for review. After receiving comments from the San Bernardino County Fire Department and the CPM, the project owner shall reflect all final recommendations in the final documents. Copies of the final HMBP, SPCC, and PSMP shall then be provided to the San Bernardino County Fire Department for information and to the CPM for approval.	X-COC	X
Verification: At least 60 days prior to receiving any hazardous material on the site for commissioning or operations, the project owner shall provide a copy of a final Hazardous Materials Business Plan, Spill Prevention, Control, and Countermeasure Plan, and a Process Safety Management Plan to the CPM for approval.		
HAZ-3 The project owner shall develop and implement a Safety Management Plan for the delivery and handling of liquid hazardous materials. The plan shall include procedures, protective equipment requirements, training and a checklist. It shall also include a section describing all measures to be implemented to prevent mixing of incompatible hazardous materials. This plan shall be applicable during construction, commissioning, and operation of the power plant.	X-COC	X
Verification: At least sixty (60) days prior to the delivery of any liquid hazardous material to the facility, the project owner shall provide a Safety Management Plan as described above to the CPM for review and approval.		
HAZ-4 The project owner shall place an adequate number of isolation valves in the Heat transfer Fluid (HTF) pipe loops so as to be able to isolate a solar collector loop in the event of a leak of fluid. These valves shall be actuated automatically, manually, remotely, or locally as determined during detailed engineering design. The detailed engineering design drawings showing the number, location, and type of isolation valves shall be provided to the CPM for review and approval prior to the commencement of the solar array construction.	X-COC	
Verification: At least sixty (60) days prior to the commencement of solar array construction, the project owner shall provide the design drawings as described above to the CPM for review and approval.		
HAZ-5 Prior to commencing construction, a site-specific Construction Site Security Plan for the construction phase shall be prepared and made available to the CPM for review and approval. The Construction Security Plan shall include the following: 1. Perimeter security consisting of fencing enclosing the construction area; 2. Security guards;	X-COC	X

[1] Applies only where ground disturbance is expected (trenching, replacement poles and interset poles).
[2] COC = Conditions of Certification from the CEC Final License Decision for the Abengoa Mojave Solar Plant Project.
[3] SCE maintains responsibility for implementation of environmental protection measures, design measures, and best management practices for the Lockhart Substation and SPS Project, as described in Chapter 2.0 of the EA, including the CEC Final License Decision COCs, which are applicable to the Lockhart Substation.

Environmental Protection Measures, Design Measures, BMPs, and CEC Conditions	Responsible Party	
	Mojave Solar	SCE [3]
3. Site access control consisting of a check-in procedure or tag system for construction personnel and visitors; 4. Written standard procedures for employees, contractors and vendors when encountering suspicious objects or packages on site or off site; 5. Protocol for contacting law enforcement and the CPM in the event of suspicious activity or emergency; and 6. Evacuation procedures.		
Verification: At least thirty (30) days prior to commencing construction, the project owner shall notify the CPM that a site-specific Construction Security Plan is available for review and approval.		
HAZ-6 The project owner shall also prepare a site-specific security plan for the commissioning and operational phases that will be available to the CPM for review and approval. The project owner shall implement site security measures that address physical site security and hazardous materials storage. The level of security to be implemented shall not be less than that described below (as per NERC 2002). The Operation Security Plan shall include the following: 1. Permanent full perimeter fence or wall, at least eight feet high and topped with barbed wire or the equivalent; 2. Main entrance security gate, either hand operated or motorized; 3. Evacuation procedures; 4. Protocol for contacting law enforcement and the CPM in the event of suspicious activity or emergency; 5. Written standard procedures for employees, contractors, and vendors when encountering suspicious objects or packages on site or off site; A. A statement (refer to sample, Attachment A in Final License Decision), signed by the project owner certifying that background investigations have been conducted on all project personnel. Background investigations shall be restricted to determine the accuracy of employee identity and employment history and shall be conducted in accordance with state and federal laws regarding security and privacy; B. A statement(s) (refer to sample, Attachment B in Final License Decision), signed by the contractor or authorized representative(s) for any permanent contractors or other technical contractors (as determined by the CPM after consultation with the project owner), that are present at any time on the site to repair, maintain, investigate, or conduct any other technical duties involving critical components (as determined by the CPM after consultation with the project owner) certifying that	X-COC	X

[1] Applies only where ground disturbance is expected (trenching, replacement poles and interset poles).
[2] COC = Conditions of Certification from the CEC Final License Decision for the Abengoa Mojave Solar Plant Project.
[3] SCE maintains responsibility for implementation of environmental protection measures, design measures, and best management practices for the Lockhart Substation and SPS Project, as described in Chapter 2.0 of the EA, including the CEC Final License Decision COCs, which are applicable to the Lockhart Substation.

Environmental Protection Measures, Design Measures, BMPs, and CEC Conditions	Responsible Party	
	Mojave Solar	SCE [3]
background investigations have been conducted on contractors who visit the project site; 6. Site access controls for employees, contractors, vendors, and visitors; 7. A statement(s) (refer to sample, Attachment C in Final License Decision), signed by the owners or authorized representative of hazardous materials transport vendors, certifying that they have prepared and implemented security plans in compliance with 49 CFR 172.802, and that they have conducted employee background investigations in accordance with 49 CFR Part 1572, subparts A and B; 8. Closed circuit TV (CCTV) monitoring system, recordable, and viewable in the power plant control room and security station (if separate from the control room) with cameras able to pan, tilt, and zoom, have low-light capability, and are able to view the outside entrance to the control room and the front gate; and 9. Additional measures to ensure adequate perimeter security consisting of either: A. Security guard(s) present 24 hours per day, 7 days per week; **or** B. Power plant personnel on site 24 hours per day, 7 days per week, **and** the CCTV able to view 100% of the power block perimeters **or** breach detectors **or** on-site motion detectors along the entire solar array fence line. The project owner shall fully implement the security plans and obtain CPM approval of any substantive modifications to those security plans. The CPM may authorize modifications to these measures, or may require additional measures such as protective barriers for critical power plant components— transformers, gas lines, and compressors—depending upon circumstances unique to the facility or in response to industry-related standards, security concerns, or additional guidance provided by the U.S. Department of Homeland Security, the U.S. Department of Energy, or the North American Electrical Reliability Council, after consultation with both appropriate law enforcement agencies and the applicant.		
Verification: At least thirty (30) days prior to the initial receipt of hazardous materials on site, the project owner shall notify the CPM that a site-specific operations site security plan is available for review and approval. In the annual compliance report, the project owner shall include a statement that all current project employee and appropriate contractor background investigations have been performed, and that updated certification statements have been appended to the operations security plan. In the annual compliance report, the project owner shall include a statement that the operations security plan includes all current hazardous materials transport vendor certifications for security plans and employee background investigations.		

[1] Applies only where ground disturbance is expected (trenching, replacement poles and interset poles).
[2] COC = Conditions of Certification from the CEC Final License Decision for the Abengoa Mojave Solar Plant Project.
[3] SCE maintains responsibility for implementation of environmental protection measures, design measures, and best management practices for the Lockhart Substation and SPS Project, as described in Chapter 2.0 of the EA, including the CEC Final License Decision COCs, which are applicable to the Lockhart Substation.

Environmental Protection Measures, Design Measures, BMPs, and CEC Conditions	Responsible Party	
	Mojave Solar	SCE [3]
HAZ-7 The project owner shall ensure that all pipes carrying heat transfer fluid (HTF), all command and control systems, and the fire water loop that are required to cross Harper Lake Road or Lockhart Road will be placed underground for the crossing. The pipes and lines shall be installed in a protective structure underneath the road and the HTF pipes shall have expansion loops aboveground on either side of the road. The engineering design plans shall be provided to the CPM for review and approval prior to the commencement of the solar array construction.	X-COC	
Verification: At least sixty (60) days prior to the commencement of solar array piping construction, the project owner shall provide the design drawings as described above to the CPM for review and approval.		
PUBLIC HEALTH-1 The project owner shall develop and implement a Cooling Water Management Plan to ensure that the potential for bacterial growth in cooling water is kept to a minimum. The Plan shall be consistent with either Staff's "Cooling Water Management Program Guidelines" or with the Cooling Technology Institute's "Best Practices for Control of Legionella" guidelines but, in either case, the Plan must include sampling and testing for the presence of Legionella bacteria at least every six months. After two years of power plant operations, the project owner may ask the Compliance Project Manager (CPM) to reevaluate and revise the Legionella bacteria testing requirement.	X-COC	
Verification: At least 60 days prior to the commencement of cooling tower operations, the Cooling Water Management Plan shall be provided to the CPM for review and approval.		
WORKER SAFETY-1 The project owner shall submit to the Compliance Project Manager (CPM) a copy of the Project Construction Safety and Health Program containing the following: • A Construction Personal Protective Equipment Program; • A Construction Exposure Monitoring Program; • A Construction Injury and Illness Prevention Program; • A Construction heat stress protection plan that implements and expands on existing Cal OSHA regulations as found in 8 CCR 3395; • A Construction Emergency Action Plan; and • A Construction Fire Prevention Plan. The Personal Protective Equipment Program, the Exposure Monitoring Program, the Heat Stress Protection Plan, and the Injury and Illness Prevention Program shall be submitted to the CPM for review and approval concerning compliance of the program with all applicable safety orders. The Construction Emergency Action Plan and the Fire Prevention Plan shall be submitted to the San Bernardino County Fire Department	X-COC	X

[1] Applies only where ground disturbance is expected (trenching, replacement poles and interset poles).
[2] COC = Conditions of Certification from the CEC Final License Decision for the Abengoa Mojave Solar Plant Project.
[3] SCE maintains responsibility for implementation of environmental protection measures, design measures, and best management practices for the Lockhart Substation and SPS Project, as described in Chapter 2.0 of the EA, including the CEC Final License Decision COCs, which are applicable to the Lockhart Substation.

Environmental Protection Measures, Design Measures, BMPs, and CEC Conditions	Responsible Party	
	Mojave Solar	SCE [3]
(SBCFD) for review and comment prior to submittal to the CPM for approval.		
Verification: At least 30 days prior to the start of construction, the project owner shall submit to the SBCFD a copy of the Construction Fire Prevention Plan and Emergency Action Plan for review and comment and a copy of the Project Construction Safety and Health Program to the CPM for review and approval.		
WORKER SAFETY-2 The project owner shall submit to the CPM a copy of the Project Operations and Maintenance Safety and Health Program containing the following: • An Operation Injury and Illness Prevention Plan; • An Operation heat stress protection plan that implements and expands on existing Cal OSHA regulations (8 CCR 3395); • A Best Management Practices (BMP) for the storage and application of herbicides; • An Emergency Action Plan; • Hazardous Materials Management Program; • Fire Prevention Plan (8 Cal Code Regs. § 3221); and • Personal Protective Equipment Program (8 Cal Code Regs, §§ 3401—3411). The Operation Injury and Illness Prevention Plan, Emergency Action Plan, , Heat Stress Protection Plan, BMP for Herbicides, and Personal Protective Equipment Program shall be submitted to the CPM for review and comment concerning compliance of the programs with all applicable safety orders. The Fire Prevention Plan and the Emergency Action Plan shall also be submitted to the SBCFD for review and comment.	X-COC	X
Verification: At least 30 days prior to the start of commissioning, the project owner shall submit to the SBCFD the final Operations Fire Prevention Plan and Emergency Action for review and the final Project Operations and Maintenance Safety and Health Program to the CPM for approval.		
WORKER SAFETY-3 The project owner shall provide a site Construction Safety Supervisor (CSS) who, by way of training and/or experience, is knowledgeable of power plant construction activities and relevant laws, ordinances, regulations, and standards; is capable of identifying workplace hazards relating to the construction activities; and has authority to take appropriate action to assure compliance and mitigate hazards. The CSS shall: • Have overall authority for coordination and implementation of all occupational safety and health practices, policies, and programs; • Assure that the safety program for the project complies with Cal/OSHA and federal regulations related to power plant projects;	X-COC	X

[1] Applies only where ground disturbance is expected (trenching, replacement poles and interset poles).
[2] COC = Conditions of Certification from the CEC Final License Decision for the Abengoa Mojave Solar Plant Project.
[3] SCE maintains responsibility for implementation of environmental protection measures, design measures, and best management practices for the Lockhart Substation and SPS Project, as described in Chapter 2.0 of the EA, including the CEC Final License Decision COCs, which are applicable to the Lockhart Substation.

Environmental Protection Measures, Design Measures, BMPs, and CEC Conditions	Responsible Party	
	Mojave Solar	SCE [3]
• Assure that all construction and commissioning workers and supervisors receive adequate safety training; • Complete accident and safety-related incident investigations and emergency response reports for injuries and inform the CPM of safety-related incidents; and • Assure that all the plans identified in Conditions of Certification Worker Safety-1 and -2 are implemented, although the plans themselves may be administered by someone different (i.e. Plant Safety Representative or Designee).		
Verification: At least 60 days prior to the start of site mobilization, the project owner shall submit to the CPM the name and contact information for the Construction Safety Supervisor (CSS). The contact information of any replacement CSS shall be submitted to the CPM within one business day. • The CSS shall submit in the Monthly Compliance Report a monthly safety inspection report to include: • Record of all employees trained for that month (all records shall be kept on site for the duration of the project); • Summary report of safety management actions and safety-related incidents that occurred during the month; • Report of any continuing or unresolved situations and incidents that may pose danger to life or health; and • Report of accidents and injuries that occurred during the month.		
WORKER SAFETY-4 The project owner shall make payments to the Chief Building Official (CBO) for the services of a Safety Monitor based upon a reasonable fee schedule to be negotiated between the project owner and the CBO. Those services shall be in addition to other work performed by the CBO. The Safety Monitor shall be selected by and report directly to the CBO and will be responsible for verifying that the Construction Safety Supervisor, as required in Condition of Certification Worker Safety-3, and for implementing all appropriate Cal/OSHA and Energy Commission safety requirements. The Safety Monitor shall conduct on-site (including linear facilities) safety inspections at intervals necessary to fulfill those responsibilities.	X-COC	X
Verification: At least 60 days prior to the start of construction, the project owner shall provide proof of its agreement to fund the Safety Monitor services to the CPM for review and approval.		
WORKER SAFETY-5 The project owner shall ensure that a portable automatic external defibrillator (AED) is located on site during construction and operations and shall implement a program to ensure that workers are	X-COC	X

[1] Applies only where ground disturbance is expected (trenching, replacement poles and interset poles).
[2] COC = Conditions of Certification from the CEC Final License Decision for the Abengoa Mojave Solar Plant Project.
[3] SCE maintains responsibility for implementation of environmental protection measures, design measures, and best management practices for the Lockhart Substation and SPS Project, as described in Chapter 2.0 of the EA, including the CEC Final License Decision COCs, which are applicable to the Lockhart Substation.

Environmental Protection Measures, Design Measures, BMPs, and CEC Conditions	Responsible Party	
	Mojave Solar	SCE [3]
properly trained in its use and that the equipment is properly maintained and functioning at all times. During construction and commissioning, the following persons shall be trained in its use and shall be on site whenever the workers that they supervise are on site: the Construction Project Manager or delegate, the Construction Safety Supervisor or delegate, and all first responders who are certified in first aid and CPR requirements. During operations, all power plant employees shall be trained in its use. The training program shall be submitted to the CPM for review and approval.		
Verification: At least 30 days prior to the start of site mobilization, the project owner shall submit to the CPM proof that a portable automatic external defibrillator (AED) exists on site and a copy of the training and maintenance program for review and approval.		
WORKER SAFETY-6 The project owner shall either: (1) Reach an agreement with the San Bernardino County Fire Department (SBCFD) regarding funding of its project-related share of capital and operating costs to improve fire protection/emergency response infrastructure and provide appropriate equipment as mitigation of project-related impacts on fire protection/emergency response services within the jurisdiction; ***or*** (2) If no agreement can be reached, the project owner shall fund a study (the "independent fire needs assessment and risk assessment") conducted by an independent contractor who shall be selected by the project owner and approved by the CEC Compliance Project Manager (CPM), in consultation with San Bernardino County Fire Department, and fulfill all mitigation identified in the independent fire needs assessment and a risk assessment. The study will evaluate the project's proportionate funding responsibility for the above-identified mitigation measures, with particular attention to emergency response and equipment/staffing/location needs. Should the project owner pursue option (2), above, the study shall evaluate the following: (a) The project's proportionate (incremental) contribution to potential cumulative impacts on the SBCFD and the project allocated costs of enhanced fire protection/emergency response services including the fire response, hazardous materials spill/leak response, rescue, and emergency medical services necessary to mitigate such impacts; (b) The extent that the project's contribution to local tax revenue will reduce impacts on local fire protection and emergency response services; and (c) Recommend an amount of funding (and corresponding payment plan) that represents the project's proportional payment obligation for the above-identified mitigation measures. Compliance Protocols shall be as follows:	X-COC	X

[1] Applies only where ground disturbance is expected (trenching, replacement poles and interset poles).
[2] COC = Conditions of Certification from the CEC Final License Decision for the Abengoa Mojave Solar Plant Project.
[3] SCE maintains responsibility for implementation of environmental protection measures, design measures, and best management practices for the Lockhart Substation and SPS Project, as described in Chapter 2.0 of the EA, including the CEC Final License Decision COCs, which are applicable to the Lockhart Substation.

Environmental Protection Measures, Design Measures, BMPs, and CEC Conditions	Responsible Party	
	Mojave Solar	SCE [3]
(a) The study shall be conducted by an independent consultant selected by the project owner and approved by the CPM. The project owner shall provide the CPM with the names of at least three consultants, whether entities or individuals, from which to make a selection, together with statements of qualifications; (b) The study shall be fully funded by the project owner. (c) The project owner shall provide the protocols for conducting the independent study for review and comment by the SBCFD and review and approval by the CPM prior to the independent consultant's commencement of the study; (d) The consultant shall not communicate directly with the project owner or SBCFD without express prior authorization from the CPM. When such approval is given, the CPM shall be copied on any correspondence between or among the project owner, SBCFD, and the consultant (including emails) and included in any conversations between or among the project owner, SBCFD and consultant; and (e) The CPM shall verify that the study is prepared consistent with the approved protocols, ***or*** (3) If the project owner and SBCFD do not agree to the recommendations of the independent consultant's study, the Energy Commission or its designee shall, based on the results of the study and comments from the project owner and SBCFD, make the final determination regarding the funding to be provided to the SBCFD to accomplish the above-identified mitigation. No construction of permanent above-ground structures shall occur until funding of mitigation occurs pursuant to wither of the resolution options set forth above.		
Verification: At least five (5) days before construction of permanent aboveground structures, the project owner shall provide to the CPM: (1) A copy of the individual agreement with the SBCFD or, if the owner joins a power generation industry association, a copy of the group's bylaws and a copy of the group's agreement with the SBCFD; and evidence in each January Monthly Compliance Report that the project owner is in full compliance with the terms of such bylaws and/or agreement; ***or*** (2) A protocol, scope and schedule of work for the independent study and the qualifications of proposed contractor(s) for review and approval by the CPM; a copy of the completed study showing the precise amount the project owner shall pay for mitigation; and documentation that the amount has been paid. Annually thereafter, the owner shall provide the CPM with verification of funding to the SBCFD if annual payments were approved or recommended under either of the above-described funding resolution options.		

[1] Applies only where ground disturbance is expected (trenching, replacement poles and interset poles).
[2] COC = Conditions of Certification from the CEC Final License Decision for the Abengoa Mojave Solar Plant Project.
[3] SCE maintains responsibility for implementation of environmental protection measures, design measures, and best management practices for the Lockhart Substation and SPS Project, as described in Chapter 2.0 of the EA, including the CEC Final License Decision COCs, which are applicable to the Lockhart Substation.

Environmental Protection Measures, Design Measures, BMPs, and CEC Conditions	Responsible Party	
	Mojave Solar	SCE [3]
WORKER SAFETY -7 The project owner shall: Provide a $200,000 payment to San Bernardino County Fire Department prior to the start of construction. This funding shall off-set any initial funding required by WORKER SAFETY-6 above until the funds are exhausted. This offset will be based on a full accounting by the San Bernardino County Fire Department regarding the use of these funds.	X-COC	
Verification: At least five (5) days prior to the start of construction the project owner shall provide documentation of the payment described above to the CPM. The CPM shall adjust the payments initially required by WORKER SAFETY-6 based upon the accounting provided by the San Bernardino County Fire Department.		
WORKER SAFETY-8 The project owner shall develop and implement an enhanced Dust Control Plan that includes the requirements described in AQ-SC3 and additionally requires: i) Site worker use of dust masks (NIOSH N-95 or better) whenever visible dust is present; and ii) Implementation of enhanced dust control methods (increased frequency of watering, use of dust suppression chemicals, etc. consistent with AQ-SC4) immediately whenever visible dust comes from or onto the site.	X-COC	X
Verification: At least 60 days prior to the commencement of site mobilization, the enhanced Dust Control Plan shall be provided to the CPM for review and approval.		
WORKER SAFETY-9 The project owner shall participate in joint training exercises with the SBCFD. The project owner shall coordinate this training with other Energy Commission-licensed solar power plants within San Bernardino County such that this project shall host the annual training on a rotating yearly basis with the other solar power plants.	X-COC	X
Verification: At least 10 days prior to the start of commissioning, the project owner shall submit to the CPM proof that the joint training with the SBCFD is established and shall include the date, list of participants, training protocol, and location in the yearly compliance report to the CPM.		
WASTE-1 Prior to the removal of any underground storage tanks (USTs) found on site, the project owner shall submit a copy of the information typically required to obtain a permit to the San Bernardino County Fire Department for review and comment. The CPM and the San Bernardino County Fire Department must acknowledge receipt of the plans for the removal prior to CPM approval. The project owner shall obtain approval for removal of all located USTs from the CPM.	X-COC	X

[1] Applies only where ground disturbance is expected (trenching, replacement poles and interset poles).
[2] COC = Conditions of Certification from the CEC Final License Decision for the Abengoa Mojave Solar Plant Project.
[3] SCE maintains responsibility for implementation of environmental protection measures, design measures, and best management practices for the Lockhart Substation and SPS Project, as described in Chapter 2.0 of the EA, including the CEC Final License Decision COCs, which are applicable to the Lockhart Substation.

Environmental Protection Measures, Design Measures, BMPs, and CEC Conditions	Responsible Party	
	Mojave Solar	SCE [3]
Verification: No less than sixty (60) days prior to commencement of site mobilization, the project owner shall provide the plans to remove the underground storage tanks to the CPM for review and approval. The project owner shall inform the CPM via the monthly compliance report, of the data when all USTs were removed from the site.		
WASTE-2 The project owner shall obtain a hazardous waste generator identification number from the United States Environmental Protection Agency prior to generating any hazardous waste during project construction and operations.	X-COC	X
Verification: The project owner shall keep a copy of the identification number on file at the project site and provide documentation of the hazardous waste generation notification and receipt of the number to the CPM in the next scheduled Monthly Compliance Report after receipt of the number. Submittal of the notification and issued number documentation to the CPM is only needed once unless there is a change in ownership, operation, waste generation, or waste characteristics that requires a new notification to USEPA. Documentation of any new or revised hazardous waste generation notifications or changes in identification number shall be provided to the CPM in the next scheduled compliance report.		
WASTE-3 The project owner shall ensure that the Abengoa Mojave Solar One (AMS) Project site is properly characterized and remediated as necessary pursuant to LRWQCB or DTSC Voluntary Site Cleanup Programs. In no event shall project construction commence in areas requiring characterization and remediation until LRWQCB or DTSC, and CEC CPM have determined that all necessary remediation has been accomplished as necessary.	X-COC	X
Verification: The project owner shall submit to the CPM copies of all pertinent correspondence, work plans, agreements, and authorizations between the AMS Project and LRWQCB or DTSC regarding Voluntary Site Cleanup Program requirements and activities at the AMS project site. The CPM shall review and comment on the proposed Cleanup Program requirements and activities. At least 60 days prior to the start of site mobilization, the project owner shall provide to the CPM written notice from San LRWQCB/DTSC that the AMS site has been investigated and remediated, as necessary, for compliance with the Voluntary Cleanup Program.		
WASTE-4 If potentially contaminated soil is identified during site characterization, demolition, excavation, or grading at either the proposed site or linear facilities, as evidenced by discoloration, odor, detection by handheld instruments, or other signs, the professional engineer or professional geologist shall inspect the site, determine the need for sampling to confirm the nature and extent of contamination, and provide a	X-COC	X

[1] Applies only where ground disturbance is expected (trenching, replacement poles and interset poles).
[2] COC = Conditions of Certification from the CEC Final License Decision for the Abengoa Mojave Solar Plant Project.
[3] SCE maintains responsibility for implementation of environmental protection measures, design measures, and best management practices for the Lockhart Substation and SPS Project, as described in Chapter 2.0 of the EA, including the CEC Final License Decision COCs, which are applicable to the Lockhart Substation.

Environmental Protection Measures, Design Measures, BMPs, and CEC Conditions	Responsible Party	
	Mojave Solar	SCE [3]
written report to the project owner, LRWQCB/DTSC, and the CPM stating the recommended course of action. Depending on the nature and extent of contamination, the professional engineer or professional geologist shall have the authority to temporarily suspend construction activity at that location for the protection of workers or the public. If, in the opinion of the professional engineer or professional geologist, significant remediation may be required, the project owner shall contact the CPM and representatives of LRWQCB/DTSC for guidance and possible oversight.		
Verification: The project owner shall submit any final reports filed by the professional engineer or professional geologist to the CPM within 5 days of their receipt. The project owner shall notify the CPM within 24 hours of any orders issued to halt construction.		
WASTE-5 The project owner shall provide the resume of an experienced and qualified Professional Engineer or Professional Geologist, who shall be available for consultation during building removal, and soil excavation and grading activities, to the CPM for review and approval. The resume shall demonstrate experience in remedial investigation and feasibility studies. The registered professional engineer or geologist shall be given full authority by the project owner to oversee and modify earth-moving activities to prevent the release or disturbance of contaminated soil.	X-COC	X
Verification: At least 30 days before the start of site mobilization, the project owner shall submit the resume to the CPM for review and approval.		
WASTE-6 The project owner shall prepare a Construction Waste Management Plan for all wastes generated during construction of the facility, and shall submit the plan to the Compliance Project Manager (CPM) for review and approval. The plan shall contain, at a minimum, the following: • a description of all construction waste streams, including projections of frequency, amounts generated and hazard classifications; • a survey of structures to be demolished that identifies the types of waste to be managed; and • management methods to be used for each waste stream, including temporary on-site storage, housekeeping and best management practices to be employed, treatment methods, and companies providing treatment services, waste testing methods to assure correct classification, methods of transportation, disposal requirements and sites, and recycling and waste minimization/reduction plans.	X-COC	X
Verification: No fewer than 30 days before the start of site mobilization, the project owner shall submit the Construction Waste Management Plan to the CPM for approval.		

[1] Applies only where ground disturbance is expected (trenching, replacement poles and interset poles).
[2] COC = Conditions of Certification from the CEC Final License Decision for the Abengoa Mojave Solar Plant Project.
[3] SCE maintains responsibility for implementation of environmental protection measures, design measures, and best management practices for the Lockhart Substation and SPS Project, as described in Chapter 2.0 of the EA, including the CEC Final License Decision COCs, which are applicable to the Lockhart Substation.

Environmental Protection Measures, Design Measures, BMPs, and CEC Conditions	Responsible Party	
	Mojave Solar	SCE [3]
WASTE-7 During the construction and operation phase, the project owner shall maintain copies of the contracted waste and/or refuse haulers documentation of each waste load transferred from the construction site to a disposal site and/or recycling center. The project owner shall maintain the haulers lists of the names of permitted solid waste facilities or recycling centers locations receiving the project's construction waste, and copies of all weigh tickets.	X-COC	X
Verification: The project owner shall identify permitted solid waste facilities or recycling centers that receive construction waste and maintain copies of weigh tickets and manifests showing the type and volume of waste disposed. This information shall be maintained at the project site and made accessible to CPM and the San Bernardino County Environmental Health Service Department Solid Waste Program.		
WASTE-8 Prior to demolition of existing structures, the project owner shall complete and submit a copy of a MDAQMD Asbestos Demolition Notification Form to the CPM and the MDAQMD for approval. After receiving approval, the project owner shall remove all Asbestos Containing Material (ACM) from the site prior to demolition.	X-COC	X
Verification: No less than 60 days prior to commencement of structure demolition, the project owner shall provide the Asbestos Demolition Notification Form to the CPM for review and approval. The project owner shall inform the CPM via the monthly compliance report, of the data when all ACM is removed from the site.		
WASTE-9 The project owner shall prepare an Operation Waste Management Plan for all wastes generated during operation of the facility (including construction, operation and dismantling of the onsite manufacturing building) and shall submit the plan to the CPM for review and approval. The plan shall contain, at a minimum, the following: • a detailed description of all operation and maintenance waste streams, including projections of amounts to be generated, frequency of generation, and waste hazard classifications; • management methods to be used for each waste stream, including temporary on-site storage, housekeeping and best management practices to be employed, treatment methods and companies providing treatment services, waste testing methods to ensure correct classification, methods of transportation, disposal requirements and sites, and recycling and waste minimization/source reduction plans; • information and summary records of conversations with the local Certified Unified Program Agency and the Department of Toxic Substances Control regarding any waste management requirements necessary for project activities. Copies of all required waste management permits, notices, and/or	X-COC	X

[1] Applies only where ground disturbance is expected (trenching, replacement poles and interset poles).
[2] COC = Conditions of Certification from the CEC Final License Decision for the Abengoa Mojave Solar Plant Project.
[3] SCE maintains responsibility for implementation of environmental protection measures, design measures, and best management practices for the Lockhart Substation and SPS Project, as described in Chapter 2.0 of the EA, including the CEC Final License Decision COCs, which are applicable to the Lockhart Substation.

Environmental Protection Measures, Design Measures, BMPs, and CEC Conditions	Responsible Party	
	Mojave Solar	SCE [3]
authorizations shall be included in the plan and updated as necessary; • a detailed description of how facility wastes will be managed and any contingency plans to be employed, in the event of an unplanned closure or planned temporary facility closure; and • a detailed description of how facility wastes will be managed and disposed upon closure of the facility.		
Verification: The project owner shall submit the Operation Waste Management Plan to the CPM for approval no less than 30 days prior to the start of project operation. The project owner shall submit any required revisions to the CPM within 20 days of notification from the CPM that revisions are necessary. The project owner shall also document in each Annual Compliance Report the actual volume of wastes generated and the waste management methods used during the year; provide a comparison of the actual waste generation and management methods used to those proposed in the original Operation Waste Management Plan; and update the Operation Waste Management Plan, as necessary, to address current waste generation and management practices.		
WASTE-10 The project owner shall submit to the CPM and DTSC for approval the Applicant's assessment of whether the HTF contaminated soil is considered hazardous or non-hazardous under state regulations. HTFcontaminated soil that exceeds the hazardous waste levels must be disposed of in accordance with California Health and Safety Code (HSC) Section 25203. HTF-contaminated soil that does not exceed the hazardous waste levels may be discharged into the land treatment unit. For discharges into the land farm, the project owner shall comply with the Waste Discharge Requirements contained within in the Soil & Water Resources section of this Decision.	X-COC	
Verification: The project owner shall document all releases and spills of HTF as described in Condition of Certification WASTE-9 and as required in the Soil & Water Resources section of this Decision. Cleanup and temporary staging of HTF-contaminated soils shall be conducted in accordance with the approved Operation Waste Management Plan required in Condition of Certification of WASTE-6. The project owner shall sample HTF-contaminated soil in accordance with the United States Environmental Protection Agency's (USEPA) current version of "Test Methods for Evaluating Solid Waste" (SW-846). Samples shall be analyzed in accordance with USEPA Method 1625B or other method to be reviewed and approved by DTSC and the CPM. Within 28 days of an HTF spill the project owner shall provide the results of the analyses and their assessment of whether the HTF-contaminated soil is considered hazardous or non-hazardous to DTSC and the CPM for review and approval.		

[1] Applies only where ground disturbance is expected (trenching, replacement poles and interset poles).
[2] COC = Conditions of Certification from the CEC Final License Decision for the Abengoa Mojave Solar Plant Project.
[3] SCE maintains responsibility for implementation of environmental protection measures, design measures, and best management practices for the Lockhart Substation and SPS Project, as described in Chapter 2.0 of the EA, including the CEC Final License Decision COCs, which are applicable to the Lockhart Substation.

Environmental Protection Measures, Design Measures, BMPs, and CEC Conditions	Responsible Party	
	Mojave Solar	SCE [3]
If DTSC and the CPM determine the HTF-contaminated soil is considered hazardous it shall be disposed of in accordance with California Health and Safety Code (HSC) Section 25203 and procedures outlined in the approved Operation Waste Management Plan required in Condition of Certification WASTE-9 and reported to the CPM in accordance with Condition of Certification WASTE-12. If DTSC and the CPM determine the HTF-contaminated soil is considered nonhazardous it shall be retained in the land farm and treated on-site in accordance with the Waste Discharge Requirements contained in the Soil & Water Resources section of this Decision.		
WASTE-11 The project owner shall ensure that the cooling tower basin sludge is tested pursuant to Title 22, California Code of Regulations, and section 66262.10 and report the findings to the CPM. The handling, testing, and disposal methods for sludge shall be identified in the Operation Waste Management Plan required in Condition of Certification WASTE-9.	X-COC	
Verification: The project owner shall report the results of filter cake testing to the CPM within 30 days of sampling. If two consecutive tests show that the sludge is non-hazardous, the project owner may apply to the CPM to discontinue testing. The test results and method and location of sludge disposal shall also be reported in the Annual Compliance Report required in Condition of Certification WASTE-9.		
WASTE-12 The project owner shall ensure that all spills or releases of hazardous substances, materials, or waste are reported, cleaned up, and remediated as necessary, in accordance with all applicable federal, state, and local requirements.	X-COC	X
Verification: The project owner shall document all unauthorized releases and spills of hazardous substances, materials, or wastes that are in excess of reportable quantities (RQs) that occur on the project property or transmission corridors during construction and on the project property during operation. The documentation shall include, at a minimum, the following information: • location of release; • date and time of release; • reason for release; • volume released; • amount of contaminated soil/material generated; • how release was managed and material cleaned up; • if the release was reported; • to whom the release was reported;		

[1] Applies only where ground disturbance is expected (trenching, replacement poles and interset poles).
[2] COC = Conditions of Certification from the CEC Final License Decision for the Abengoa Mojave Solar Plant Project.
[3] SCE maintains responsibility for implementation of environmental protection measures, design measures, and best management practices for the Lockhart Substation and SPS Project, as described in Chapter 2.0 of the EA, including the CEC Final License Decision COCs, which are applicable to the Lockhart Substation.

Environmental Protection Measures, Design Measures, BMPs, and CEC Conditions	Responsible Party	
	Mojave Solar	SCE [3]
• release corrective action and cleanup requirements placed by regulating agencies; • level of cleanup achieved and actions taken to prevent a similar release or spill; and • disposition of any hazardous wastes and/or contaminated soils and materials that may have been generated by the release. Copies of the unauthorized spill documentation shall be provided to the CPM within 30 days of the date the release was discovered.		

[1] Applies only where ground disturbance is expected (trenching, replacement poles and interset poles).
[2] COC = Conditions of Certification from the CEC Final License Decision for the Abengoa Mojave Solar Plant Project.
[3] SCE maintains responsibility for implementation of environmental protection measures, design measures, and best management practices for the Lockhart Substation and SPS Project, as described in Chapter 2.0 of the EA, including the CEC Final License Decision COCs, which are applicable to the Lockhart Substation.

This page intentionally left blank.

APPENDIX T

PUBLIC AGENCY COMMENTS ON THE DRAFT EA AND RESPONSES TO COMMENTS

UNITED STATES ENVIRONMENTAL PROTECTION AGENCY
REGION IX
75 Hawthorne Street
San Francisco, CA 94105-3901

MAY 0 3 2011

Carol Hammel-Smith
Department of Energy, Office of Loan Programs
1000 Independence Ave. SW, Rm 4B-196
Washington, DC 20585

Subject: Abengoa Mojave Solar Project Draft Environmental Assessment (DEA), San Bernardino County, California

Dear Ms. Hammel-Smith:

The U.S. Environmental Protection Agency (EPA) has reviewed the Draft Environmental Assessment (DEA) for the proposed Abengoa Mojave Solar Project. Our review and comments are provided pursuant to the National Environmental Policy Act (NEPA) and the Council on Environmental Quality (CEQ) Regulations (40 CFR Parts 1500-1508).

EPA's detailed comments are attached and provide specific recommendations regarding analyses and documentation that should be considered prior to making a determination regarding the significance of potential impacts from the proposed solar parabolic trough power plant project. This additional analysis and documentation will assist the Department of Energy (DOE) and Bureau of Land Management (BLM) in determining whether a "Finding of No Significant Impact" can be supported at the completion of the Final Environmental Assessment (FEA). EPA has concerns about the proposed project's potential direct impacts on public safety, and the limited number of alternatives analyzed. Specifically, EPA continues to recommend the use of dry cooling technology for the proposed project. This is especially important given the areas historical loss of groundwater and projected number of additional future projects that may further reduce groundwater resources in the area. We appreciate the opportunity to review this DEA and are available to discuss our comments. When the FEA is released for public review, please send one hard copy and one electronic copy to the address above (mail code: CED-2). If you have any questions, please contact Scott Sysum, the lead reviewer for this project, at (415) 972-3742 or sysum.scott@epa.gov. EPA-1

Sincerely,

Connell Dunning

For Kathleen M. Goforth, Manager
Environmental Review Office
Communities and Ecosystems Division

Enclosure: EPA's Detailed Comments

cc: Edy Seehafer, BLM

US EPA DETAILED COMMENTS ON THE DRAFT ENVIRONMENTAL ASSESSMENT (DEA) FOR THE ABENGOA MOJAVE SOLAR PROJECT IN SAN BERNARDINO COUNTY, CA, MAY 4, 2011

The U.S. Environmental Protection Agency (EPA) understands that the Department of Energy (DOE) and Bureau of Land Management (BLM) intend to prepare a Final Environmental Assessment (FEA) and a finding of no significant impact (FONSI) for the Abengoa Mojave Solar Project (AMSP). EPA recommends that the FEA provide additional analyses, include supporting documentation, and identify specific minimization or mitigation measures to support a FONSI as detailed below. EPA-1 cont.

Emergency Planning and Community Right-to-Know Act and CAA §112(r)

The AMSP will use hazardous materials during construction and operation, including natural gas, Heat Transfer Fluid (Therminol VP-1 or equivalent), and petroleum. The AMSP will have to comply with CAA §112(r), and, as applicable, Emergency Planning and Community Right-to-Know Act (EPCRA) § 303, 311, & 312. Additionally the requirements of the California Hazardous Materials Business Plan (CA HMBP) and California Aboveground Petroleum Storage Act (ASPA) regulations would apply. EPA-2

Recommendation:
The FEA should discuss compliance with CAA §112(r), EPCRA §§ 303, 311, 312, CA HMBP, and California APSA.

Groundwater Resources

To reduce environmental impacts, EPA continues to recommend technologies which conserve water as a key criterion for renewable energy projects currently under review by our agency. The AMSP proposes to use wet cooling towers for power plant cooling. According to the DEA, the project proponent owns adjudicated water rights to the Harper Valley Groundwater Basin administered by the Mojave Water Agency. The AMSP proposes to utilize 2,163 acre-feet of water per year, for 30 years. The AMSP, through ownership or purchase options, has rights to 10,478 acre-feet of water per year from the adjudicated basin. EPA-3

The groundwater table in the Harper Dry Lake area has been subjected to decades of water extraction for agricultural irrigation purposes causing the groundwater level below Harper Dry Lake to decline significantly. USGS records indicate that groundwater levels west of Harper Dry Lake fell drastically from 1919 to 1986 (16 feet below ground surface (bgs) in 1919, 95 feet bgs in 1953, 157 feet bgs in 1979, and 183 feet in 1986)[1]. In addition to the AMSP, solar and wind projects are proposed on approximately 553,000 acres of BLM land and 13,900 acres of non-federal land in the Western Mojave Planning Area[2]. Cumulatively, these projects may further stress groundwater resources in the project vicinity.

[1] California Energy Commission, "Abengoa Mojave Solar, Application for Certification (09-AFC-5) San Bernardino County," CEC-700-2010-003, CEC Staff Report, March 2010.
[2] Ibid., p. 4-4

The proposed project's use of wet cooling is inconsistent with the recommendations of the "Best Management Practices and Guidance Manual: Desert Renewable Energy Projects," which was jointly developed by the Bureau of Land Management (BLM), the U.S. Fish and Wildlife Service (USFWS), the California Energy Commission, and others[3]. That manual states, "Given scarce water resources in the desert region use of dry cooling technologies for power plant cooling is encouraged and preferred. To the extent that water is proposed for power plant cooling, conduct an analysis to demonstrate that alternative water supply sources and alternative cooling technologies are environmentally undesirable or economically unsound. It is recommended the analysis identify land use, electricity efficiency, and other tradeoffs associated with the proposed cooling technology. See Appendix B under Solar and Geothermal for discussions on such tradeoffs. Developers are advised that agencies may condition such project permits/authorizations with water conservation offset mitigation measures."

Many projects have adopted less water intensive technology and EPA is aware of at least three solar thermal projects (Blythe, Palen and Desert Sunlight Solar Projects) that propose the use of dry cooling in the same general area with a similar climate as the proposed project, and have similar if not identical efficiency losses from using dry cooling. Additionally, the Final Staff Assessment for the Beacon Solar Energy Project found that dry cooling was economically feasible because it surpassed the benchmark internal rate of return established for economic feasibility. EPA-3 cont.

Recommendations:
EPA recommends that DOE reconsider the decision to use groundwater and wet cooling versus dry cooling. The FEA should include a discussion comparing the impacts of each technology, all conservation measures to be implemented with wet cooling, and all costs associated with dry cooling. EPA supports the BLM, USFWS, and CEC guidance stating that use of dry cooling technologies in desert regions is encouraged and preferred.

The FEA should address what measures would be taken, and by whom, should groundwater resources in the basins become overextended to the point that further curtailment is necessary due to, for example, additional growth, the influx of large-scale solar projects, drought, and the utilization of existing or pending water rights in the basin.

Hazardous Materials, Waste Management and Public Health and Safety

Section 3.12, Public Health and Safety, discusses the regulatory framework provided by the Occupational Safety and Health Act (OSHA), Resource Conservation and Recovery Act (RCRA) and Comprehensive Environmental Response, Compensation, and Liability Act (CERCLA). The DEA indicates that various public health and safety factors were considered including: construction-related impacts (worker safety, transportation, and storage of hazardous materials), presence of hazardous materials on the site, and long-term operational issues such as EPA-4

[3] Renewable Energy Action Team (California Energy Commission, California Department of Fish and Game, U.S. Department of Interior Bureau of Land Management and Fish and Wildlife Service). REAT-1000-2010-009-F of Dec 2010

employee safety, emissions from the AMSP that could harm the public and storage of hazardous materials onsite (pg. 3.12-2).

In addition, the DEA discusses hazardous waste as well as the California Accidental Release Program regulations and CFR Title 40 Part 68 under the CAA which establish emergency response planning requirements for acutely hazardous materials (pg. 3.12-7). Where applicable, these regulations require preparation of a Risk Management Plan, which is a comprehensive program to identify hazards and predict the areas that may be affected by a release of a program-listed hazardous material. Under a listing of permits and approvals, it is also mentioned that the San Bernardino County Fire Department will require a Hazardous Materials Business Plan (pg. 2-32). EPA-4 cont.

Neither the DEA nor the appendices contain the California Energy Commissions Conditions of Certification that address the various regulations and requirements for hazardous materials, worker safety or emergency response.

Recommendation:
EPA recommends the FEA contain separate sections for hazardous materials, waste management, and worker health and safety. Applicable mitigation measures should be incorporated as part of the California Energy Commission's Conditions of Certification for the project.

Environmental Protection Measures, Design Measures, BMPs, and Conditions of Certification

Mojave Solar submitted an Application for Certification (AFC) for the AMSP to the California Energy Commission (CEC) on August 10, 2009. CEC issued the final CEC License Decision ("CEC Decision") on September 8, 2010. The CEC Decision, including the Conditions of Certification (COCs), was taken into account in preparation of this EA. The DEA indicates that all CEC COCs have been incorporated (pg. 1-1). EPA-5

A FONSI determination may be dependent on the mitigation measures employed to minimize any impacts to an acceptable and less than significant level. The CEC COCs for Public Safety, Worker Safety, Transportation and Hazardous Materials were not found in the DEA.

Recommendation:
The FEA should include all CEC health and safety related COCs in appendix S and discuss whether or not these COCs support a determination of a FONSI.

Alternatives Analysis

The Council on Environmental Quality (CEQ) regulations for implementing the National Environmental Policy Act (NEPA) at 40 CFR 1508.9 presents the following guidelines for an environmental assessment (EA): EPA-6

(a) Means a concise public document for which a Federal agency is responsible that serves to:

(1) Briefly provide sufficient evidence and analysis for determining whether to prepare an environmental impact statement or a finding of no significant impact.
(2) Aid an agency's compliance with the Act when no environmental impact statement is necessary.
(3) Facilitate preparation of a statement when one is necessary.
(b) Shall include brief discussions of the need for the proposal, of alternatives as required by section 102(2)(E), of the environmental impacts of the proposed action and alternatives, and a listing of agencies and persons consulted.

NEPA §102(2)(E) further states that all agencies of the Federal Government shall -- study, develop, and describe appropriate alternatives to recommended courses of action in any proposal which involves unresolved conflicts concerning alternative uses of available resources.

The alternatives section should rigorously explore and objectively evaluate all reasonable alternatives, and for alternatives which were eliminated from detailed study, briefly describe the reasons for their having been eliminated.

EPA-6 cont.

The DEA for the Project evaluates only the no action alternative and the proposed action (p. 2-33). No other alternatives are carried forward in the document. Three alternatives sites were discussed, but were eliminated from detailed analysis because they were technically infeasible due to the lack of land available for purchase or lease (site control). While the DEA includes a discussion of some of the reasons for their elimination, it does not identify a clear set of quantitative criteria that were used to screen all alternatives in a similar manner.

Recommendations:
The FEA should provide a clear discussion of the reasons for the elimination of alternatives that are not evaluated in detail, and provide a clear set of quantitative criteria to screen all alternatives. The potential environmental impacts of each alternative should be quantified to the greatest extent possible (e.g., acres of wetlands impacted, tons per year of emissions produced, etc.). For example, the FEA should include a matrix that rates each of the alternatives on each of the selection criteria. Quantitative values should be included wherever practicable.

Incorporate an "environmentally preferable alternative" in addition to the proposed action and no action alternative. For example, as recommended above, a 'dry-cooling' alternative should be considered to avoid impacts to aquatic resources to the maximum extent possible.

Document Readability and Miscellaneous Edits

EPA-7

The appendices to the document are 1,794 pages long. The page numbering for the appendices is inconsistent. The appendices are not sequentially page numbered, appear to be a compilation of various reports, and are difficult to navigate. The DEA document has a table of contents that is linked to the page, so that you can easily move to a section via the link. The appendices table of contents is not linked to the start of each appendix.

Recommendation:
The FEA should include a page numbering scheme for the appendices that is consistent. Either the appendices should be page numbered consecutively with the text of the FEA or each appendix sequentially page numbered (e.g. A-1, A-2, A-3, etc). Additionally a page linked table of contents should be included in order to improve readability and usability. Consideration should be given to reducing some of the content of the appendices so as to avoid the accumulation of extraneous background data. EPA-7 cont.

On page 2-32 the DEA states, "In 2006, Mojave Solar conducted a site selection analysis to identify the appropriate location for the AMSP in California. Mojave Solar considered the following criteria during site selection: (1) incoming solar radiation (insulation) value commensurate with a solar thermal project, (2) minimal slope, (3) proximity to transportation corridors, (4) water availability, (5) previously disturbed land, (6) proximity to the electric transmission grid, and (7) availability of the land for purchase or lease (site control)." EPA-8

Recommendation:
The FEA should replace (insulation) with (insolation).

On page 3.12-5 the DEA states, "A Phase I Environmental Site Assessment was performed in 2009 for the AMSP/Lockhart Substation site in accordance with generally and currently accepted environmental engineering principles and practices (American Society of Testing Materials Standard E 1527-05)" EPA-9

Recommendation:
The American Society for Testing and Materials has changed its name to ASTM International. The text should read (ASTM International Standard E 1527-05).

RESPONSES TO COMMENTS

U.S. Environmental Protection Agency, Region IX, May 3, 2011

Comment EPA-1: ***EPA states that they appreciate the opportunity to review the Draft EA and are available to discuss their comments. When the Final EA is released for public review, they request that one hard copy and one electronic copy be provided.***

Response EPA-1:
DOE will supply EPA with one hard copy and one electronic copy of the Final EA, per your request.

Comment EPA-2: ***EPA comments that the Final EA should discuss compliance with the CAA (§ 112(r)), the Emergency Planning and Community Right-to-Know Act (§ 303, 311, 312), the California Hazardous Materials Business Plan and the California Aboveground Petroleum Storage Act.***

Response EPA-2:
The EA has been expanded to include additional information about project compliance with CAA §112(r), Emergency Planning and Community Right-to-Know Act § 303, 311 and 312, the California Hazardous Materials Business Plan and California Aboveground Petroleum Storage Act regulations. Refer to additional text added to Section 3.12, specifically Sections 3.12.1.3 through 3.12.1.6, as well as the additional materials added to Appendix P.

Comment EPA-3: ***EPA recommends that DOE reconsider the decision the use groundwater and wet-cooling versus dry-cooling. The Final EA should address what measures would be taken, and by whom, should groundwater resources in the basin become overextended to the point that further curtailment is necessary.***

***Response EPA-3*:**
The EA has been expanded to include additional information about dry-cooling versus wet-cooling technologies (see Section 2.3, Alternatives Considered by Eliminated), protection of the aquifer levels by the Mojave Water Agency (MWA) (see Section 3.7, Water Resources), and cumulative water use analysis (see Summary).

In the event that groundwater resources in the basins become overextended, MWA has the authority to regulate groundwater pumping to ensure protection of the aquifer. MWA reviews all proposed projects for potential impact on groundwater resources and existing groundwater users.

The proposed Mojave Solar Project (MSP) is located in the Harper Valley Groundwater Basin, a part of the Centro Subarea in the Mojave River Groundwater Basin.

The Mojave River Groundwater Basin is an "adjudicated" basin. The adjudication decision protects the basin by empowering the Mojave Water Agency (MWA) as the basin "Watermaster" to regulate groundwater pumping to ensure protection of the aquifer. The MWA performs this function by annually adjusting individual groundwater pumping rights to reflect changes in recharge and other factors affecting the basin. In 1996, the MWA imposed a 20% "ramp-down" on all water users to aid in the recovery of the basin. The ramp-down reduced the water use by 80% of its historic Base Annual Production.

As part of the Application for Certification process with the California Energy Commission (CEC), the MSP and CEC worked with the MWA to establish water use metrics for the Harper Valley Groundwater Basin both prior to and during Project operation. The results of the effort established:

- The Base Annual Production (BAP) for the Harper Valley Groundwater Basin is 12,542 acre-feet per year (AF/y). This value is based on the verified maximum annual volume of production by all producers in the sub-basin during the period from 1986 to 1990 (Abengoa Mojave Solar Plant Licensing Case, Docket #09—AFC-5, CEC Final Commission Decision, Soil and Water Table 1, *Water Allowance and Use in the Harper Lake Area*, p. 312);
- MWA established a twenty percent "ramp-down" factor for BAP to protect and restore the aquifer. This value (10,036 AF/y) is the Free Production Allowance (FPA);
- Through the use of modeling and groundwater level monitoring, MWA has established a Production Safe Yield for the Harper Valley Groundwater Basin of 4,144 AF/y (Id.). This is the calculated highest annual production that will not result in the long-term decline in water levels;
- The impact of the MSP can be ascertained by considering the basin's 2007/2008 groundwater production of 1,731 AF/y and combining it with the MSP proposed maximum pumping volume of 2,160 AF/y. The combined figures result in a total volume of 3,891 AF/y of groundwater produced from the Harper Valley Groundwater Basin compared with the Production Safe Yield of 4,144 AF/y (leaving a remaining surplus of 253 AF/y) (Id.);
- As part of the cumulative impacts study on future water use in the Harper Valley Groundwater Basin, the MSP and CEC identified four proposed projects that could require up to an additional 60 AF/y of groundwater from the basin. In consideration of these projects, this would still leave approximately 193 AF/y of surplus. (Id.)
- As a condition of its CEC permit, the MSP is required to develop a groundwater monitoring program that will address groundwater quantity and quality. CEC has

established requirements for mitigation if observed conditions are not consistent with the expected metrics.

DOE has reviewed the supporting documentation central to CEC's findings and decision. DOE is confident that CEC's consideration of future groundwater resources and potential impacts has been thorough.

Comment EPA-4: ***EPA recommends that the Final EA contain separate sections for hazardous materials, waste management, and worker health and safety. Applicable mitigation measures should be incorporated as part of the California Energy Commission's Conditions (COCs) of Certification for the project.***

Response EPA-4:

All of the applicable analyses for hazardous materials management and safety, waste management, and worker health and safety are included in Section 3.12 of the Draft EA. These topical areas are addressed in their respective subsections within Section 3.12.

The public health and safety measures associated with the proposed Abengoa Mojave Solar Plant that were included in the final CEC License Decision are referred to in Section 3.12 of the Final EA. The complete list of public health and safety Conditions of Certification have been added to the list of measures in Appendix S of the Final EA. Further clarification and reference to those measures have been added to Section 3.12.4 of the Final EA.

Comment EPA-5: ***EPA comments that the California Energy Commission Conditions of Certification were not included in the Draft EA or in the appendices, and recommends that the Final EA contain separate sections for hazardous materials, waste management, and worker health and safety.***

Response EPA-5:

The public health and safety measures associated with the proposed Abengoa Mojave Solar Plant included in the final CEC License Decision are now referred to in Section 3.12 of the Final EA. The complete list of Conditions of Certification has been added to the list of Public Health and Safety measures in Appendix S of the Final EA. Further clarification and reference to those measures have been added to Section 3.12.4 of the Final EA.

Comment EPA-6: ***EPA comments that §102(2) (E) states that appropriate alternatives should be analyzed to recommend courses of action if unresolved conflicts exist concerning alternative uses of available resources. EPA recommends that the Final EA provide a clear discussion of the reasons for the elimination of alternatives not evaluated in detail, and incorporate an "environmentally preferable alternative."***

***EPA-6 Response*:**

The Final EA has been expanded to include additional detail on the groundwater analysis conducted during the CEC licensing process. The evaluation shows that the Production Safe Yield would not be exceeded when the current production of Harper Valley Groundwater Basin is combined with the proposed Project's water use. Further, as discussed below, a surplus would exist after considering cumulative groundwater use. See Final EA Sections 2.3 and 3.7.

Analyzed Alternatives. The Council of Environmental Quality (CEQ) has stated its position regarding the requirement of 102(2) (E) and the need for alternatives analysis in EAs on a number of occasions: "CEQ maintains that alternatives, other than the preferred alternative and no-action alternative, do not require analysis and documentation in an EA unless an unresolved conflict, consistent with NEPA Section 102(2)(E) and 40 CFR 1501.2(c), exists." (CEQ, NEPA Task Force, Modernizing NEPA Implementation, September 2003, pp. 70-71).

DOE has not identified any unresolved conflicts concerning alternative uses of available resources. The only affected resource that has been suggested to have an alternative use is groundwater. As noted in previous responses to comments, the CEC conducted an exhaustive assessment of groundwater uses in the Harper Valley Groundwater Basin. Alternative uses could include agricultural irrigation, industrial use or replenishment of wetlands. The water use associated with the proposed action will be substantially less than the water volume historically used for irrigation purposes on the site. Agricultural uses of groundwater in the project area have been declining over the past 20 years, and groundwater levels have been increasing as a result.[1] As was concluded by the CEC and previously discussed, the proposed groundwater use for wet-cooling will not adversely impact groundwater levels, the basin balance, or the quality of groundwater in the basin (Abengoa Mojave Solar Power Plant Licensing Case, Docket # 09-AFC-5, CEC Commission Decision, Finding of Fact # 4 p. 331). This trend is projected to continue during project construction and operation.

The only wetland feature in the Proposed Site/Lockhart Substation study area is a lacustrine marsh located at the southwestern edge of Harper Dry Lake. The marsh has been artificially maintained with groundwater pumped by BLM from a former irrigation well. Condition of certification **BIO-20** in the CEC license for the project will ensure that this delivery of groundwater will continue into the future as part of the proposed action.

[1] For the 2007 to 2008 period, verified water use in the basin had dropped to 1,731 AF/y. The 10,811 AF/y decline in water use over the almost 20-year period is directly related to a decline of agricultural activity (CEC Final Commission Decision Soil and Water Table 1, *Water Allowance and Use in the Harper Lake Area*, p. 312).

Consequently, groundwater use in the Harper Valley Groundwater Basin, a brackish water resource, is not in conflict with the proposed use for the MSP. Therefore, DOE does not believe an associated analysis of alternatives is warranted or required per NEPA 102(2) (E).

Alternatives Eliminated. In 2006, MSP conducted a site selection analysis to identify the appropriate location for the project site in California. MSP considered a clear set of criteria for site selection, including: (1) incoming solar radiation (insolation) value commensurate with a solar thermal project; (2) minimal slope; (3) proximity to transportation; (4) water availability; (5) previously disturbed land; (6) proximity to the electric transmission grid, and (7) availability of the land for purchase or lease (site control). (Draft EA, pp. 2-32.)

Additionally, Abengoa Solar set out to minimize environmental effects through site selection. (See discussion in Final EA Section 2.3.) Alternative sites were screened by assessing biological, cultural and paleontological resources, water resources, traffic and transportation, and visual resources. Alternatives that could not avoid or substantially lessen potential impacts in these areas were dropped from further analysis.

Sites examined included Superior Dry Lake, Coyote Dry Lake, Bristol Dry Lake, Imperial Valley, Imperial Valley East, and Northwest of Blythe. Of these sites, four (Superior Lake, Bristol Lake, Imperial Valley East, and Northwest of Blythe) were characterized by large undisturbed areas, thereby increasing the likelihood of biological impacts. Another site (Coyote Lake) had less undisturbed area, but was not well-suited for development topographically. (Abengoa Mojave Solar Power Plant Licensing Case, Docket # 09-AFC-5, Applicant Opening Testimony, June 3, 2010, pp. 179 – 180).

During the site selection process, technology alternatives were also considered. In addition to wet-cooling, a dry-cooling alternative and a hybrid wet-dry cooling alternative were also considered.

After this evaluation, the Hinkley, California site was deemed to be an ideal location for the proposed plant. Subsequent to the purchase of the land, MSP conducted an alternatives analysis that examined project site layout. A preliminary screening of four sites, including the proposed site, was conducted. The three alternatives (Areas A, B, and C) are discussed further below:

- Area A: This layout included land to the west of Harper Lake Road, abutting SEGS VIII and IX on its northern border, with the western boundary approximately 2.5 miles west of Harper Lake Road and the southern boundary mostly coincident with Lockhart Ranch Road. Area A was found to be technically infeasible and was eliminated from further analysis because of a lack of site control. In addition, this site would result in similar but greater impacts compared to the MSP site. The western half includes undisturbed land

that contains desert tortoise and western burrowing owl sign identified during a survey conducted in 2008.

- Area B: This layout included land to the east of Harper Lake Road and south of Lockhart Ranch Road. Area B would span approximately 2.5 miles east to west and would abut the existing Coolwater-Kramer No. 1 and No. 2 transmission line corridors along its southern boundary. However, Area B was considered technically infeasible and was eliminated from further analysis due to a lack of site control. Environmental impacts would be greater than those on the proposed site since the eastern half includes undisturbed land that contains desert tortoise and western burrowing owl sign identified during a survey conducted in 2008.

- Area C: This layout includes land to the north of Lockhart Ranch Road and to the east of Harper Lake Road. Area B would span approximately 2.5 miles north to south and would abut SEGS VIII and IX on the western boundary. Area C was also considered technically infeasible and was eliminated from further analysis due to a lack of site control.

Abengoa identified the proposed project site as the optimal location for the solar thermal plant, because it was the only site with optimal proportion (length of property compared to width of property) for development, and availability for purchase or lease. Also, because the site consisted primarily of fallow agricultural lands, impacts to native habitat and sensitive desert resources would be minimized. (Draft Abengoa EA, pp. 2-33).

No alternative locations were identified for the proposed fiber-optic lines since the MSP and Lockhart Substation need to connect to existing substations in the area, and existing utility corridors and poles already exist between the proposed site and the various substations. It was determined that the optimal location for the fiber-optic lines was to use existing utility corridors. Selecting alternative corridors for stringing the telecommunication system would not meet the project objective of connecting to area substations for the purposes of operational controls.

Environmentally Preferable Alternative. To ensure that the proposed Abengoa project would support California water conservation practices, the CEC conducted a thorough review prior to approving the proposed project utilizing a wet-cooled process. DOE reviewed the CEC analysis in detail, and particularly focused on the following: (1) resource impacts; (2) cost considerations; and (3) conservation measures.

1. Resource impacts

Groundwater Resources. In our evaluation of whether to include a dry-cooling alternative in the Final EA, DOE considered the extensive groundwater modeling and other scientific evaluation conducted by CEC technical staff. As previously discussed, a key fact determined

in the CEC evaluation was that the Production Safe Yield is not exceeded when the water use effects of the MSP are considered. The current production of 1,731 AF/y from the Harper Valley Groundwater Basin, combined with the MSP proposed maximum pumping volume of 2,160 AF/y, yield a total production volume of 3,891 AF/y. This volume is less than the Production Safe Yield of 4,144 AF/y (leaving a remaining surplus of 253 AF/y).

As a result of their evaluation, the CEC determined that:

> The proposed groundwater use for wet-cooling will not significantly impact groundwater levels in existing Harper Valley Groundwater Basin wells, the basin balance or the quality of groundwater in the basin. (CEC Final Commission Decision, Finding of Fact # 4, p. 331).

To ensure that the health of the aquifer would be maintained into the future, CEC requires groundwater monitoring and reporting as a condition of license approval.

DOE has reviewed the potential cumulative effects that could result from the combined effects of the MSP project and other planned projects in the Centro Subarea. DOE considered the CEC's identification of reasonably foreseeable groundwater use by other proposed projects. According to this analysis, groundwater use could potentially increase by 60 AF/y and would increase cumulative future groundwater use from 2,160 AF/y to 2,220 AF/y compared with the Production Safe Yield of 4,144 AF/y (CEC Final Commission Decision, Soil and Water Table 1, *Water Allowance and Use in the Harper Lake Area*, p. 312). In consideration of these projects combined with the effects of the MSP, this would still leave approximately 193 AF/y of surplus.

The CEC concluded that the anticipated "additional level of water use is not likely to result in a cumulative lowering of groundwater levels that would exceed the threshold for protection of wells in the Harper Lake area." (Id, p. 322). DOE concurs with CEC's conclusion.

Visual and Noise Effects. Dry-cooling technology uses an air-cooled condenser that cools the steam turbine exhaust using a large array of fans that force air over heat exchangers. To dry cool the proposed project, a tall air cooled condenser would be required (between 130-150 feet in height). Such a tower would increase the visual effects beyond those incurred through a wet-cooling system. In addition, because an air-cooled condenser requires a greater number of larger fans than those in a wet- cooled system, greater noise emissions would be produced. The CEC concluded that …"on balance, the dry-cooling option does not provide substantial offsetting environmental benefit to the proposed project." (Id, p.30).

2. **Cost**

A cost analysis was conducted during the CEC process which compared the costs of wet and dry cooling technologies. Capital costs considered included, but were not limited to, increased piping and associated systems; electrical system additions; decreased evaporation pond size; and increased steam and feedwater systems. The operating impacts assessed included next-generation dry cooling; cost of water extraction; and cost of water treatment. When all factors were taken into account, the net impact of dry cooling was $52,230,000 (Abengoa Mojave Solar Plant Licensing Case, Docket #09—AFC-5, Applicants Opening Testimony, June 3, 2010, p. 182). Further, after review and analysis by CEC Staff, the CEC stated: "Dry cooling offers no performance or environmental advantages over wet cooling and would be economically unsound." (CEC Final Commission Decision, p. 32).

3. Conservation

An analysis of conservation measures was conducted as part of the CEC permitting process. The wet-cooling process of the MSP has been designed to conserve water. During the process, the lower total dissolved solids reverse osmosis eject streams will be recycled back to the service water storage tank for reuse in the cooling tower. Additionally, a clear well (a reservoir for storage of filter effluent water) will be used and when the discharge exceeds the treatment system demand, the clear well discharge will be released to the cooling tower to further conserve water. To reduce overall water consumption and sizing of evaporation ponds, service water will first be used as makeup to the cooling tower and circulating water system**.** Water conservation was discussed in subsection 2.1.1.1 of the Draft EA.

In addition to system design conservation measures, the CEC: (1) established **SOIL & WATER -6 and -7** license conditions to establish monitoring and reporting requirements to promote water conservation; and 2) requires that MSP sequester a portion of its ramp down FPA equal to its annual needs (2,160 AF/y) effectively removing a portion of the BAP from future use (Id, Soil and Water Table 4, *AMS Project's BAP and FPA*, p. 328).

DOE has reviewed the supporting documentation central to CEC's findings and decision. DOE agrees with CEC findings that …"the project's implementation of various conservation measures will result in water conservation in a manner consistent with water policy." (CEC Final Commission Decision, p.32).

EPA-7 Comment. ***EPA comments that the appendices to the document are 1,794 pages, and that the page numbering is inconsistent. EPA recommends that the Final EA include a consistent page numbering scheme for the appendices.***

EPA-7 Response:

The Final EA Appendices have been reorganized and, and in some cases reduced. Some of the studies are referred to as being on file with the DOE. All appendices have been numbered sequentially (e.g., A-1 to A-30). Page numbers have also been added to the Appendices Table of Contents.

EPA-8 Comment: ***EPA comments that the Draft EA states that "Mojave Solar considered the following criteria during site selection: (1) incoming solar radiation (insulation) value commensurate with a solar thermal project…," and recommends that the Final EA should replace (insulation) with (insolation).***

EPA-8 Response:

Comment noted. "Insulation" was replaced with "insolation" on page 2-32 of the Final EA, in Section 2.3.

EPA-9 Comment: ***EPA comments that the American Society for Testing and Materials has changed its name to ASTM International and recommends that the text should read ASTM International Standard E 1527-05PP.***

EPA-9 Response:

Comment noted. Refer to the revised text on page 3.12-5 of the Final EA, which now reads "A Phase I Environmental Site Assessment was performed in 2009 for the AMSP/Lockhart Substation site in accordance with generally and currently accepted environmental engineering principles and practices (AMST International Standard E 1527-05)."

NATIVE AMERICAN HERITAGE COMMISSION
915 CAPITOL MALL, ROOM 364
SACRAMENTO, CA 95814
(916) 653-6251
Fax (916) 657-5390
Web Site www.nahc.ca.gov
e-mail: ds_nahc@pacbell.net

Ms. Carol Hammel-Smith
United States Department Energy
1000 Independence Avenue, SW, LP-10
Washington, D.C. 20585

Re: U.S. Department of Energy Loan Guarantee to Mojave Solar, LLC for the Abengoa Mojave Solar Project; located in the Barstow area in the Mojave Desert; San Bernardino County, California

Dear Ms. Hammel-Smith:

The Native American Heritage Commission (NAHC) is the California State 'Trustee Agency' pursuant to Public Resources Code §21070 for the protection of California's Native American Cultural Resources. The NAHC is also a 'reviewing agency' for environmental documents prepared under the National Environmental Policy Act (NEPA; 42 U.S.C. 4321 *et seq*), 36 CFR Part 800.3, .5 and are subject to the Tribal and interested Native American consultation requirements of the National Historic Preservation Act, as amended (Section 106) (16 U.S.C. 470). The provisions of the Native American Graves Protection and Repatriation Act (NAGPRA) (25 U.S.C. 3001-3013) and its implementation (43 CFR Part 10.2), and California Government Code §27491 apply to this project if Native American human remains are inadvertently discovered.

The NAHC is of the opinion that the federal standards, pursuant to the above-referenced Acts and the Council on Environmental Quality (CSQ; 42 U.S.C. 4371 *et seq*) are similar to and in many cases more stringent with regard to the 'significance' of historic, including Native American items, and archaeological, including Native American items than the California Environmental Quality Act (CEQA.). In most cases, federal environmental policy require that any project that causes a substantial adverse change in the significance of an historical resource, that includes archaeological resources, is a 'significant effect' requiring the preparation of an Environmental Impact Statement (EIS).

The NAHC Sacred Lands File (SLF) search resulted in; **Native American cultural resources were not identified** in the 'area of potential effect' (APE), based on information you provided. NAHC "Sacred Sites,' are defined by the Native American Heritage Commission and the California Legislature pursuant to California Public Resources Code §§5097.94(a) and 5097.96.

Culturally affiliated tribes are to be consulted to determine possible project impacts. Early consultation with Native American tribes in your area is the best way to avoid unanticipated discoveries once a project is underway. The NAHC recommends as part of 'due diligence', that you also contact the nearest Information Center of the California Historical Resources Information System (CHRIS) of the State Historic Preservation Office (SHPO) for other possible recorded sites in or near the APE (contact the California Office of Historic Preservation at 916-445-7000). NAHC-1

Enclosed are the names of the nearest tribes that may have knowledge of cultural resources in the project area. A list of Native American contacts is attached to assist you.

It is advisable to contact the persons listed and seek to establish a 'trust' relationship with them; if they cannot supply you with specific information about the impact on cultural resources, they may be able to refer you to another tribe or person knowledgeable of the cultural resources in or near the affected project area.

Lack of surface or subsurface evidence of archeological resources does not preclude the existence of archeological resources. Lead agencies should consider avoidance, in the case of cultural resources that are discovered. A tribe or Native American individual may be the only source of information about a cultural resource; this is consistent with the NHPA Section 106 Guidelines amended in 2009. Also, federal Executive Orders Nos. 11593 (preservation of cultural environment), 13175 (coordination & consultation) and 13007 (Sacred Sites) are helpful

NAHC-1 cont.

NEPA regulations provide for provisions for accidentally discovered archeological resources during construction and mandate the processes to be followed in the event of an accidental discovery of any human remains in a project location other than a 'dedicated cemetery. Even though a discovery may be in federal property, California Government Code §27460 should be followed in the event of an accidental discovery of human remains during any groundbreaking activity; in such cases California Government Code §27491 and California Health & Safety Code §7050.5 may apply.

If you have any questions about this response to your request, please do not hesitate to contact me at (916) 653-6251.

Sincerely,

Dave Singleton
Program Analyst

Cc: State Clearinghouse

Attachment: Native American Contacts list for Consultation

Native American Contact List
San Bernardino County
April 29, 2011

Ramona Band of Cahuilla Mission Indians
Joseph Hamilton, Chairman
P.O. Box 391670 — Cahuilla
Anza , CA 92539
admin@ramonatribe.com
(951) 763-4105
(951) 763-4325 Fax

Ron Wermuth
P.O. Box 168 — Tubatulabal
Kernville , CA 93238 — Kawaiisu
warmoose@earthlink.net — Koso
(760) 376-4240 - Home — Yokuts
(916) 717-1176 - Cell

San Manuel Band of Mission Indians
James Ramos, Chairperson
26569 Community Center Drive — Serrano
Highland , CA 92346
(909) 864-8933
(909) 864-3724 - FAX
(909) 864-3370 Fax

Colorado River Reservation
Ginger Scott, Acting Cultural Contact
26600 Mojave Road — Mojave
Parker , AZ 85344 — Chemehuevi
symi@rraz.net
(928) 669-9211
(928) 669-5675 Fax

Chemehuevi Reservation
Charles Wood, Chairperson
P.O. Box 1976 — Chemehuevi
Chemehuevi Valley CA 92363
chair1cit@yahoo.com
(760) 858-4301
(760) 858-5400 Fax

San Fernando Band of Mission Indians
John Valenzuela, Chairperson
P.O. Box 221838 — Fernandeño
Newhall , CA 91322 — Tataviam
tsen2u@hotmail.com — Serrano
(661) 753-9833 Office — Vanyume
(760) 885-0955 Cell — Kitanemuk
(760) 949-1604 Fax

Fort Mojave Indian Tribe
Tim Williams, Chairperson
500 Merriman Ave — Mojave
Needles , CA 92363
(760) 629-4591
(760) 629-5767 Fax

AhaMaKav Cultural Society, Fort Mojave Indian
Linda Otero, Director
P.O. Box 5990 — Mojave
Mohave Valley AZ 86440
(928) 768-4475
LindaOtero@fortmojave.com
(928) 768-7996 Fax

This list is current only as of the date of this document.

Distribution of this list does not relieve any person of the statutory responsibility as defined in Section 7050.5 of the Health and Safety Code, Section 5097.94 of the Public Resources Code and Section 5097.98 of the Public Resources Code.

This list is only applicable for contacting local Native Americans with regard to cultural resources for the proposed sCH#2011044002; NEPA Notice of Completion; Environmental Assessment & Finding of No Significant Impact (EA/FONSI) for the Abengoa Mojave Solar Project; located in the Mojave Desert of San Bernardino County, California.

Native American Contact List
San Bernardino County
April 29, 2011

Morongo Band of Mission Indians
Michael Contreras, Cultural Heritage Prog.
12700 Pumarra Road — Cahuilla
Banning , CA 92220 — Serrano
(951) 201-1866 - cell
mcontreras@morongo-nsn.gov
(951) 922-0105 Fax

Kern Valley Indian Council
Robert Robinson, Co-Chairperson
P.O. Box 401 — Tubatulabal
Weldon , CA 93283 — Kawaiisu
brobinson@iwvisp.com — Koso
(760) 378-4575 (Home) — Yokuts
(760) 549-2131 (Work)

San Manuel Band of Mission Indians
Ann Brierty, Policy/Cultural Resources Departmen
26569 Community Center. Drive — Serrano
Highland , CA 92346
(909) 864-8933, Ext 3250
abrierty@sanmanuel-nsn.gov
(909) 862-5152 Fax

Ernest H. Siva
Morongo Band of Mission Indians Tribal Elder
9570 Mias Canyon Road — Serrano
Banning , CA 92220 — Cahuilla
siva@dishmail.com
(951) 849-4676

Fort Mojave Indian Tribe
Nora McDowell, Cultural Resources Coordinator
500 Merriman Ave — Mojave
Needles , CA 92363
g.goforth@fortmojave.com
(760) 629-4591
(760) 629-5767 Fax

Serrano Nation of Indians
Goldie Walker
P.O. Box 343 — Serrano
Patton , CA 92369

(909) 862-9883

This list is current only as of the date of this document.

Distribution of this list does not relieve any person of the statutory responsibility as defined in Section 7050.5 of the Health and Safety Code, Section 5097.94 of the Public Resources Code and Section 5097.98 of the Public Resources Code.

This list is only applicable for contacting local Native Americans with regard to cultural resources for the proposed sCH#2011044002; NEPA Notice of Completion; Environmental Assessment & Finding of No Significant Impact (EA/FONSI) for the Abengoa Mojave Solar Project; located in the Mojave Desert of San Bernardino County, California.

State of California Native American Heritage Commission, May 10, 2011

NAHC-1 Comment: ***The NAHC comments that the NAHC Sacred Lands File search did not identify Native American cultural resources in the 'area of potential effect.' A list of names of the nearest Tribes was provided for DOE's use in tribal consultation, and NAHC recommends that provisions for accidentally discovered archeological resources be followed.***

NAHC-1 Response:

Comment so noted. In consultation with the Tribes, DOE and BLM did not identify sacred sites or traditional cultural properties within the proposed Project area.

The list of Native American tribes attached to the NAHC comment letter are consistent with the list of tribal contacts made during the EA process, and during the prior Application for Certification process with the California Energy Commission for the Solar Plant. The tribal contacts are documented in the *Cultural Resources Class III Survey Report for the Proposed Mojave Solar Project and Lockhart Substation Connection & Communication Facilities, San Bernardino County California, submitted to the Bureau of Land Management and Department of Energy in March 2011*. The confidential Class III is on file with the Bureau of Land Management; contact Jim Shearer, BLM Archaeologist, 760.252.6034, JShearer@blm.gov.

The EA includes provisions for the accidental discovery of resources during construction. To provide for avoidance of resources and adverse effects, several measures were proposed, including preparation of a Monitoring Plan prior to start of construction and all subsurface ground-disturbing activities. Refer to Condition of Certification CUL-3 in Appendix S for the monitoring plan requirements. The Monitoring Plan will include provisions for inclusion of Native American representatives during the construction monitoring and stop-work protocols in the unanticipated event resources are discovered to allow for coordination with BLM. A Cultural Resources Report (monitoring report) documenting the monitoring efforts will be prepared and submitted to BLM when the construction is completed. Refer to Condition of Certification CUL-4 in Appendix S for the specific report requirements.